INSTRUCTIONAL BUILDING No.2

COMPTON COMMUNITY COLLEGE DISTRICT

1111 E. ARTESIA BLVD.,
COMPTON, CA

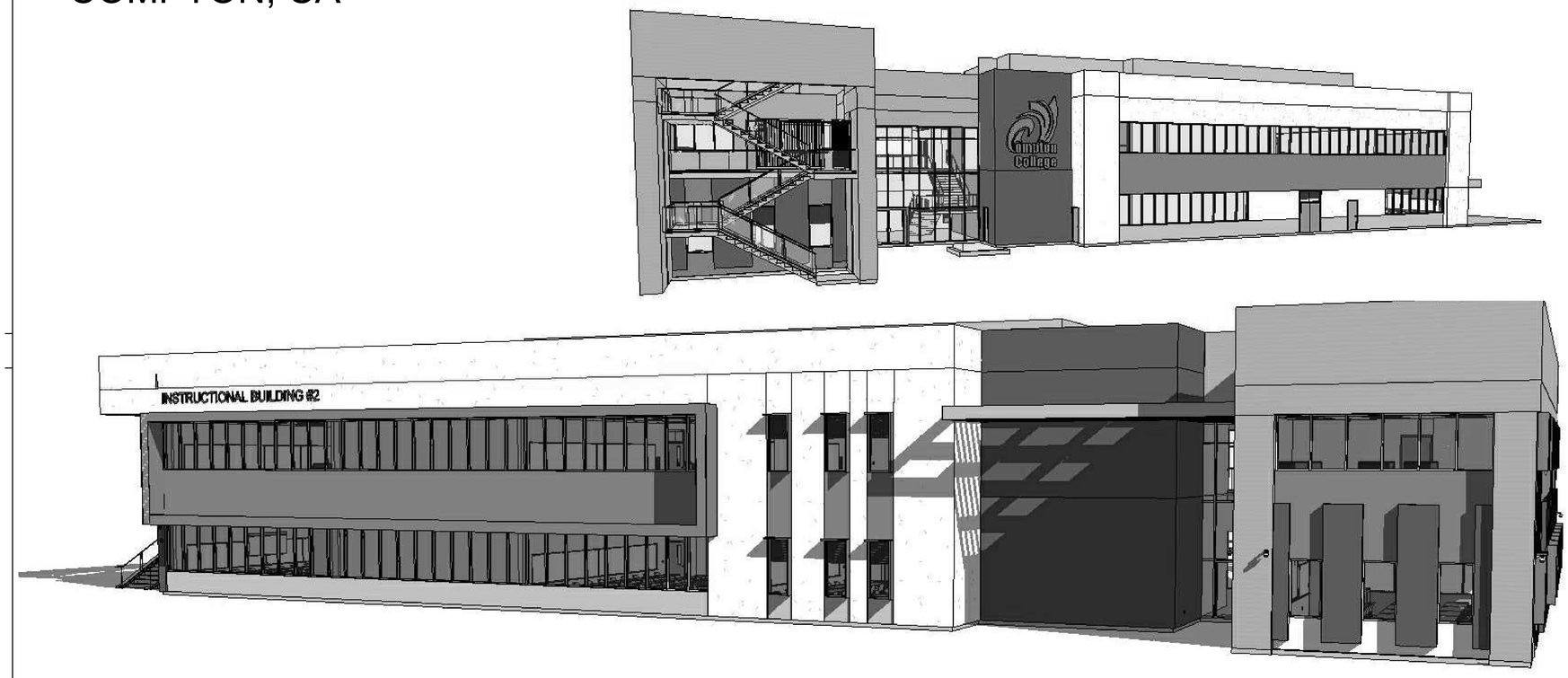

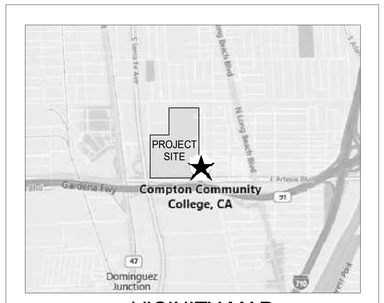

VICINITY MAP

AREA MAP

NORTH

DSA BACKCHECK

April 8, 2019

tBP / Architecture

4611 Teller Avenue - Newport Beach - California - 92660
http://www.tbparchitecture.com
ph: 949.673.0300 - fx: 949.732.3895

OWNER
COMPTON COMMUNITY COLLEGE DISTRICT
1111 E. ARTESIA BOULEVARD
COMPTON, CA. 90221
PHONE NO. - (310) 900-1600

CIVIL ENGINEER
FPL AND ASSOCIATES, INC.
30 CORPORATE PARK, SUITE 401
IRVINE, CA 92606
PHONE NO. - (949)252-1688
FAX NO. - (949) 252-0088

STRUCTURAL ENGINEER
VCA ENGINEERS INC.
2151 MICHELSON DRIVE #240
IRVINE, CA 92612
PHONE NO. - (949) 679-0870
FAX NO. - (949) 679-9370

INTERIOR DESIGN
PAL id studio, Inc.
118 E. AMERIGE AVE.
FULLERTON, CA 92832
PHONE NO. - (714) 870-6500

GEOTECHNICAL ENGINEER
UNITED-HEIDER INSPECTION GROUP
22620 GOLDENCREST DRIVE
MORENO VALLEY, CA 02553
PHONE NO. - (951) 850-7436

LANDSCAPE ARCHITECT
AHBE LANDSCAPE ARCHITECTS
617 WEST SEVENTH ST., STE. 304
LOS ANGELES, CA 90017
PHONE NO. - (213) 694-3800

PLUMBING & MECHANICAL ENGINEER
CAPITAL ENGINEERING CONSULTANTS, INC.
11020 SUN CENTER DRIVE #100
RANCHO CORDOVA, CA 95670
PHONE NO. - (916) 851-3500

ELECTRICAL ENGINEER
FBA ENGINEERING
150 PAULARINO AVENUE, SUITE A120
COSTA MESA, CA 92626
PHONE NO. - (949) 852-9992
FAX NO. - (949) 853-1657

tBP
Architecture
Planning
Interiors

IDENTIFICATION STAMP
DIV. OF THE STATE ARCHITECT
APP. 03-119458 INC:
REVIEWED FOR
SS ☑ FLS ☑ ACS ☑
DATE:05/23/2019

DIVISION OF THE STATE ARCHITECT
355 South Grand Avenue, Suite 2100
Los Angeles, CA 90012
ph: (213) 897-3995 fx:(213) 897-3159

agency

tBP architecture planning interiors

LICENSED ARCHITECT
STATE OF CALIFORNIA

tBP/Architecture
4611 Teller Avenue
Newport Beach, CA 92660
ph: 949.673.0300 fx: 949.732.3895

architect

consultant

COMPTON COLLEGE
INSTRUCTIONAL BUILDING No.2
COMPTON COMMUNITY COLLEGE DISTRICT
1111 E. ARTESIA BLVD. COMPTON, CA.

owner

tBP project number: 20998.00
file name:
drawn by: checked by:
date: 04/08/2019

rev:	date:	description:

THIS DRAWING AND THE DESIGNS, DEPICTIONS, IDEAS AND OTHER INFORMATION CONTAINED HEREIN CONSTITUTE UNPUBLISHED WORK OF tBP/ARCHITECTURE AND SHALL REMAIN PROPERTY OF tBP/ARCHITECTURE IN PERPETUITY. NO PART THEREOF SHALL BE REPRODUCED, DISCLOSED, DISTRIBUTED, SOLD, PUBLISHED OR OTHERWISE USED IN ANY WAY WITHOUT THE ADVANCED EXPRESS WRITTEN CONSENT OF tBP/ARCHITECTURE.

drawing title:
COVER SHEET

drawing no.:
T-1

drawing of

4/8/2019 2:15:57 PM

ABBREVIATIONS

&	AND
∠	ANGLE
@	AT
℄	CENTERLINE
ϕ	DIAMETER OR ROUND
#	NUMBER
AB	ANCHOR BOLT
AC	ASPHALTIC CONCRETE
ACT	ACOUSTICAL TILE
ACOUS	ACOUSTICAL
AD	AREA DRAIN
ADH	ADHESIVE
ADJ	ADJACENT
AESS	ARCHITECTURAL EXPOSED STRUCTURAL STEEL
AFF	ABOVE FINISH FLOOR
AFP	ACCORDIAN FOLDING PARTITION
AGGR	AGGREGATE
ALT	ALTERNATE
ALUM	ALUMINUM
AMP	AMPERE
ANOD	ANODIZED
APPROX	APPROXIMATELY
ARCH	ARCHITECT
ASB	ASBESTOS
ASSY	ASSEMBLY
BAT	BATTERY
BBD	BULLETIN BOARD
BD	BOARD
BLDG	BUILDING
BLKG	BLOCKING
BLO	BLOWER
BLR	BOILER
BLW	BELOW
BM	BEAM
BO	BOTTOM OF
BRKR	BREAKER
BUR	BUILT UP ROOF
BTU	BRITISH THERMAL UNIT
CAB	CABINET
CARP	CARPET
CAT	CATALOG
CB	CATCH BASIN
CEM	CEMENT
CF	CURB FACE
CFM	CUBIC FEET PER MINUTE
CHBD	CHALKBOARD
CHEM	CHEMICAL
CHWR	CHILLED WATER RETURN
CHWS	CHILLED WATER SUPPLY
CI	CAST IRON
CIR	CIRCLE
CJ	CONTROL JOINT
CL	CENTERLINE
CLG	CEILING
CLO	CLOSET
CLRM	CLASSROOM
CMT	CERAMIC MOSAIC TILE
CMU	CONCRETE MASONRY UNIT
CND	CONDUIT
CO	CLEANOUT
COL	COLUMN
COMM	COMMUNICATION
COMP	COMPOSITION
CONC	CONCRETE
CONF	CONFERENCE
CONN	CONNECTION
CONT	CONTINUOUS
CONTR	CONTRACTOR
COORD	COORDINATE
CORR	CORRIDOR
COV	COVER
CP	CONTROL PANEL
CR	CONDENSATE RETURN
CSWK	CASEWORK
CT	CERAMIC TILE
CTV	CABLE TELEVISION
CW	COLD WATER
DBL	DOUBLE
DEMO	DEMOLITION
DEPT	DEPARTMENT
DET	DETAIL
DF	DRINKING FOUNTAIN
DIA	DIAMETER
DIM	DIMENSION
DISP.	DISPENSER
DIST.	DISTANCE
DIV.	DIVISION
D.L.	DEAD LOAD
DN.	DOWN
DS.	DOWN SPOUT
DWG.	DRAWING
EA.	EACH
EL	EASEMENT LINE
E.J.	EXPANSION JOINT
ELEC.	ELECTRICAL
ELEV.	ELEVATION
EMER.	EMERGENCY
ENCL.	ENCLOSURE
ENG	ENGINEER
ENGY	ENERGY
ENTR	ENTRANCE
EP	EPOXY ENAMEL
EPG	EPOXY PAINT GLOSS
EPSG	EPOXY PAINT SEMI-GLOSS
EQ.	EQUAL
EQUIP.	EQUIPMENT
EST.	ESTIMATE
E.W.C.	ELECTRIC WATER COOLER
EWH	ELECTRIC WATER HEATER
EXH	EXHAUST
EXIST.	EXISTING
EXP.	EXPANSION
EXT.	EXTERIOR
F	FACTORY FINISH
F.A.	FIRE ALARM
FC	FOOTCANDLE
F.D.	FLOOR DRAIN
FDC	FIRE DEPARTMENT CONNECTION
FDN	FOUNDATION
F.E.	FIRE EXTINGUISHER
F.E.C.	FIRE EXTINGUISHER CABINET
FFP	FOLDING FABRIC PARTITION
F.G.	FINISH GRADE
F.H.	FIRE HYDRANT
FIN.	FINISH
FIN. FLR.	FINISH FLOOR
FLASH.	FLASHING
FLR.	FLOOR
FLUOR.	FLUORESCENT
F.O.	FACE OF
F.O.C.	FACE OF CONCRETE
F.O.F.	FACE OF FINISH
F.O.S.	FACE OF STUD
FPP	FOLDING PANEL PARTITION
FPW	FOLDING PANEL WOOD DOOR
F.R.A.	FIRE RATED ASSEMBLY
F.R.P.	FIBERGLASS REINFORCED PANEL
F.S.	FLOOR SINK
FT.	FOOT OR FEET
FTG.	FOOTING
FURR.	FURRING
FXTR	FIXTURE
GA.	GAGE
GALV.	GALVANIZED
GB	GRAB BAR
G.F.R.C.	GLASS FIBER REINFORCED CEMENT
GL.	GLASS
GLU.LAM.	GLUE LAMINATED
GND.	GROUND
GPM	GALLONS PER MINUTE
GR	GRADE
G.R.G.	GLASSFIBREFORCED GYPSUM
GYP.	GYPSUM
H.B.	HOSE BIB
HCN	HOLLOW CORE NATURAL FINISH
HCP	HOLLOW CORE PAINT FINISH
HDBD	HARDBOARD
HDR	HEADER
HDW.	HARDWARE
HDWD.	HARDWOOD
HGT.	HEIGHT
H.M.	HOLLOW METAL
HORIZ.	HORIZONTAL
HP	HORSEPOWER
HR.	HOUR
HSTAT	HUMIDISTAT
HTG.	HEATING
HTWR	HOT WATER RETURN
HTWS	HOT WATER SUPPLY
HVAC	HEATING, VENTILATING, AIR CONDITIONING
HVY	HEAVY
HW	HOT WATER
I.D.	INSIDE DIAMETER
INSUL.	INSULATION
INT.	INTERIOR
INV.	INVERT
IW	IRRIGATION WATER
JAN.	JANITOR
JCT.	JUNCTION
JT.	JOINT
K	KIP (1000 LB)
KIT.	KITCHEN
KO	KNOCKOUT
KVA	KILOVOLT AMPERE
LAB.	LABORATORY
LAV.	LAVATORY
LB.	POUND
LDG	LANDING
LL	LIVE LOAD
LT	LIGHT
LTG	LIGHTING
LVL	LEVEL
LVR	LOUVER
M	METER
MAINT	MAINTENANCE
MAN	MANUAL
MAS	MASONRY
MATL.	MATERIAL
MAX.	MAXIMUM
M.C.	MEDICINE CABINET
MCC	MOTOR CONTROL CENTER
MECH.	MECHANICAL
MED	MEDIUM
MEZZ	MEZZANINE
MFR.	MANUFACTURER
MH	MANHOLE
MIN.	MINIMUM
MIR	MIRROR
MISC.	MISCELLANEOUS
MKR	MARKER
MTL.	METAL
MTD.	MOUNTED
MUL.	MULLION
MVBL	MOVABLE
N.	NORTH
NAT.	NATURAL
NEG	NEGATIVE
N.I.C.	NOT IN CONTRACT
NO.	NUMBER
NOM.	NOMINAL
N.T.S.	NOT TO SCALE
O.A.	OVERALL
OBS.	OBSCURE
O.C.	ON CENTER
O.D.	OUTSIDE DIAMETER
O.F.	OVERFLOW DRAIN
OFCI	OWNER FURNISHED-CONTRACTOR INSTALLED
OFF	OFFICE
OFOI	OWNER FURNISHED-OWNER INSTALLED
OPNG.	OPENING
OPP.	OPPOSITE
OVHD	OVERHEAD
PART.	PARTITION
PB	PULL BOX
PBD	PARTICLEBOARD
PC	PORTLAND CEMENT
PERF	PERFORATED
PERP	PERPENDICULAR
PE	PAINT EGGSHELL
PF	PAINT FLAT
PG	PAINT GLOSS
PH	PHASE
PIV	POST INDICATOR VALVE
P.L.	PROPERTY LINE
PLAS.	PLASTER
PLAT.	PLATFORM
PLBG	PLUMBING
PLF	POUNDS PER LINEAR FOOT
PLYWD.	PLYWOOD
PNL	PANEL
POS	POSITIVE
PP	PORTABLE PARTITION
PR.	PAIR
PREFAB	PREFABRICATED
PREFIN	PREFINISHED
PRELIM	PRELIMINARY
PROJ	PROJECT
PSF	POUNDS PER SQUARE FOOT
PSG	PAINT SEMI-GLOSS
PSI	POUNDS PER SQUARE INCH
PVC	POLYVINYL CHLORIDE
Q.T.	QUARRY TILE
QTY	QUANTITY
R.	THERMAL RESISTANCE
RAD.	RADIUS
R.D.	ROOF DRAIN
RDWD.	REDWOOD
REF.	REFERENCE
REFR.	REFRIGERATOR
REG.	REGISTER
REINF.	REINFORCING
REQD.	REQUIRED
RESIL.	RESILIENT
RET	RETURN
REV.	REVERSE
RFG	ROOFING
RM.	ROOM
R.O.	ROUGH OPENING
S	SEALER
S.B.	SPLASH BLOCK
S.C.	SOLID CORE
SCN	SOLID CORE
S.C.	SOLID CORE
SCHED.	SCHEDULE
S.C.	SOLID CORE
S.C.	SOLID CORE
S.D.	STORM DRAIN
SECT.	SECTION
SF	STAIN FINISH
SFL	STAIN FINISH W/ LACQUER
SFV	STAIN FINISH W/ VARNISH
SHT.	SHEET
SIM.	SIMILAR
SPEC.	SPECIFICATIONS
SPLY	SUPPLY
SQ.	SQUARE
SR	STEAM RETURN
SS	STEAM SUPPLY
S.SK.	SERVICE SINK
SST.	STAINLESS STEEL
ST	STREET
STAG	STAGGERED
STC	SOUND TRANSMISSION CLASS
STD.	STANDARD
STL.	STEEL
STM	STEAM
STOR	STORAGE
STRUCT.	STRUCTURAL
SURF	SURFACE
SUSP.	SUSPENDED
SWBD	SWITCHBOARD
SWGR	SWITCHGEAR
SWR	SEWER
SYM.	SYMBOL
SYS	SYSTEM
T.	THERMOSTAT
T. & B.	TOP AND BOTTOM
T. & G.	TONGUE AND GROOVE
T.C.	TOP OF CURB
TCN	TOP OF CONCRETE
TG	TOP OF GRATE
TW	TOP OF WALL
TD	TRENCH DRAIN
TECH	TECHNICAL
TEL.	TELEPHONE
TEMP.	TEMPERATURE
THK	THICK
THRES.	THRESHOLD
THRU	THROUGH
TKBD	TACKBOARD
T.O.	TOP OF
T.O.C.	TOP OF CONCRETE
T.O.S.	TOP OF STEEL
TOT	TOTAL
TR.	TREAD
TRNSF.	TRANSFORMER
TYP.	TYPICAL
U	HEAT TRANSFER COEFFICIENT
UGND	UNDERGROUND
UNFIN.	UNFINISHED
U.N.O.	UNLESS NOTED OTHERWISE
U.O.S.	UNDERSIDE OF STRUCTURE
UPG	URETHANE PAINT GLOSS
UPSG	URETHANE PAINT SEMI-GLOSS
UR.	URINAL
UTIL	UTILITY
V	VOLT
VAC	VACUUM
VAV	VARIABLE AIR VOLUME
V.C.T.	VINYL COMPOSITION TILE
VERT.	VERTICAL
VEST.	VESTIBULE
W	WATT
W/	WITH
W.C.	WATER CLOSET
WD.	WOOD
WDW.	WINDOW
WHSE	WAREHOUSE
WL	WIND LOAD
WLD	WELDED
WP	WORKING POINT
WPG	WATERPROOFING
WR	WATER RESISTANT
WSCT.	WAINSCOT
WT	WEIGHT
W.W.F.	WELDED WIRE FABRIC
XFMR	TRANSFORMER

SHEET INDEX

SHEET NUMBER	SHEET NAME
(NO. OF SHEETS - 4)	GENERAL
T-1	COVER SHEET
T-2	SHEET INDEX AND GENERAL INFO.
T-3	CODE ANALYSIS
T-4	FIRE ACCESS SITE PLAN
(NO. OF SHEETS - 8)	CIVIL DRAWINGS
C1.0	SITE IMPROVEMENT PLAN TITLE SHEET
C1.1	DEMOLITION PLAN
C1.2	GRADING PLAN
C1.3	GRADING DETAILS
C1.4	GRADING DETAILS
C1.5	UTILITY PLAN
C1.6	UTILITY DETAILS
C1.7	UTILITY DETAILS
(NO. OF SHEETS -13)	LANDSCAPE DRAWINGS
L1.00	LANDSCAPE CONSTRUCTION SCHEDULE
L1.11	LANDSCAPE CONSTRUCTION PLAN
L1.31	LANDSCAPE CONSTRUCTION ENLARGEMENT PLAN
L1.32	LANDSCAPE CONSTRUCTION ENLARGEMENT PLAN
L1.51	LANDSCAPE CONSTRUCTION DETAILS
L1.52	LANDSCAPE CONSTRUCTION DETAILS
L2.00	IRRIGATION LEGEND AND NOTES
L2.11	IRRIGATION PLAN
L2.51	IRRIGATION DETAILS
L2.52	IRRIGATION DETAILS
L3.00	LANDSCAPE PLANTING LEGEND & NOTES
L3.11	LANDSCAPE PLANTING PLAN
L3.51	LANDSCAPE PLANTING DETAILS
(NO. OF SHEETS - 5)	ARCHITECTURAL SITE DRAWINGS
AS-1	SITE PLAN
AS-2	ENLARGED SITE PLAN
AS-3	ENLARGED SITE PLAN AND SECTION
AS-4	EXIST. EXT. CLG PLANS & EXT. ELEVATIONS
AS-5	ENLARGED SITE PLANS
(NO. OF SHEETS - 19)	ARCHITECTURAL DRAWINGS
A1-1	FLOOR PLAN - FIRST FLOOR
A1-2	FLOOR PLAN - SECOND FLOOR
A2-1	REFLECTED CEILING PLAN - FIRST FLOOR
A2-2	REFLECTED CEILING PLAN - SECOND FLR.
A3-1	ROOF PLAN
A4-1	EXTERIOR ELEVATIONS
A4-2	EXTERIOR ELEVATIONS
A5-1	BUILDING SECTIONS
A5-2	BUILDING SECTIONS
A6-1	WALL SECTIONS
A7-1	ENLARGED PLANS - TOILET RMS. / JAN.
A7-2	TOILET RMS. FIRST FLOOR - INTERIOR ELEVATIONS
A8-1	ENLARGED PLANS & SECTIONS - STAIRS
A8-2	ENLARGED PLANS/ SECTIONS STAIR 3
A9-1	INTERIOR ELEVATIONS
A9-2	INTERIOR ELEVATIONS
A10-1	ELEVATOR PLANS / SECTIONS
A12-1	SIGNAGE PLAN - FIRST FLOOR
A12-2	SIGNAGE PLAN - SECOND FLOOR
(NO. OF SHEETS - 33)	ARCHITECTURAL DETAILS
2.01	SITE DETAILS
3.01	EXTERIOR WALL DETAILS
3.02	EXTERIOR WALL ALUM. COMPOSITE PANELS
3.20	COLUMN DETAILS
3.21	COLUMN DETAILS
3. 21	EXTERIOR WALL COLUMN DETAILS
4.01	METAL STUD PARTITION TYPES
4.02	METAL STUD PARTITION FIRESTOP DETAILS
4.03	INTERIOR METAL STUD PARTITION DETAILS
5.01	CEILING DETAILS - INTERIOR CEILINGS
5.02	CEILING DETAILS
6.01	TYPICAL CASEWORK DETAILS
7.01	ROOF DETAILS
7.02	ROOF DETAILS
7.03	ROOF DETAILS
8.01	DOOR SCHEDULE
8.10	DOOR DETAILS
8.11	INTERIOR STOREFRONT AND SLIDING DOOR DETAILS
8.20	WINDOW WALL DETAILS
8.21	STOREFRONT DETAILS
8.22	CURTAIN WALL DETAILS
8.50	WINDOW SCHEDULE - EXTERIOR WINDOWS
8.51	WINDOW SCHEDULE - INTERIOR WINDOWS
9.01	FINISH SCHEDULE
9.02	CEILING DETAILS - INTERIOR CEILINGS
9.03	1ST. FLOOR FINISH PLAN
9.04	2ND FLOOR FINISH PLAN
9.05	RESTROOM WALL AND FLOOR TILE PATTERN PLAN
11.01	SIGNAGE DETAILS
11.02	SIGNAGE DETAILS
13.01	STAIR #1 DETAILS
13.02	STAIR DETAILS
14.01	ELEVATOR DETAILS
(NO. OF SHEETS - 27)	STRUCTURAL DRAWINGS
S0-0.1	GENERAL NOTES
S0-0.2	GENERAL NOTES
S0-1.1	TYPICAL DETAILS
S0-1.2	TYPICAL DETAILS
S0-1.3	TYPICAL DETAILS
S0-1.3A	TYPICAL DETAILS
S0-1.4	TYPICAL DETAILS
S0-1.4A	TYPICAL DETAILS
S0-1.5	TYPICAL DETAILS
S0-1.6	TYPICAL DETAILS
S0-1.7	TYPICAL DETAILS
S0-1.8	TYPICAL DETAILS
S0-1.9	TYPICAL DETAILS
S0-1.10	TYPICAL DETAILS
S0-1.11	TYPICAL DETAILS
S0-1.11A	BRBF DETAILS
S0-1.11B	BRBF DETAILS
S2-1	MAT SLAB PLAN
S2-2	GROUND FLOOR SLAB PLAN
S3-1	2ND FLOOR FRAMING PLAN
S3-2	ROOF FRAMING PLAN
S4-0.1	FOUNDATION DETAILS
S4-0.2	FOUNDATION DETAILS
S5-0.1	FRAMING DETAILS
S5-0.2	FRAMING DETAILS
S5-0.3	FRAMING DETAILS
S6-1	FRAME ELEVATIONS
(NO OF SHEETS - 24)	MECHANICAL DRAWINGS
M0-1	GENERAL NOTES, LEGENDS & ABBREVIATIONS
M0-2	MECHANICAL SCHEDULES
M0-3	TITLE 24 COMPLIANCE
M0-4	TITLE 24 COMPLIANCE
M0-5	TITLE 24 COMPLIANCE
M0-6	MECHANICAL SITE PLAN
MZ1-1	MECH. ZONING PLAN 1ST FLOOR PLAN
MZ1-2	MECH. ZONING PLAN 2ND FLOOR PLAN
M1-1	MECH. 1ST FLOOR PLAN
M1-2	MECH. 2ND FLOOR PLAN
M3-1	MECH. ROOF PLAN
M4-1	MECHANICAL SECTIONS
M5-1	CONTROLS
M5-2	CONTROLS
M5.3	CONTROLS
M7-1	DETAILS
M7-2	DETAILS
M7-3	DETAILS
M7-4	DETAILS
M7-5	DETAILS
M7-6	DETAILS
MP1-1	MECH. PIPING 1ST FLOOR PLAN
MP1-2	MECH. PIPING 2ND FLOOR PLAN
MP3-1	MECH. PIPING ROOF PLAN
(NO. OF SHEETS - 14)	PLUMBING DRAWINGS
P0-1	GENERAL NOTES, LEGENDS & ABBREV.
P0-2	PLUMBING SCHEDULES
P0-3	PLUMBING SITE PLAN
P1-1	PLUMBING FIRST FLOOR PLAN - GRAVITY
P1-2	PLUMBING FIRST FLOOR PLAN - PRESSURE
P2-1	PLUMBING SECOND FLOOR PLAN - GRAVITY
P2-2	PLUMBING SECOND FLOOR PLAN - PRESSURE
P3-1	PLUMBING ROOF PLAN
P4-1	PLUMBING ENLARGED PLANS
P4-2	PLUMBING ENLARGED PLANS
P5-1	PLUMBING HOT & COLD WATER AND WASTE & VENT RISER DIAGRAMS
P5-2	PLUMBING NATURAL GAS & STORM DRAIN RISER DIAGRAMS
P7-1	PLUMBING DETAILS
P7-2	PLUMBING DETAILS
(NO. OF SHEETS - 9)	FIRE PROTECTION DRAWINGS
FP0-1	GENERAL NOTES, LEGENDS & ABBREVIATIONS
FP0-2	SITE PLAN
FP1-1	FLOOR PLAN - FIRST FLOOR
FP1-2	FLOOR PLAN - SECOND FLOOR
FP2-1	RCP - FIRST FLOOR
FP2-2	RCP - SECOND FLOOR
FP5-1	BUILDING SECTIONS
FP6-1	ISOMETRIC VIEWS
FP-7-1	DETAILS
(NO OF SHEETS - 35)	ELECTRICAL DRAWINGS
E0-0.1	SYMBOL LIST, NOTES AND DETAILS
E0-0.2	SINGLE LINE DIAGRAM
E0-0.2A	SINGLE LINE DIAGRAM
E0-0.3	LIGHTING FIXTURE SCHEDULE & NOTES
E0-0.4	ENLARGED ELECTRICAL ROOMS
E0-0.5	ELECT. ANCHORAGE DETAILS
E0-0.6	ELECT. ANCHORAGE DETAILS
ES-1.0	SITE ELECTRICAL DEMOLITION PLAN
ES-1.1	OVERALL SITE ELECTRICAL PLAN
ES-1.2	ENLARGED SITE ELECTRICAL PLAN
ES-1.3	ENLARGED SITE LIGHTING PLAN
E1-1.1	FIRST FLOOR LIGHTING PLAN
E1-2.1	SECOND FLOOR LIGHTING PLAN
E2-1.1	FIRST FLOOR POWER PLAN
E2-2.1	SECOND FLOOR POWER PLAN
E2-2.2	ELECTRICAL ROOF PLAN
E3-1.1	PANEL SCHEDULES
E3-1.2	PANEL SCHEDULES
E3-1.3	ENERGY FORMS
E3-1.4	ENERGY FORMS
EF-0.1	FIRE ALARM SYMBOLS & DETAILS
EF-0.2	FIRE ALARM CALCULATIONS
EF-0.3	FIRE ALARM RISER DIAGRAMS
EF-1.0	ENLARGED SITE FIRE ALARM PLAN
EF-1.1	FIRST FLOOR FIRE ALARM PLAN
EF-2.1	SECOND FLOOR FIRE ALARM PLAN
ET-0.1	TELECOM SYMBOL LIST
ET-0.2	ENLARGED TELECOM ROOMS
ET-0.3	TELECOM RISER DIAGRAMS
ET-0.4	TELECOM DETAILS
ET-0.5	TELECOM DETAILS
ET-06	AV WIRING DIAGRAMS
ET-1.0	ENLARGED SITE TELECOM PLAN
ET-1.1	FIRST FLOOR TELECOM PLAN
ET-2.1	SECOND FLOOR TELECOM PLAN
(NO OF SHEETS - 35)	ALUMINUM STOREFRONT DOORS AND SUNSHADE SHOP DRAWINGS
CW0.01	COVER SHEET
CW0.02	GENERAL NOTES
CW0.04	SECTION PROPERTIES
CW0.05	SECTION PROPERTIES
C W2.01	ELEVATION AR600
CW3.01	ELEVATION OPG 1500
CW3.02	ELEVATION OPG 1500
CW3.03	ELEVATION OPG 1500
CW3.04	ELEVATION OPG 1900
CW3.05	ELEVATION OPG 1900
CW3.06	ELEVATION TC 470
CW4.01	HORIZONTAL DETAILS (OPG-1900)
CW4.01A	HORIZONTAL DETAILS (OPG-1900)
CW4.02	HORIZONTAL DETAILS (OPG-1900)
CW4.03	HORIZONTAL DETAILS (OPG-1900)
CW5.01	VERTICAL DETAILS (OPG-1900)
CW5.02	VERTICAL DETAILS (OPG-1900)
CW5.03	VERTICAL DETAILS (OPG-1900)
CW6.01	HORIZONTAL DETAILS (OPG-1500)
CW6.02	HORIZONTAL DETAILS (OPG-1500)
CW7.01	VERTICAL DETAILS (OPG-1500)
CW7.02	VERTICAL DETAILS (OPG-1500)
CW8.01	HORIZONTAL DETAILS (TC470)
CW8.02	HORIZONTAL DETAILS (TC470)
CW8.03	HORIZONTAL DETAILS (TC470)
CW8.04	HORIZONTAL DETAILS (TC470)
CW8.05	HORIZONTAL DETAILS (OPG1500)
CW8.06	HORIZONTAL DETAILS (TC470)
CW9.01	VERTICAL DETAILS (TC-470)
CW9.02	VERTICAL DETAILS (TC-470)
CW9.03	VERTICAL DETAILS (TC-470)
CW10.01	HORIZONTAL DETAILS AR600
CW11.01	VERTICAL DETAILS AR600

TOTAL NUMBER OF DRAWING SHEETS: 226

Statement of General Conformance
FOR ARCHITECTS/ENGINEERS WHO UTILIZE PLANS,

INCLUDING BUT NOT LIMITED TO SHOP DRAWINGS, PREPARED BY OTHER LICENSED DESIGN PROFESSIONALS AND/OR CONSULTANTS

(Application No. 03-119458 File No. 19 - C1

☒ The drawings or sheets listed on the cover or index sheet
☒ The drawing, page of specifications/calculations

have been prepared by other design professionals or consultants who are licensed and/or authorized to prepare such drawings in this state. It has been examined by me for:

1) design intent and appears to meet the appropriate requirements of Title 24, California Code of Regulations and the project specifications prepared by me, and

2) coordination with my plans and specifications and is acceptable for incorporation into the construction of this project.

This Statement of General Conformance "shall not be construed as relieving me of my rights, duties, and responsibilities under Sections 17302 and 81138 of the Education Code and Sections 4-336, 4-341 and 4-344" of Title 24, Part 1. (Title 24, Part 1, Section 4-317 (b))

I find that: ☒ All drawings or sheets listed on the cover or index sheet
☐ This drawing or page

☒ Is/are in general conformance with the project design intent, and

☒ has/have been coordinated with the project plans and specifications.

4/10/19
Signature Date
Architect or Engineer designated to be in general responsible charge

GARY PAIGE MOON
Print Name

C25409 7/31/2019
License Number Expiration Date

☐ Is/are in general conformance with the project design intent, and

☐ has/have been coordinated with the project plans and specifications.

Signature Date
Architect or Engineer delegated responsibility for this portion of the work

Print Name

License Number Expiration Date

GENERAL NOTES

1.0 General

1.1 Fire Stopping: Maintain integrity of fire rated walls by providing firestopping material at gaps and voids created by penetrations, structural members, and intersections with adjacent surfaces.

2.0 Site

3.0 Exterior Walls

3.1 Exterior stud walls shall be 6" x 16 ga metal studs at 16" o.c. per structural drawing, unless noted otherwise.

3.2 All exterior stud walls to be constructed on 3-1/2" high minimum raised concrete curbs, unless detailed otherwise.

3.3 The interior side of all exterior walls shall 5/8" gyp. bd., full-height to the underside of the floor and roof above. The room side shall receive finishes as scheduled.

4.0 Interior Partitions

4.1 Interior partitions shall be 4" x 18 ga. metal studs at 16" o.c. with full-height gypsum board both sides, unless noted otherwise.

4.2 All partitions surrounding and between restrooms shall be constructed on 6" minimum concrete curbs.

7.0 Roofing, Insulation, and Waterproofing

7.1 All exterior stud walls shall be insulated with R-19 batt insulation.

7.2 All roofs shall be insulated with R-30 rigid insulation, unless noted otherwise.

7.3 All interior stud partitions shall have 3-1/2" thick sound batt insulation, unless noted otherwise.

8.0 Doors

8.1 Access Doors- Provide metal access doors in partitions and hard ceilings at the location of all building elements which require access. Building elements specifically requiring access include all fire dampers, volume dampers, filters, valves, fusible links, mechanical and electrical junction boxes. Provide additional access doors where shown or scheduled.

PROJECT DESCRIPTION

THE PROJECT CONSISTS OF THE DEMOLITION OF AN EXISTING ONE STORY BUILDING AND THE CONSTRUCTION OF A NEW TWO STORY, STEEL FRAMED BUILDING, UTILITIES, STORM DRAIN, PARKING, LANDSCAPE, IRRIGATION AND OTHER SITE DEVELOPMENT.

GENERAL REQUIREMENTS

1. ALL WORK SHALL CONFORM TO TITLE 24, CALIFORNIA CODE OF REGULATIONS (CCR).
2. CHANGES TO THE APPROVED DRAWINGS AND SPECIFICATIONS SHALL BE MADE BY AN ADDENDA OR CHANGE ORDER APPROVED BY THE OFFICE OF THE STATE ARCHITECT, AS REQUIRED BY SECTIONS 4-338, PART 1, TITLE 24, CCR.
3. A PROJECT INSPECTOR EMPLOYED BY THE DISTRICT (OWNER) AND APPROVED BY THE DIVISION OF THE STATE ARCHITECT, SHALL PROVIDE CONTINUOUS INSPECTION OF THE WORK. THE DUTIES OF THE INSPECTOR ARE DEFINED IN SECTION 4-342, PART 1, TITLE 24, CCR. A CLASS 1 INSPECTOR (CONFORMING TO CLASSIFICATION CRITERIA AS PROVIDED IN INTERPRETATION OF REGULATIONS [IR] A-7 DATED SEPTEMBER 18, 2007) WHO IS SPECIALLY QUALIFIED IN MECHANICAL & ELECTRICAL WORK WILL BE REQUIRED FOR THIS PROJECT.
4. A DSA ACCEPTED TESTING LABORATORY DIRECTLY EMPLOYED BY THE SCHOOL BOARD SHALL CONDUCT ALL THE REQUIRED TESTS AND INSPECTIONS FOR THE PROJECT.
5. GRADING PLANS, DRAINAGE IMPROVEMENTS, ROAD AND ACCESS REQUIREMENTS AND ENVIRONMENTAL HEALTH CONSIDERATIONS SHALL COMPLY WITH ALL LOCAL ORDINANCES.

DEFERRED APPROVAL

THE FOLLOWING ITEMS SHALL NOT BE INSTALLED UNTIL SIGNED ENGINEERING CALCULATIONS, DETAILED PLANS, SPECIFICATIONS AND EQUIPMENT SUBMITTALS HAVE BEEN SUBMITTED, REVIEWED AND APPROVED BY THE ENGINEER, ARCHITECT, AND BY THE DIVISION OF STATE ARCHITECT:

1. ELEVATOR GUIDE RAILS AND BRACKETS

REFERENCE SYMBOLS

SECTION
4 / A3-3
NUMBER ABOVE - SECTION NUMBER
NUMBER BELOW - SHEET NUMBER

ELEVATION
4 / A3-3
NUMBER ABOVE - ELEVATION NUMBER
NUMBER BELOW - SHEET NUMBER

DETAIL
3 / 7.11
NUMBER ABOVE - DETAIL NUMBER
NUMBER BELOW - SHEET NUMBER

ROOM
1 SPACE NUMBER
4 — 103 / A3-2 — 2 INTERIOR ELEVATION NUMBER
3 SHEET NUMBER OF INTERIOR ELEVATION

INTERIOR ELEVATION
106 — 2 WALL VIEWED
SPACE NUMBER

ACCESSORY
13 — DENOTES TOILET ROOM ACCESSORIES

CASEWORK
HEIGHT
34 — 24 DEPTH
102 — CASEWORK MODEL
48 — WIDTH
L — LOCK

DOOR
001 — REFER TO DOOR SCHEDULE

WINDOW
10 — REFER TO WINDOW DETAILS

COLOR
LP-1 — REFER TO COLOR SCHEDULE SHEET 9.00

WALL TYPES

MASONRY WALL

METAL STUD PARTITION

WALL - 1 HR RATED

METAL STUD PART. WALL - 2 HR RATED

WHEELCHAIR

30" x 48" CLR. FLOOR SPACE
34" MAX. A.F.F. COUNTERTOP
30"W X 27"H X 19"D CLR. KNEE SPACE
MIN.

MATERIAL SYMBOLS

EARTH
STEEL
BATT INSULATION
SAND
WOOD BLOCKING
RIGID INSULATION
CONCRETE
WOOD BLOCKING
LATH AND PLASTER
GROUT
PLYWOOD
GYPSUM BOARD
MASONRY
FINISH WOOD
ACOUSTICAL CEILING BOARD

IDENTIFICATION STAMP
DIV. OF THE STATE ARCHITECT
APP. 03-119458 INC:
REVIEWED FOR
SS ☑ FLS ☑ ACS ☑
DATE:05/23/2019

DIVISION OF THE STATE ARCHITECT
355 South Grand Avenue, Suite 2100
Los Angeles, CA 90012
ph: (213) 897-3995 fx:(213) 897-3159

agency

tBP
architecture
planning
interiors

LICENSED ARCHITECT GARY PAIGE MOON No. C25409 RENEWAL 7-31-19 STATE OF CALIFORNIA

tBP/Architecture
4611 Teller Avenue
Newport Beach, CA 92660
ph: 949.673.0300 fx: 949.732.3895

architect

consultant

COMPTON COLLEGE
INSTRUCTIONAL BUILDING No.2
COMPTON COMMUNITY COLLEGE DISTRICT
1111 E. ARTESIA BLVD. COMPTON, CA.

owner

tBP project number: 20998.00
file name:
drawn by: checked by:
date: 04/08/2019

rev:	date:	description:

THIS DRAWING AND THE DESIGNS, IDEAS AND DETAILS OF INFORMATION CONTAINED HEREIN, CONSTITUTE UNPUBLISHED WORK OF tBP/ARCHITECTURE AND SHALL REMAIN PROPERTY OF tBP/ARCHITECTURE IN PERPETUITY. NO PART THEREOF SHALL BE REPRODUCED, DISCLOSED, DISTRIBUTED, SOLD, PUBLISHED OR OTHERWISE USED IN ANY WAY WITHOUT THE ADVANCE EXPRESS WRITTEN CONSENT OF tBP/ARCHITECTURE.

drawing title:
SHEET INDEX AND GENERAL INFO.

drawing no.:
T-2
drawing of

4/10/2019 11:17:07 AM

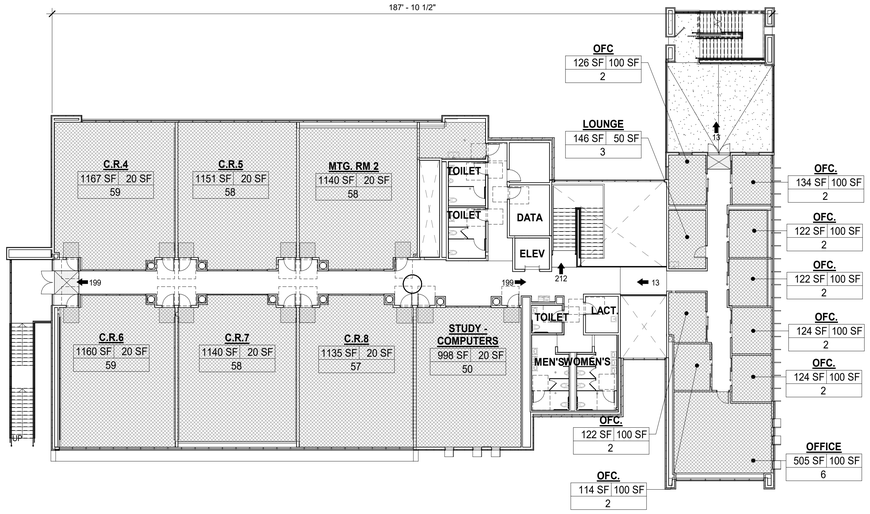

2ND FLOOR EXIT PLAN 2

SCALE1/16" = 1'-0"

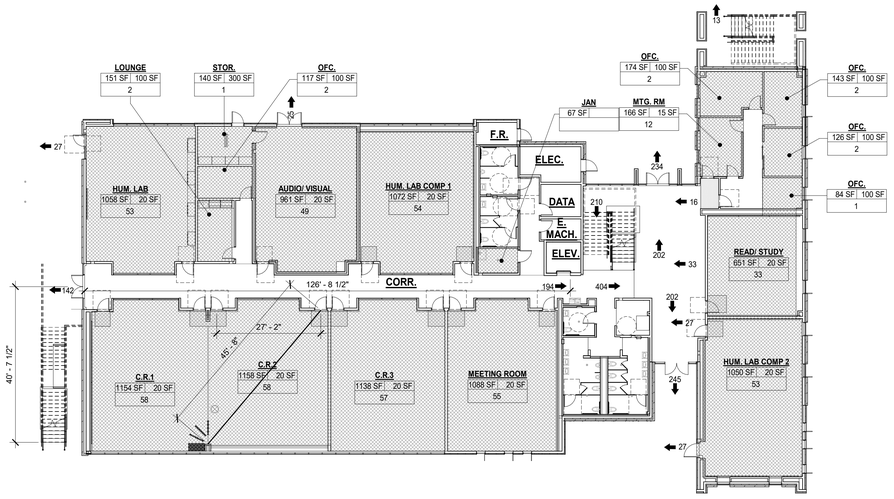

1ST FLOOR EXIT PLAN 1

SCALE1/16" = 1'-0"

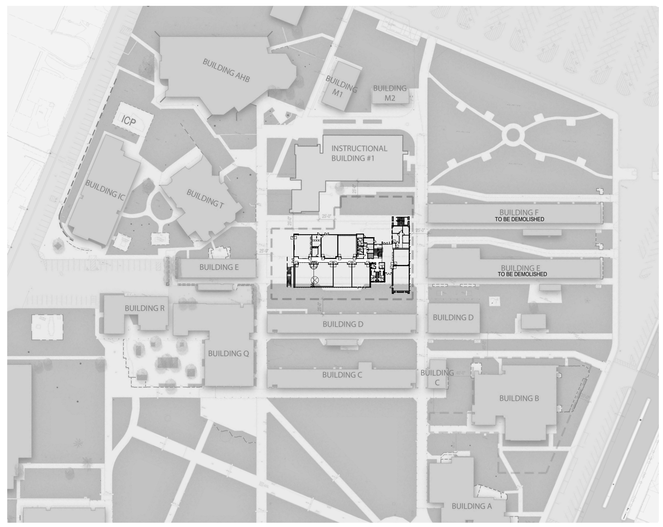

SITE PLAN CODE ANALYSIS 3

SCALE 1" = 100'-0"

APPLICABLE CODES

APPLICABLE CODES AS OF JANUARY 1, 2017:

2016 BUILDING STANDARDS ADMINISTRATIVE CODE, PART 1, TITLE 24 C.C.R.

2016 CALIFORNIA BUILDING CODE (C.B.C.), PART 2, TITLE 24 C.C.R.
(2015 INTERNATIONAL BUILDING CODE VOL 1-2 AND 2013 CALIFORNIA AMENDMENTS)

2016 CALIFORNIA ELECTRICAL CODE (C.E.C.), PART 3, TITLE 24 C.C.R.
(2015 NATIONAL ELECTRICAL CODE AND 2013 CALIFORNIA AMENDMENTS)

2016 CALIFORNIA MECHANICAL CODE (C.M.C.), PART 4, TITLE 24 C.C.R.
(2015 UNIFORM MECHANICAL CODE AND 2013 CALIFORNIA AMENDMENTS)

2013 CALIFORNIA PLUMBING CODE (C.P.C.), PART 5, TITLE 24 C.C.R.
(2015 UNIFORM PLUMBING CODE AND 2013 CALIFORNIA AMENDMENTS)

2016 CALIFORNIA ENERGY CODE (C.E.C.), PART 6, TITLE 24 C.C.R.

2016 CALIFORNIA FIRE CODE (C.F.C.), PART 9, TITLE 24 C.C.R.
(2015 INTERNATIONAL FIRE CODE AND 2013 CALIFORNIA AMENDMENTS)

2016 CALIFORNIA GREEN BUILDING STANDARDS CODE (CALGREEN), PART 11, TITLE 24 C.C.R.

2016 CALIFORNIA REFERENCED STANDARDS, PART 12, TITLE 24 C.C.R.

2007 ASME A17.1-(w/ A17.1a/CSA B44a-08 ADDENDA) SAFETY CODE FOR ELEVATORS AND ESCALATORS)

TITLE 19 C.C.R., PUBLIC SAFETY, STATE FIRE MARSHAL REGULATIONS

PARTIAL LIST OF APPLICABLE STANDARDS

NFPA 13	AUTOMATIC SPRINKLER SYSTEMS (california Amended)	2016 Edition
NFPA 14	STANDPIPE SYSTEMS (California Amended)	2013 Edition
NFPA 17	DRY CHEMICAL EXTINGUISHING SYSTEMS	2013 Edition
NFPA 17A	WET CHEMICAL SYSTEMS	2013 Edition
NFPA 20	STATIONARY PUMPS	2016 Edition
NFPA 22 NFPA 24	WATER TANKS FOR PRIVATE FIRE PROTECTION PRIVATE FIRE MAINS (California Amended)	2016 Edition
NFPA 72	NATIONAL FIRE ALARM CODE (California Amended)	2016 Edition
NFPA 80	FIRE DOORS AND OTHER OPENING PROTECTIVES	2016 Edition
NFPA 92 NFPA 253	STANDARD FOR SMOKE CONTROL SYSTEMS CRITICAL RADIANT FLUX OF FLOOR COVERING SYSTEMS	2015 Edition

REFERENCE CODE SECTION FOR NFPA STANDARDS- 2016 CBC (SFM) CHAPTER 35,
SEE CHAPTER 35 FOR STATE OF CALIFORNIA AMENDMENTS TO NFPA STANDARDS.

CODE ANALYSIS

OCCUPANCY GROUPS: A-3

CONSTRUCTION TYPE: TYPE II-B, SPRINKLERED

ALLOWABLE HEIGHT PER TABLE 504.3	ACTUAL	ALLOWABLE
NUMBER OF STORIES	2	2
BUILDING HEIGHT	40'-0"	55'-0"

ALLOWABLE BUILDING AREA FIRST FLOOR	GROUP A-3		
BASIC ALLOWABLE AREA A(t) PER TABLE 506.2		9,500 S.F.	
FRONTAGE INCREASE I(f)=(749/749 - .25)30/30 = .75			
SPRINKLER INCREASE I(s)=2.00		19,000 S.F.	
ALLOWABLE AREA PER STORY A(a)		28,500 S.F.	TOTALS
ACTUAL AREA	16,000 S.F.		16,000 S.F.
RATIO CALCULATION	.56		.56 < 1 O.K.

SECOND FLOOR	GROUP A-3		
BASIC ALLOWABLE AREA A(t) PER TABLE 503		9,500 S.F.	
FRONTAGE INCREASE I(f)=(749/749 - .25)30/30 = .75			
SPRINKLER INCREASE I(s)=2.00		28,000 S.F.	
ALLOWABLE AREA PER STORY A(a)		37,500 S.F.	TOTALS
ACTUAL AREAS	14,200 S.F.		14,200 S.F.
TOTAL BUILDING AREA			30,200 S.F.

TOTAL ALLOWABLE AREA = 57,000 S.F.

OCCUPANCY SEPARATIONS PER TABLE 508.3.3	
NON SEPARATED OCCUPANCIES APPLIED A-3 IS MORE RESTRICTIVE THAN B	NO REQUIREMENT

FIRE RESISTANCE RATING REQUIREMENTS FOR TYPE II-B CONSTRUCTION (TABLE 601)	
STRUCTURAL FRAME	0 HR.
EXTERIOR NON-BEARING WALLS	TABLE 602
INTERIOR NON-BEARING PARTITIONS	0 HR.
FLOOR CONSTRUCTION	0 HR.
ROOF CONSTRUCTION (CLASS B APPLY)	0 HR.

FIRE RESISTANCE OF EXTERIOR WALLS BASED ON FIRE SEPARATION DISTANCE (TABLE 602)	
FIRE SEPARATION DISTANCE > 30'	0 HR.

MAXIMUM AREA OF EXTERIOR WALL OPENINGS BASED ON FIRE SEPARATION DISTANCE (TABLE 704.8)	
FIRE SEPARATION DISTANCE > 20'	NO LIMIT

CORRIDOR FIRE-RESISTANCE RATING TABLE 1018.1		
OCCUPANCY	OCCUPANT LOAD SERVED BY CORRIDOR	REQUIRED FIRE-RESISTANCE RATING WITH SPRINKLER SYSTEM
A-3	GREATER THAN 30	0 HOURS

IDENTIFICATION STAMP
DIV. OF THE STATE ARCHITECT
APP. 03-119458 INC:
REVIEWED FOR
SS ☑ FLS ☑ ACS ☑
DATE:05/23/2019

DIVISION OF THE STATE ARCHITECT
355 South Grand Avenue, Suite 2100
Los Angeles, CA 90012
ph: (213) 897-3995 fx:(213) 897-3159

agency

tBP architecture planning interiors

LICENSED ARCHITECT JAMES PAIGE MOSS No. C25409 STATE OF CALIFORNIA

tBP/Architecture
4611 Teller Avenue
Newport Beach, CA 92660
ph: 949.673.0300 fx. 949.732.3895

architect

consultant

COMPTON COLLEGE
INSTRUCTIONAL BUILDING No.2
COMPTON COMMUNITY COLLEGE DISTRICT
1111 E. ARTESIA BLVD. COMPTON, CA.

owner

tBP project number: 20998.00
file name:
drawn by: checked by:
date: 04/08/2019

rev:	date:	description:

THIS DRAWING AND THE DESIGNS, DEPICTIONS, IDEAS AND OTHER INFORMATION CONTAINED HEREIN CONSTITUTE UNPUBLISHED WORK OF tBP/ARCHITECTURE AND SHALL REMAIN PROPERTY OF tBP/ARCHITECTURE IN PERPETUITY. NO PART THEREOF SHALL BE REPRODUCED, DISCLOSED, DISTRIBUTED, SOLD, PUBLISHED OR OTHERWISE USED IN ANY WAY WITHOUT THE ADVANCED EXPRESS WRITTEN CONSENT OF tBP/ARCHITECTURE.

drawing title:
CODE ANALYSIS

drawing no.:
T-3
drawing of

4/8/2019 2:16:04 PM

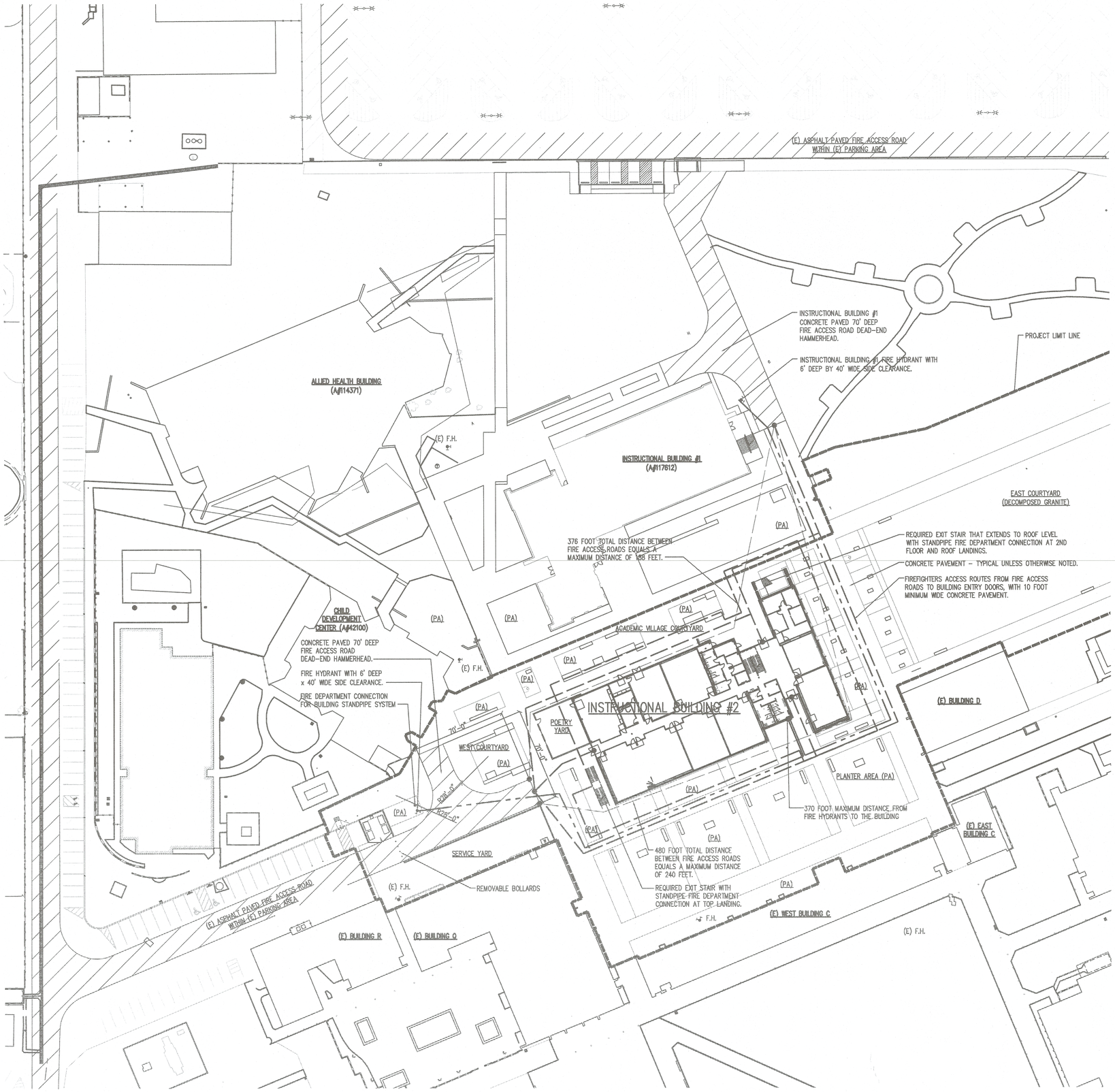

FIRE ACCESS SITE PLAN

SCALE: 1"=30'

FIRE ACCESS AND HYDRANTS

EXISTING AND NEW 20 FOOT WIDE FIRE DEPARTMENT VEHICULAR ACCESS ROADS WITH 13'-6" MINIMUM UNOBSTRUCTED VERTICAL CLEARANCE PER CFC SECTION 503.2.1.

EXISTING OR NEW FIRE WATER HYDRANTS

CODE AND BUILDING DESCRIPTION

LOCAL FIRE AUTHORITY:	CITY OF COMPTON FIRE DEPARTMENT
GOVERNING AUTHORITY:	CALIFORNIA DIVISION OF THE STATE ARCHITECT
GOVERNING CODE:	2016 CALIFORNIA FIRE CODE INCLUDING APPENDIXES BB, CC, AND D.
BUILDING INFORMATION	
AREA:	30, 200 SF
CONSTRUCTION TYPE:	II-B
HEIGHT:	2-STORY AT 35'-0" HIGH
FIRE PROTECTION:	FIRE SPRINKLER SYSTEM PER NFPA 13 AND 2016 CBC. FIRE STANDPIPE SYSTEM PER NFPA 14 AND 2016 CBC.
FIRE ALARM:	FIRE ALARM SYSTEM PER NFPA 72 AND 2016 CBC & CEC.
USE:	CLASSROOMS, MEETING ROOMS, AND OFFICES (GROUP A & B OCCUPANCIES)

FIRE FLOW ANALYSIS

MINIMUM REQUIRED FIRE FLOW AND DURATION FOR SCHOOL BUILDINGS – CFC TABLE BB 105.1

CONSTRUCTION TYPE	FIRE AREA	FIRE FLOW	REQUIRED FIRE FLOW AFTER 75% REDUCTION FOR BUILDING BEING SPRINKLERED	FLOW DURATION
II-B	30,200 SF	3,750 GPM	1,500 GPM	3 HOURS

NUMBER AND DISTRIBUTION OF FIRE HYDRANTS FOR SCHOOL BUILDINGS – CFC TABLE CC 105.1

FIRE FLOW REQUIREMENT	MINIMUM NUMBER OF REQUIRED FIRE HYDRANTS	MAXIMUM DISTANCE FROM ANY POINT ON FIRE ACCESS ROAD TO REQUIRED FIRE HYDRANT		
		REQUIRED MAXIMUM DISTANCE	50 FOOT REDUCTION FOR DEAD-END FIRE ACCESS ROAD	MAXIMUM DISTANCE PROVIDED
1,500 GPM	1	250 FEET	200 FEET	LESS THAN 10 FEET

NOTE: AN AVAILABLE FIRE FLOW OF 1,654 GPM @20 PSI WAS RECORDED IN THE MAY 9, 2018 FLOW TEST CONDUCTED BY THE CITY OF COMPTON WATER UTILITY DIVISION.

FIRE ACCESS ROADS ANALYSIS

LOCATION OF FIRE ACCESS ROADS – CFC SECTION 503.1.1

MAXIMUM DISTANCE FROM A FIRE ACCESS ROAD TO ALL PORTIONS OF THE PROPOSED BUILDING	
PER SECTION 503.1.1	INCREASE IN DISTANCE AS ALLOWED PER CFC 503.1.1, EXCEPTION 1 FOR SPRINKLERED BUILDING
150 FEET	240 FEET AS INDICATED ON SITE PLAN

LOCATION OF FIRE HYDRANTS – CFC SECTION 507.5.1

MAXIMUM DISTANCE FROM FIRE HYDRANTS ON FIRE ACCESS ROADS TO ALL PORTIONS OF THE PROPOSED BUILDING	
PER SECTION 507.5.1	MAXIMUM DISTANCE AS INDICATED ON SITE PLAN
400 FEET	370 FEET

FIRE ACCESS ROADS SHALL COMPLY WITH CFC CHAPTER 5 AND APPENDIX D AS FOLLOWS:

- 20 FOOT WIDTH PER SECTION 503.2.1.
- 6 FOOT DEEP x 40 FOOT LONG CLEARANCE AT FIRE HYDRANTS PER FIGURE D103.1.
- DEAD-END HAMMERHEAD WITH 20 FOOT WIDE ROAD PER TABLE D103-4 AND FIGURE D103.1.

FIRE ACCESS NOTES

1. THE FIRE DEPARTMENT ACCESS SIGNAGE SHALL BE INSTALLED PRIOR TO COMMENCING THE NEW CONSTRUCTION WORK TO FACILITATE FIRE DEPARTMENT ACCESS DURING CONSTRUCTION. THIS SIGNAGE SHALL ALSO REMAIN IN PLACE UPON COMPLETION OF CONSTRUCTION AND SHALL BE UPDATED AS NEEDED TO FACILITATE FIRE DEPARTMENT ACCESS.
2. FIRE APPARATUS ACCESS ROADS AND WATER SUPPLY FOR FIRE PROTECTION SHALL BE INSTALLED AND MADE SERVICEABLE PRIOR TO AND DURING THE TIME OF CONSTRUCTION EXCEPT WHEN APPROVED ALTERNATIVE METHODS OF PROTECTION ARE PROVIDED. (SEE CFC SECTION 501.4)
3. FIRE DEPARTMENT VEHICULAR ACCESS ROADS MUST BE INSTALLED AND MAINTAINED IN A SERVICEABLE MANNER PRIOR TO AND DURING THE TIME OF CONSTRUCTION. (CFC SECTION 501.4)
4. FIRE DEPARTMENT VEHICULAR ACCESS ROADS SHALL BE HARDSURFACES AND MAINTAINED TO PROVIDE ACCESS BY FIRE APPARATUS AT ALL TIMES. (CFC SECTION 503.2.3)

DSA 810

LOCAL FIRE AUTHORITY REVIEW

To facilitate the Division of the State Architect's (DSA) approval of the Fire/Life Safety portion of a project, DSA requires Local Fire Authority (LFA) review of certain elements as identified in this form. Use of this form is mandatory for projects that add square footage to a campus or if any item on this form is relevant to the project. For additional information, see DSA B10 Instructions and DSA Policy 09-01.

PROJECT INFORMATION

School District/Owner: Compton Community College District
Project Name/School: Compton College
Project Address: 1111 E. Artesia Blvd, California 90221

LOCAL FIRE AUTHORITY (LFA)

LFA Agency Name: Compton Fire Department
LFA Reviewer Name: Rondell Simpson Title: FIRE CHIEF
Email: Telephone Number: (310) 605-5611

I have reviewed and responded to the applicable items for this project as listed below.
Note: Only sign this form when it is imaged onto the set. A loose form is not acceptable to DSA.
LFA Reviewer's Signature: R D Simpson Date: 10/31/18
Review Key: "Y" = Complies with LFA requirements "N" = Not approved (complete Section 8)
"NA" = Not applicable to the project "NR" = LFA elects not to review

	Description	Y	N	NA	NR
1	Where an elevator does not meet medical emergency service cab size, per the California Building Code (CBC), use of stairways for emergency rescue and patient transport is accessible.				X
2	Access roads, fire lane markings, pavers and gate entrances are in accordance with Title 19, California Code of Regulations and the California Fire Code, Chapter 5.	X			
3	Fire hydrant location and distribution complies with the California Fire Code (or see # 4).	X			
4	Fire hydrant location and distribution complies with NFPA 1142, "Alternate Means." If "NR" is checked, DSA can only approve on-site water storage as an alternate. The signature of the school district official is required to acknowledge the use of alternate means.				X
	Signature of School District Official: _____ Date: _____ Print the School District Official's Name: _____				
5	The location(s) of the proposed post indicator valve and fire department connection meet the requirements of this jurisdiction.	X			
6	The location(s) of the detector check valve assembly meet the requirements of this jurisdiction.	X			
7	Is the project located in a hazard severity zone area? (CBC, Chapter 7A, Section 701A.) ☐ Yes ☒ No Check type if "Yes": ☐ Moderate ☐ High ☐ Very High ☐ WFA (If one of these boxes is checked, the project design must meet the requirements of Chapter 7A.)				
8	COMMENTS (note deficiencies):				

DSA 810 (rev 05-12-14) DEPARTMENT OF GENERAL SERVICES Page 1 of 1
DIVISION OF THE STATE ARCHITECT STATE OF CALIFORNIA

IDENTIFICATION STAMP
DIV. OF THE STATE ARCHITECT
APP. 03-119458 INC:
REVIEWED FOR
SS ☑ FLS ☑ ACS ☑
DATE: 05/23/2019

DIVISION OF THE STATE ARCHITECT
355 South Grand Avenue, Suite 2100
Los Angeles, CA 90012
ph: (213) 897-3995 fx:(213) 897-3159
agency

tBP architecture planning interiors
LICENSED ARCHITECT JOSEPH WILLIAM WOLF No. C25509 STATE OF CALIFORNIA
tBP/Architecture
4611 Teller Avenue
Newport Beach, CA 92660
ph: 949.673.0300 fx: 949.732.3695
architect

City of Compton
Fire Department
APPROVED
R D Simpson DATE: 10/31/18
FIRE PREVENTION BUREAU
(X) Subject to field inspection approval
( ) Subject to corrections on plans
( ) Subject to compliance/sheet requirement
( ) Conceptual approval only
agency

COMPTON COLLEGE INSTRUCTIONAL BUILDING No. 2

COMPTON COMMUNITY COLLEGE DISTRICT
1111 E. ARTESIA BLVD. COMPTON, CA.

owner

tBP project number : 20998.00
file name:
drawn by: checked by:
date: 09/14/18

Rev:	date:	description:

ALL DRAWINGS AND THE DESIGNS, IDEAS, AND CONCEPTS CONTAINED HEREIN COMPOSITE, ARRANGEMENT OF DRAWINGS, ARCHITECTURE AND SHALL REMAIN THE PROPERTY OF tBP ARCHITECTURE IN PERPETUITY. NO PARTS THEREOF SHALL BE REPRODUCED, DISCLOSED, DISTRIBUTED, SOLD, PUBLISHED OR COPIED BY USED IN ANY WAY WITHOUT THE ADVANCED EXPRESS WRITTEN CONSENT OF tBP ARCHITECTURE.

drawing title:
FIRE ACCESS SITE PLAN

drawing no.:
T-4
drawing of

SITE IMPROVEMENT PLANS
FOR
COMPTON COLLEGE
INSTRUCTIONAL BUILDING No. 2

GENERAL NOTES FOR GRADING

1. ALL WORK SHALL CONFORM WITH THE "GREENBOOK" STANDARD SPECIFICATIONS FOR PUBLIC WORKS CONSTRUCTION (SSPWC), 2015 EDITION AND THE LATEST REVISIONS THERETO, THE WORK AREA TRAFFIC CONTROL HANDBOOK (W.A.T.C.H. MANUAL), A.D.A, TITLE 24 REQUIREMENTS, AND THE 2016 C.B.C. UNLESS SPECIFIED OTHERWISE IN THE CONTRACT SPECIFICATIONS.
2. A COPY OF THE DIVISION OF STATE ARCHITECT APPROVED VERSION OF THESE PLANS MUST BE IN THE POSSESSION OF A RESPONSIBLE PERSON AND AVAILABLE AT THE JOB SITE AT ALL TIMES.
3. AT LEAST TWO (2) WORKING DAYS PRIOR TO COMMENCING CONSTRUCTION, THE CONTRACTOR SHALL CONTACT THE REGIONAL NOTIFICATION CENTER (UNDERGROUND SERVICE ALERT OF SOUTHERN CALIFORNIA – U.S.A. AT 811) TO OBTAIN AN INQUIRY IDENTIFICATION NUMBER AND TO REQUEST THE UTILITY OWNERS TO MARK OR OTHERWISE INDICATE THE LOCATION OF THEIR SUBSURFACE FACILITIES. THE CONTRACTOR SHALL DETERMINE THE LOCATION AND DEPTH OF ALL UTILITIES, INCLUDING ALL SERVICE CONNECTIONS, WHICH HAVE BEEN MARKED BY THE RESPECTIVE OWNERS AND WHICH MAY AFFECT OR BE AFFECTED BY ITS OPERATIONS. THE CONTRACTOR SHALL TAKE ALL NECESSARY MEASURES TO PROTECT ALL UTILITIES AND ALL STRUCTURES FOUND AT THE SITE.
4. THROUGHOUT ALL PHASES OF CONSTRUCTION, INCLUDING SUSPENSION OF WORK, UNTIL FINAL ACCEPTANCE OF THE PROJECT, THE CONTRACTOR SHALL KEEP THE WORK SITE CLEAN AND FREE FROM RUBBISH AND DEBRIS. THE CONTRACTOR SHALL ALSO ABATE DUST NUISANCE BY CLEANING, SWEEPING AND SPRINKLING WITH WATER AND USING DUST FENCES OR OTHER METHODS AS DIRECTED BY THE CONSTRUCTION MANAGER OR FIELD INSPECTOR THROUGHOUT THE CONSTRUCTION OPERATION.
5. KEEP A RECORD OF CHANGES THAT OCCUR DURING CONSTRUCTION AND SUBMIT THIS RECORD TO THE OWNER CERTIFIED AS "RECORD DRAWING" PLANS.
6. ALL DAMAGE CAUSED TO PUBLIC STREETS, INCLUDING HAUL ROUTES, ALLEYS, SIDEWALKS, CURBS OR STREET FURNISHINGS, OR TO PRIVATE PROPERTY SHALL BE REPAIRED AT THE SOLE EXPENSE OF THE CONTRACTOR TO THE PUBLIC WORKS INSPECTOR'S & THE PROJECT CIVIL ENGINEER'S SATISFACTION.
7. THE CONTRACTOR SHALL REMOVE AND REPLACE ANY BROKEN OR DAMAGED SIDEWALK, CURB, GUTTER OR ASPHALT PAVING CAUSED BY THEIR WORK AT THE DIRECTION OF THE OWNER AT NO ADDITIONAL COST TO THE OWNER.
8. TRIM TREE ROOTS AS NECESSARY TO CONSTRUCT PAVEMENT AND INSTALL HEADERS. TRIM ROOTS UNDER THE DIRECTION OF A CERTIFIED ARBORIST. THE DISTRICT OAR WILL NOTIFY THE DISTRICT GARDENING SUPERVISOR PRIOR TO TRIMMING ROOTS.
9. UPON MOBILIZATION THE CONTRACTOR SHALL POTHOLE AND EXPOSE THE EXISTING UTILITIES AT ALL CROSSINGS AND AT THE POINT OF TIE–IN; THEN CONTACT THE ENGINEER TO VERIFY THE ELEVATION OF THE EXISTING FACILITIES.
10. SURVEY MONUMENTS SHALL BE PRESERVED AND REFERENCED BEFORE CONSTRUCTION AND RE–PLACED AFTER CONSTRUCTION PURSUANT TO SECTION 2–9 OF THE STANDARD SPECIFICATIONS FOR PUBLIC WORKS CONSTRUCTION (SSPWC).
11. EITHER WATER OR DUST PALLIATIVE, OR BOTH, MUST BE APPLIED FOR THE ALLEVIATION OR PREVENTION OF EXCESSIVE DUST RESULTING FROM THE LOADING OR TRANSPORTATION OF EARTH FROM OR TO THE PROJECT SITE OR PRIVATE AND PUBLIC ROADWAYS.
12. CONSTRUCT STRAIGHT GRADES BETWEEN ELEVATIONS SHOWN ON PLAN UNLESS INTERRUPTED BY A GRADE CHANGE LINE. ANY DEVIATION FROM THE GRADING PLAN MUST HAVE PRIOR APPROVAL FROM THE ENGINEER.
13. ALL AREAS TO RECEIVE COMPACTED FILL SHALL BE INSPECTED AND APPROVED BY THE SOILS ENGINEER (AND ENGINEERING GEOLOGIST, WHERE EMPLOYED) AFTER REMOVAL OF UNSUITABLE MATERIAL AND EXCAVATION OF KEYWAYS AND BENCHES, AND PRIOR TO PLACEMENT OF SUBSURFACE DRAINAGE SYSTEMS OR ANY FILLS.
14. ALL SOILS OR ROCK MATERIALS DEEMED UNSUITABLE FOR PLACEMENT IN COMPACTED FILL SHALL BE REMOVED FROM THE SITE. ANY IMPORTED MATERIAL SHALL BE TESTED PER DISTRICT REQUIREMENTS AND APPROVED BY THE SCHOOL DISTRICT AND SOILS ENGINEER PRIOR TO USE IN COMPACTED FILL. BLOCKY MATERIAL SHALL BE BROKEN INTO SUITABLE PARTICLE SIZES, BEFORE BEING USED AS FILL IN CONFORMANCE THE PROJECT SOILS REPORT.
15. ALL TREE ROOTS, ABANDONED IRRIGATION LINES, UTILITY SERVICES, SEPTIC TANKS AND SIMILAR MATERIALS SHALL BE REMOVED FROM THE SITE AND VOIDS CREATED THEREBY SHALL BE PROPERLY FILLED AND COMPACTED AS DIRECTED BY THE GEOTECHNICAL ENGINEER WITHIN THE LIMITS OF ALL OVER–EXCAVATED AREAS.
16. ALL EXCAVATED BACK SLOPES AND KEYS FOR BUTTRESS FILLS MUST BE EXAMINED BY THE ENGINEERING GEOLOGIST AND SOILS ENGINEER TO INSURE ALL POTENTIAL PLANES OF FAILURE HAVE BEEN EXPOSED IN THE EXCAVATION AND WILL BE ADEQUATELY SUPPORTED BY THE PROPOSED BUTTRESS FILLS.
17. THE SOILS ENGINEER SHALL SUBMIT RECOMMENDATIONS FOR CORRECTIVE WORK TO INSURE SLOPE STABILITY WHERE UNSTABLE MATERIAL IS EXPOSED AT THE TOP OF CUTS. COORDINATE WITH ARCHITECT OF RECORD AND OWNERS REPRESENTATIVE.
18. THE CONTRACTOR SHALL BE RESPONSIBLE FOR PROVIDING STORM DAMAGE PREVENTION MEASURES OR EROSION CONTROL DEVICES AND/OR TO PERFORM CERTAIN GRADING TO PREVENT SOIL OR EXCESS RUNOFF FROM FLOWING INTO PUBLIC STREETS OR ADJACENT PROPERTIES. IN THE EVENT OF SUCH AN OCCURRENCE, CLEANUP SHALL COMMENCE IMMEDIATELY. SHOULD CITY FORCES OR THE CITY CONTRACTOR PERFORM ANY CLEANUP RESULTING FROM THIS DEVELOPMENT, THE CONTRACTOR SHALL PAY THE COST INCURRED WITHIN TEN (10) WORKING DAYS UPON RECEIPT OF BILLING.
19. THE CONTRACTOR OR HIS AGENT SHALL BE RESPONSIBLE FOR REMOVAL AND CLEANUP OF ANY SPILL ON PUBLIC STREETS DURING THE GRADING OPERATION. AS WELL AS REPAIR OF DAMAGE TO HAUL ROUTES AND EXISTING FACILITIES.
20. MAXIMUM SLOPES FOR BOTH CUT AND FILL SHALL BE 2:1.
21. NO OVERSIZE OR OVERWEIGHT LOADS ARE PERMITTED WITHOUT A SEPARATE MOVING PERMIT.
22. ALL EQUIPMENT USED TO HAUL EXCAVATION OR FILL MATERIAL FROM OR TO THE SITE SHALL FOLLOW A DESIGNATED ROUTE OR ROUTES IN GOING TO AND FROM THE SITE. THE CONTRACTOR SHALL BE ENTITLED TO THE DESIGNATION OF A ROUTE PROVIDING ACCESS TO A SPECIFIED PLACE OTHER THAN THE SITE, AFTER SHOWING TO THE SATISFACTION OF THE CITY BUILDING OFFICIAL THAT SUCH SPECIFIED PLACE IS A PLACE WHERE EXCAVATION MATERIAL MAY BE REASONABLY DEPOSITED OR FILL MATERIAL MAY BE OBTAINED. A SEPARATE ENCROACHMENT PERMIT IS REQUIRED WHEN IT IS NECESSARY TO FLAG TRAFFIC OR INSTALL ANY TRAFFIC CONTROL DEVICES NO CITY RIGHT–OF–WAY.
23. FINE GRADING TO BE NO LESS THAN THE FOLLOWING UNLESS STATED OTHERWISE ON THE PLANS:

	CROSS–SLOPE	LONGITUDINAL–SLOPE
PERVIOUS SURFACES	2.00%	1.00%
ASPHALT SURFACES	1.00%	1.00%
CONCRETE SURFACES	0.50%	0.50%

24. THE CONTRACTOR SHALL NOTIFY THE DSA INSPECTOR AND OWNERS REPRESENTATIVE AT LEAST 48 HOURS IN ADVANCE OF REQUIRED INSPECTIONS AT FOLLOWING STAGES OF THE WORK:

    (A) INITIAL: WHEN THE SITE HAS BEEN CLEARED OF VEGETATION AND UNAPPROVED FILL AND IT HAS BEEN SCARIFIED, BENCHED OR OTHERWISE PREPARED FOR FILL. NO FILL SHALL HAVE BEEN PLACED PRIOR TO THIS INSPECTION.

    (B) ROUGH: WHEN APPROXIMATE FINAL ELEVATIONS HAVE BEEN ESTABLISHED; DRAINAGE TERRACES, SWALES AND BERMS INSTALLED AT THE TOP OF THE SLOPES.

    (C) FINAL: WHEN GRADING HAS BEEN COMPLETED; ALL DRAINAGE DEVICES INSTALLED; SLOPE PLANTING ESTABLISHED, IRRIGATION SYSTEMS INSTALLED AND THE RECORD PLANS, REQUIRED STATEMENTS, AND REPORTS HAVE BEEN SUBMITTED.
25. ANY EARTH ROCK, GRAVEL, SAND, STONE OR OTHER EXCAVATED MATERIAL DEPOSITED OR CAUSED TO ROLL, FLOW OR WASH UPON ANY PUBLIC PLACE OR PRIVATE PROPERTY SHALL BE REMOVED FROM SUCH PUBLIC PLACE OR PRIVATE PROPERTY BY THE END OF THE WORKDAY BY THE CONTRACTOR RESPONSIBLE FOR THE DEPOSITION. IF AN ADVERSE CONDITION IS CAUSED BY DEPOSIT, THE CONDITION SHALL BE CORRECTED IMMEDIATELY.
26. EVERY EFFORT SHOULD BE MADE TO ELIMINATE THE DISCHARGE OF NON–STORMWATER FROM THE PROJECT SITE AT ALL TIMES.
27. ALL TRUCKS HAULING DIRT, SAND, OIL, OR OTHER LOOSE MATERIALS ON A HIGHWAY ARE TO BE COVERED OR SHOULD MAINTAIN AT LEAST TWO FEET OF FREEBOARD IN ACCORDANCE WITH THE REQUIREMENTS OF CALIFORNIA VEHICLE CODE SECTION 23114. (FREEBOARD MEANS VERTICAL SPACE BETWEEN THE TOP OF THE LOAD AND TOP OF THE TRAILER).
28. RAISE UTILITY BOXES TO ULTIMATE FINISH SURFACE IN SCOPE OF WORK AREAS.
29. CONTRACTOR SHALL HIRE A LICENSED SURVEYOR TO STAKE ALL CATCH BASINS, STORM DRAIN PIPE, SAW–CUT LINES, BUILDING PADS, FINISH FLOORS, SWALES AND GRADE BREAKS. TWO STAKES SHALL BE PROVIDED FOR ALL CATCH BASINS.
30. IN ORDER TO MITIGATE THE IMPACTS ON CULTURAL RESOURCES OR LANDSCAPING, IF CULTURAL MATERIAL SUGGESTIVE OF PREHISTORIC OR HISTORIC ORIGIN IS ENCOUNTERED, WORK IN THE VICINITY OF THE FIND SHALL BE STOPPED, AND THE OWNER SHALL BE NOTIFIED. GRADING, CONSTRUCTION OR LANDSCAPING SHALL NOT RESUME UNTIL THE FIND IS EVAULATED AND IT IS DETERMINED WHETHER THE MATERIAL IS ARCHAEOLOGICALLY SIGNIFICANT AND ADDITIONAL MITIGATION IS REQUIRED.
31. NO PERSON SHALL, WHEN HAULING ANY EARTH, SAND, GRAVEL, ROCK, STONE OR OTHER EXCAVATED MATERIAL OR DEBRIS OVER ANY PUBLIC STREET, ALLEY OR OTHER PUBLIC PLACE, ALLOW SUCH MATERIAL TO BLOW OR SPILL OVER UPON SUCH STREET, ALLEY OR PUBLIC PLACE OR ADJACENT PRIVATE PROPERTY OR ANY WATER BODIES, CREEKS OR STREAMS. THE CONTRACTOR SHALL BE RESPONSIBLE FOR THE CLEANUP AND REMOVAL OF ANY CONSTRUCTION OR SOILS MATERIALS DEPOSITED ON THE PUBLIC RIGHT–OF–WAY, PUBLIC WATERS OR ADJACENT PRIVATE PROPERTY.

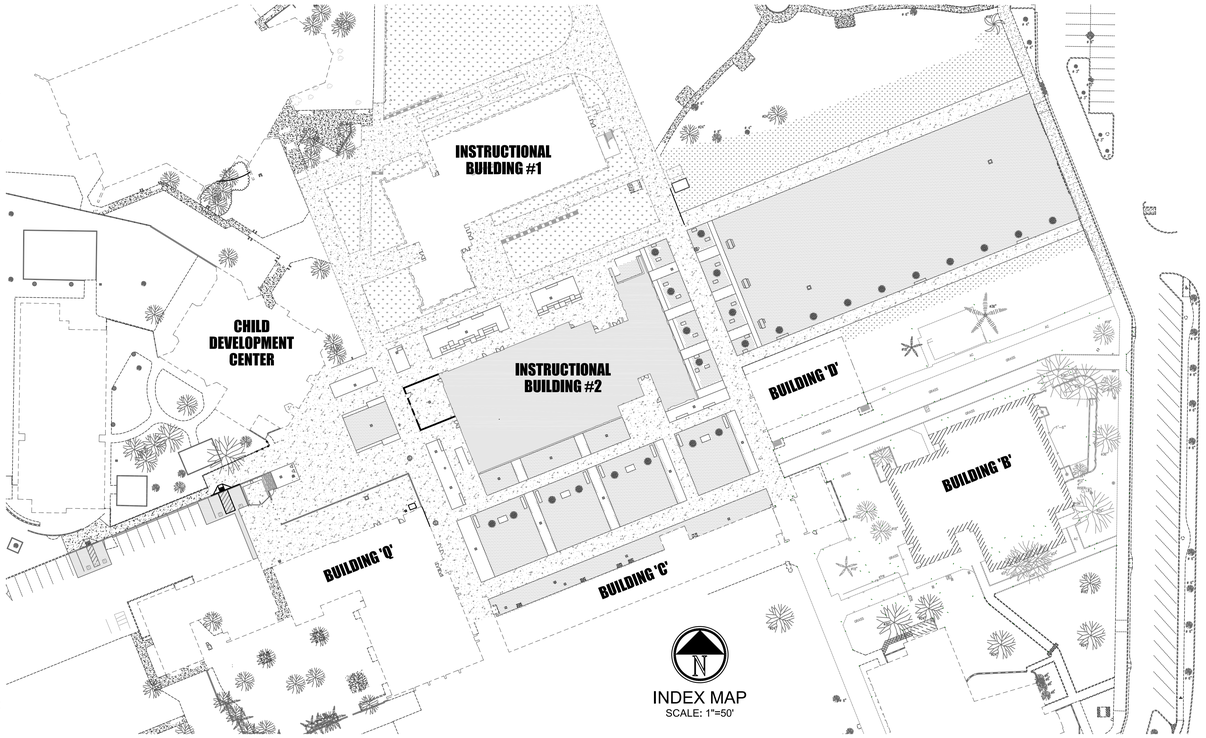

INDEX MAP
SCALE: 1"=50'

LEGEND

- POWER POLE
- SEWER MANHOLE
- STORM DRAIN MANHOLE
- TELEPHONE MANHOLE
- FIRE HYDRANT
- SEWER CLEANOUT
- WATER VALVE
- GAS VALVE
- WATER METER
- GAS METER
- WATER VAULT
- GAS VAULT
- TELEPHONE VAULT
- ELECTRIC VAULT
- WELL
- ELECTRIC PULLBOX
- GUY WIRE
- LIGHT
- (62.00) EXISTING ELEVATION
- 62.00 PROPOSED ELEVATION
- 62 = EXISTING CONTOURS
- 62 = PROPOSED CONTOUR
- SIGN POST
- WIRE FENCE
- CHAIN LINK FENCE
- BLOCK WALL
- TREE
- FLOW DIRECTION
- FS FINISHED SURFACE
- FF FINISHED FLOOR
- FL FLOW LINE
- CF CURB FACE
- GB GRADE BREAK
- HP HIGH POINT
- INV INVERT
- = NEW DECOMPOSED GRANITE
- = NEW CONCRETE
- = NEW IB2 BUILDING OUTLINE
- = (E)BUILDING (TO REMAIN)
- SD — SD — STORM DRAIN
- W — W — DOMESTIC WATER
- FW — FW — FIRE WATER
- SS — SS — SANITARY SEWER
- G — G — GAS
- E — E — ELECTRICAL/POWER
- C — C — COMMUNICATIONS
- CHW — CHW — CHILLED/HOT WATER

1'–6" DEPTH FROM SURFACE

DEPTH OF (E)UTILITY ARE APPROXIMATE AND PROVIDED FROM THE UNDERGROUND UTILITY MAPPING SURVEY. ESTIMATED DEPTHS ARE FROM THE GROUND SURFACE TO THE CENTER OF THE FACILITY, INVERT OF WASTE LINES, OR TO THE FACILITY TRACER WIRE. DEPTH ESTIMATES SHOULD BE USED WITH CAUTION AND MAY VARY ALONG THE LENGTH OF THE FACILITY.

ABBREVIATIONS

ABND	ABANDONED	L T & T	LEAD TACK AND TAG
AC	ASPHALT PAVEMENT	MH	MANHOLE
AP	ANGLE POINT	NG	NATURAL GROUND
BLDG	BUILDING	N.I.C.	NOT IN CONTRACT
BC	BEGINNING OF CURVE	P.C.C.	PORTLAND CEMENT CONRETE
BW	BACK OF WALK	PL	PROPERTY LINE
CL	CENTERLINE	PIV	POST INDICATOR VALVE
CF	CURB FACE HEIGHT	PP	POWER POLE
CLF	CHAIN LINK FENCE	RCE	REGISTERED CIVIL ENGINEER
CONC	CONCRETE	RR	RAILROAD
DCV	DETECTOR CHECK VALVE	S	SLOPE
DESC	DESCRIBED	SDMH	STORM DRAIN MANHOLE
D/W	DRIVEWAY	SL	STREET LIGHT
DI	DROP INLET	SMH	SEWER MANHOLE
DS	DOWN SPOUT	S.P.P.W.C.	STANDARD PLANS FOR PUBLIC WORKS CONSTRUCTION (LATEST EDITION).
EP	EDGE OF PAVEMENT	S.S.P.W.C.	STANDARD SPECIFICATIONS FOR PUBLIC WORKS CONSTRUCTION (GREEN BOOK), 2015 EDITION
EC	END OF CURVE		
EX	EXISTING		
FDC	FIRE DEPARTMENT CONNECTION	SW	SIDEWALK
FH	FIRE HYDRANT	TC	TOP OF CURB
FL	FLOWLINE	TELE	TELEPHONE
FS	FINISH SURFACE	TG	TOP OF GRATE
GA	GUY ANCHOR	TCO	TOP OF CLEANOUT
GB	GRADE BREAK	TS	TRAFFIC SIGN
GP	GUARD POST	TW	TOP OF WALL
GV	GAS VALVE	TYP.	TYPICAL
HB	HOSE BIBB	UDC	UNDERGROUND CONDUIT
HP	HIGH POINT	UTIL	UTILITY
ICV	IRRIGTION CONTROL VALVE	WM	WATER METER
INV	INVERT	WV	WATER VALVE
IP	IRON PIPE	W VLT	WATER VAULT
L	LENGTH	VIF	VERIFY IN FIELD
LIP	LIP OF GUTTER	VLT	VAULT
LP	LIGHT POLE		

FLOOD ZONE INFORMATION

Per Flood Insurance Rate Map Number 06037C1815F, dated September 26, 2008, the flood zone for this area is ZONE X (SHADED). ZONE X (SHADED) is an area of 0.2% (500–year) annual chance flood; areas of 1% (100–year) annual chance flood with average depths of less than 1 foot or with drainage areas less than 1 square mile and areas protected by levees from a 1% (100–year) annual chance flood.

SHEET INDEX

SHEET	DESIGNATION
C1.0	SITE IMPROVEMENT PLAN TITLE SHEET
C1.1	DEMOLITION PLAN
C1.2	GRADING PLAN
C1.3	GRADING DETAILS
C1.4	GRADING DETAILS
C1.5	UTILITY PLAN
C1.6	UTILITY DETAILS
C1.7	UTILITY DETAILS

NPDES STORM WATER CONSTRUCTION GENERAL PERMIT 2009-0009-DWQ (AS AMENDED BY 2010-0014-DWQ & 2012-006-DWQ):
BEFORE CONSTRUCTION ACTIVITY CAN COMMENCE A STORM WATER POLLUTION PREVENTION PLAN (SWPPP) MUST BE IN PLACE AT THE CONSTRUCTION SITE AND A WASTE DISCHARGE IDENTIFICATION NUMBER (WDID #) OBTAINED FROM THE STATE WATER BOARD. THE CONTRACTOR IS RESPONSIBLE FOR THE PREPARATION OF THE SWPPP & OBTAINING THE WDID #. THE CONTRACTOR IS RESPONSIBLE FOR THE IMPLEMENTATION OF THE SWPPP BY UTILIZING A QUALIFIED SWPPP PRACTITIONER (QSP) AS DEFINED IN THE CONSTRUCTION GENERAL PERMIT. THIS INCLUDES MAINTENANCE OF EROSION AND SEDIMENT CONTROL DURING THE LIFE OF THE PROJECT AND SUBMITTAL OF THE ANNUAL REPORTS. THE GENERAL CONTRACTOR SHALL COORDINATE WITH THE OWNER TO PROVIDE ALL APPLICABLE INFORMATION REQUESTED BY THE OWNER TO COMPLETE THE SWPPP.

HORIZONTAL CONTROL

AN AUTOCAD GEOMETRIC ELECTRONIC FILE SHALL BE MADE AVAILABLE TO THE CONTRACTOR UPON REQUEST FOR THE CONTRACTOR'S SURVEYOR TO LAYOUT THE CONSTRUCTION STAKING OF THE PROJECT. THE SURVEYOR OR CONTRACTOR WILL NEED TO SIGN A WAIVER FORM BEFORE RELEASE OF ANY CAD ELECTRONIC DRAWINGS.

BENCH MARK INFORMATION:

ADD 0.08 FEET TO ELEVATION SHOWN HEREON TO EQUAL THE LOS ANGELES COUNTY DEPARTMENT OF PUBLIC WORKS 2005 ADJUSTMENT OF THE NORTH AMERICAN DATUM OF 1988 (NAVD88) PER THE FOLLOWING LOS ANGELES COUNTY BENCHMARKS:

GARDENA QUAD, 2005 ADJUSTMENT:

LA COUNTY DPW BM Y12223 2005 ADJ. ELEV. = 63.473' NAVD88 PER COUNTY ELEV.=63.39 PER THIS SURVEY (HENNON & AERIAL MAP) L&DPW TAG IN EAST CURB 1FT. NORTH OF BEGINNING OF CURB RETURN AT NORTHEAST CORNER OF ALAMEDA STREET (EAST BARREL) AND GREENLEAF BLVD. LA COUNTY DPW BM Y12222 2005 ADJ. ELEV.=63.496' NAVD88 PER COUNTY ELEV.=63.42' PER THIS SURVEY (HENNON & AERIAL MAP) L&DPW TAG IN EAST CURB 1 FT. SOUTH OF BEGINNING OF CURB RETURN AT SOUTHEAST CORNER ALAMEDA STREET (EAST BARREL) & GREENLEAF BLVD.

ANY USER OF ELEVATION AND/OR COORDINATES SHOWN HEREON FOR THE CONTROL OF CONSTRUCTION, SHALL VERIFY AT LEAST 3 POINTS SHOWN HEREON, FOR MATHEMATICAL CONSISTENCY PRIOR TO SUCH USE.

EXISTING UNDERGROUND STRUCTURES

THE LOCATIONS OF THE EXISTING UNDERGROUND UTILITIES, AS SHOWN ON THESE PLANS, WERE OBTAINED FROM SOURCES OF VARYING RELIABILITY. NO REPRESENTATION IS MADE AS TO THE ACCURACY OR COMPLETENESS OF SAID UTILITY INFORMATION. THE CONTRACTOR IS CAUTIONED THAT ONLY ACTUAL EXCAVATION WILL REVEAL THE LOCATIONS OF SUCH UNDERGROUND UTILITIES. CONTRACTOR SHALL VERIFY LOCATIONS OF EXISTING UTILITIES PRIOR TO ANY EXCAVATION OR IMPROVEMENT. THE CONTRACTOR SHALL TAKE PRECAUTIONARY MEASURES TO PROTECT THE UTILITY LINES SHOWN TO BE PROTECTED HEREON AND ANY OTHER LINES NOT OF RECORD OR NOT SHOWN HEREON.

EARTHWORK NOTICE TO CONTRACTOR: NO EARTHWORK ANALYSIS HAS BEEN COMPLETED WITH RESPECT TO VOLUMES OF SOILS TO BE EXCAVATED, PLACED, OR IMPORTED IN ORDER TO PROVIDE THE FINISHED GRADES SHOWN ON THE PLANS. THE CONTRACTOR IS SOLELY RESPONSIBLE FOR VERIFYING THE EARTHWORK QUANTITIES NECESSARY TO COMPLETE THE PROJECT.

GENERAL NOTES TO CONTRACTOR

1. THE CONTRACTOR'S ATTENTION IS DIRECTED TO SECTION 7–10, PUBLIC CONVENIENCE AND SAFETY, OF THE STANDARD SPECIFICATIONS FOR PUBLIC WORKS CONSTRUCTION (GREENBOOK), IN REGARDS TO SAFETY ORDERS.
2. SCOPE OF WORK:

   A. FURNISH ALL LABOR, SUPERVISION, MATERIALS, EQUIPMENT & FACILITIES NECESSARY TO FURNISH, FABRICATE, DELIVER, STORE AND INSTALL ALL WORK NOTED ON THE DRAWINGS.

   B. THE CONTRACTOR SHALL FURNISH & INSTALL ALL WORK NECESSARY TO MAKE A COMPLETE SYSTEM WHETHER OR NOT SUCH DETAILS ARE MENTIONED IN THESE SPECIFICATIONS OR SHOWN ON THE PLANS, BUT WHICH ARE OBVIOUSLY NECESSARY TO MAKE A COMPLETE SYSTEM, EXCEPTING ONLY THOSE PORTIONS THAT ARE SPECIFICALLY MENTIONED HEREIN OR PLAINLY MARKED ON THE ACCOMPANYING DRAWINGS AS BEING INSTALLED UNDER ANOTHER SECTION OF THE SPECIFICATION.
3. IT SHALL BE THE CONTRACTORS RESPONSIBILITY TO VERIFY AVAILABLE SPACES FOR INSTALLING THE WORK.
4. COORDINATION: THE DRAWINGS ARE DIAGRAMMATIC & INTENDED TO SHOW SCOPE. CONTRACTOR SHALL COORDINATE HIS WORK WITH OTHER TRADES TO PROVIDE BEST ARRANGEMENT OF ALL DUCT, PIPES, CONDUIT, ETC.
5. WORKMANSHIP: THE WORK SHALL BE ACCOMPLISHED BY THE USE OF COMPETENT MECHANICS SKILLED IN THEIR TRADE. THE ENGINEER AND ARCHITECT SHALL HAVE THE RIGHT TO INTERPRET COMPLIANCE OF WORKMANSHIP WITH THE CONTRACT DOCUMENTS.
6. MATERIALS: ALL MATERIALS, APPLIANCES & EQUIPMENT SHALL BE NEW & THE BEST OF THEIR RESPECTIVE KIND. FREE FROM ALL DEFECTS AND OF THE MAKE, BRAND, AND QUANTITY SPECIFIED.
7. CLEAN–UP: UPON COMPLETION OF THE WORK UNDER THIS SECTION THE CONTRACTOR SHALL REMOVE ALL SURPLUS MATERIALS. EQUIPMENT & DEBRIS INCIDENTAL TO THIS WORK & LEAVE THE PREMISES CLEAN AND ORDERLY.

RECOMMENDATIONS AND CONCLUSIONS OF SOILS REPORT No. 10-18020PW, DATED FEBRUARY 21, 2018 BY UNITED-HEIDER INSPECTION GROUP SHALL BE THOROUGHLY COMPLIED WITH. WHERE CONFLICTING INFORMATION BETWEEN THIS GRADING PLAN AND/OR THE PROJECT EARTHWORK SPECIFICATIONS & THE MENTIONED REPORT OCCUR, NOTIFY THE OWNER.

GRADING PLANS, DRAINAGE IMPROVEMENTS, ROAD AND ACCESS REQUIREMENTS AND ENVIRONMENTAL HEALTH CONSIDERATIONS SHALL COMPLY WITH ALL LOCAL ORDINANCES.

COMPTON

Date: July 12, 2016

To: Division of State Architect, DSA

From: David Dent, Chief Building Official

Re: Compton Community College

To whom it may concern,

Most of Compton has been identified to be in flood **Zone X (Unshaded)** or **Zone X (Shaded).** These areas have no base flood elevations and are protected from the base flood by a credited flood protection system. The City of Compton does not require new projects in these zones to be built with specific design considerations to protect them from a possible flood. The City of Compton does not require the finish floor of a building to be elevated above a base flood elevation in these zones. The City of Compton does not require special foundations (such as concrete versus wood) for new projects based on if they are in a Zone X (shaded) or Zone X (unshaded).

Sincerely,

David Dent
Chief Building Official

205 S. Willowbrook Avenue, Compton, CA 90220 * (310) 605-5509 * (310) 605-5598

BIRTHING A NEW COMPTON

IDENTIFICATION STAMP
DIV. OF THE STATE ARCHITECT
APP. 03-119458 INC:
REVIEWED FOR
SS ☑ FLS ☑ ACS ☑
DATE:05/23/2019

DIVISION OF STATE ARCHITECT
355 South Grand Avenue, Suite 2100
Los Angeles, California. 90012
ph: (213) 897-3995 Fax: (213) 897-3159
agency

tBP
architecture
planning
interiors

tBP/Architecture
4611 Teller Avenue
Newport Beach, CA 92660
ph: 949.673.0300 fx: 949.732.3695
architect

FPL and Associates, Inc.
Traffic • Transportation • Civil
30 Corporate Park, Suite 401
Irvine, CA 92606
(949) 252–1688

REGISTERED PROFESSIONAL ENGINEER ALAN WING-CHI LEE No. C 34971 Exp. 06-30-19 CIVIL STATE OF CALIFORNIA

ALAN WING-CHI LEE R.C.E. 34971 EXP. 06-30-19
consultant

COMPTON COLLEGE
INSTRUCTIONAL BUILDING No. 2
COMPTON COMMUNITY COLLEGE DISTRICT
1111 E. ARTESIA BLVD. COMPTON, CA.

owner

tBP project number : 20998.00

file name:

drawn by: checked by:

date: 04/08/2019

Rev:	date:	description:

THIS DRAWING AND THE DESIGNS, DEPICTIONS, IDEAS AND OTHER INFORMATION CONTAINED HEREIN CONSTITUTE UNPUBLISHED WORK OF tBP/ARCHITECTURE AND SHALL REMAIN THE PROPERTY OF tBP/ARCHITECTURE IN PERPETUITY. NO PART THEREOF SHALL BE REPRODUCED, DISCLOSED, DISTRIBUTED, SOLD, PUBLISHED OR OTHERWISE USED IN ANY WAY WITHOUT THE ADVANCED EXPRESS WRITTEN CONSENT OF tBP/ARCHITECTURE.

drawing title:

SITE IMPROVEMENT PLAN TITLE SHEET

drawing no.:

C1.0

drawing of

Plot Date: 4/6/2019 12:36:59 PM Last Save By: ron.conedy Login: Ron Conedy S:\Jobs\27577 - TBP Architects\27577\ - Compton CCD Instruction Building 2\Civil\Instructional Building 2 - C1.0 Title Sheet.dwg

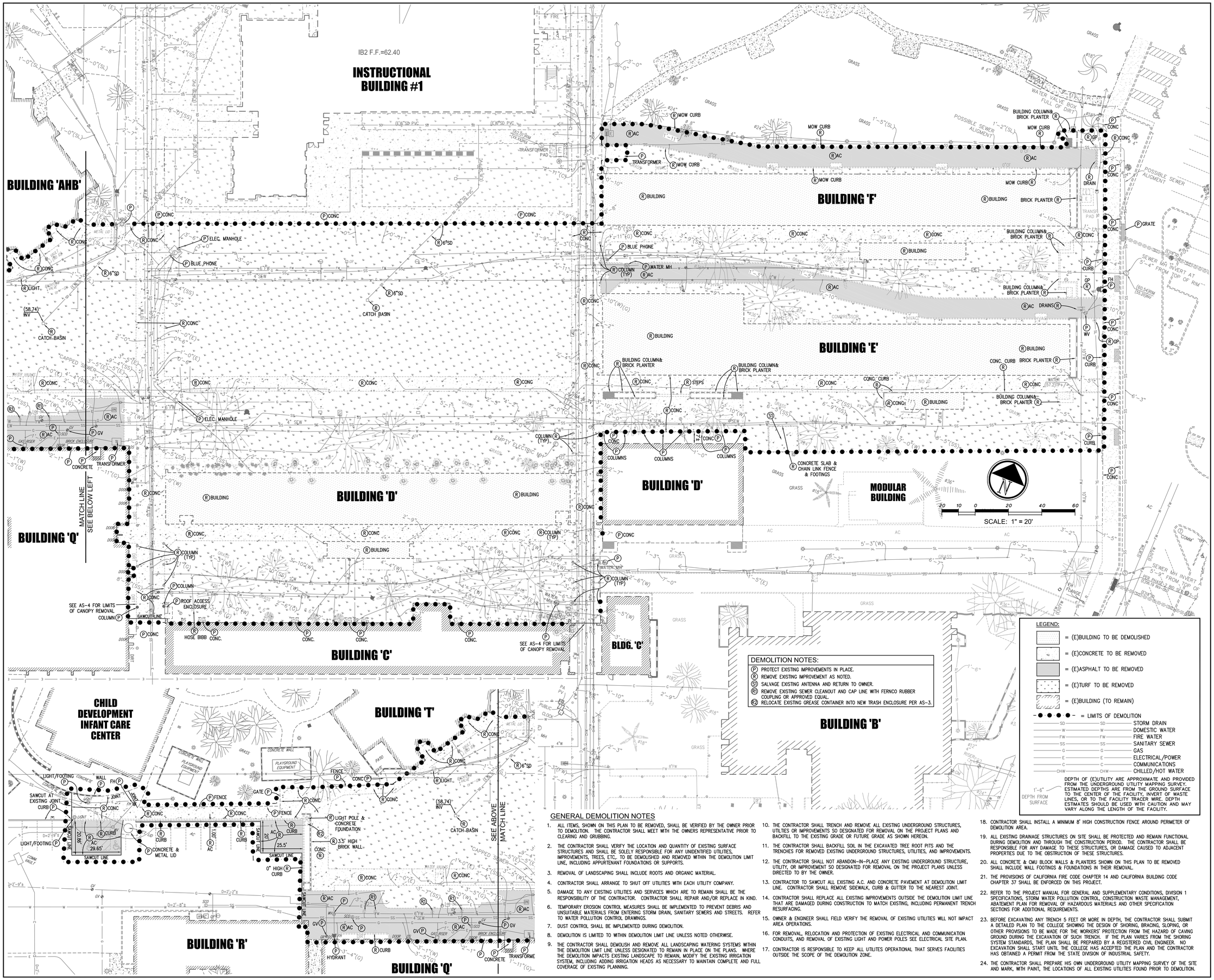

DEMOLITION NOTES:

- (P) PROTECT EXISTING IMPROVEMENTS IN PLACE.
- (R) REMOVE EXISTING IMPROVEMENT AS NOTED.
- (S1) SALVAGE EXISTING ANTENNA AND RETURN TO OWNER.
- (R1) REMOVE EXISTING SEWER CLEANOUT AND CAP LINE WITH FERNCO RUBBER COUPLING OR APPROVED EQUAL.
- (R2) RELOCATE EXISTING GREASE CONTAINER INTO NEW TRASH ENCLOSURE PER AS-3.

GENERAL DEMOLITION NOTES

1. ALL ITEMS, SHOWN ON THIS PLAN TO BE REMOVED, SHALL BE VERIFIED BY THE OWNER PRIOR TO DEMOLITION. THE CONTRACTOR SHALL MEET WITH THE OWNERS REPRESENTATIVE PRIOR TO CLEARING AND GRUBBING.
2. THE CONTRACTOR SHALL VERIFY THE LOCATION AND QUANTITY OF EXISTING SURFACE STRUCTURES AND SHALL BE SOLELY RESPONSIBLE FOR ANY UNIDENTIFIED UTILITIES, IMPROVEMENTS, TREES, ETC., TO BE DEMOLISHED AND REMOVED WITHIN THE DEMOLITION LIMIT LINE, INCLUDING APPURTENANT FOUNDATIONS OR SUPPORTS.
3. REMOVAL OF LANDSCAPING SHALL INCLUDE ROOTS AND ORGANIC MATERIAL.
4. CONTRACTOR SHALL ARRANGE TO SHUT OFF UTILITIES WITH EACH UTILITY COMPANY.
5. DAMAGE TO ANY EXISTING UTILITIES AND SERVICES WHICH ARE TO REMAIN SHALL BE THE RESPONSIBILITY OF THE CONTRACTOR. CONTRACTOR SHALL REPAIR AND/OR REPLACE IN KIND.
6. TEMPORARY EROSION CONTROL MEASURES SHALL BE IMPLEMENTED TO PREVENT DEBRIS AND UNSUITABLE MATERIALS FROM ENTERING STORM DRAIN, SANITARY SEWERS AND STREETS. REFER TO WATER POLLUTION CONTROL DRAWINGS.
7. DUST CONTROL SHALL BE IMPLEMENTED DURING DEMOLITION.
8. DEMOLITION IS LIMITED TO WITHIN DEMOLITION LIMIT LINE UNLESS NOTED OTHERWISE.
9. THE CONTRACTOR SHALL DEMOLISH AND REMOVE ALL LANDSCAPING WATERING SYSTEMS WITHIN THE DEMOLITION LIMIT LINE UNLESS DESIGNATED TO REMAIN IN PLACE ON THE PLANS. WHERE THE DEMOLITION IMPACTS EXISTING LANDSCAPE TO REMAIN, MODIFY THE EXISTING IRRIGATION SYSTEM, INCLUDING ADDING IRRIGATION HEADS AS NECESSARY TO MAINTAIN COMPLETE AND FULL COVERAGE OF EXISTING PLANNING.
10. THE CONTRACTOR SHALL TRENCH AND REMOVE ALL EXISTING UNDERGROUND STRUCTURES, UTILITIES OR IMPROVEMENTS SO DESIGNATED FOR REMOVAL ON THE PROJECT PLANS AND BACKFILL TO THE EXISTING GRADE OR FUTURE GRADE AS SHOWN HEREON.
11. THE CONTRACTOR SHALL BACKFILL SOIL IN THE EXCAVATED TREE ROOT PITS AND THE TRENCHES FOR REMOVED EXISTING UNDERGROUND STRUCTURES, UTILITIES, AND IMPROVEMENTS.
12. THE CONTRACTOR SHALL NOT ABANDON-IN-PLACE ANY EXISTING UNDERGROUND STRUCTURE, UTILITY, OR IMPROVEMENT SO DESIGNATED FOR REMOVAL ON THE PROJECT PLANS UNLESS DIRECTED TO BY THE OWNER.
13. CONTRACTOR TO SAWCUT ALL EXISTING A.C. AND CONCRETE PAVEMENT AT DEMOLITION LIMIT LINE. CONTRACTOR SHALL REMOVE SIDEWALK, CURB & GUTTER TO THE NEAREST JOINT.
14. CONTRACTOR SHALL REPLACE ALL EXISTING IMPROVEMENTS OUTSIDE THE DEMOLITION LIMIT LINE THAT ARE DAMAGED DURING CONSTRUCTION TO MATCH EXISTING, INCLUDING PERMANENT TRENCH RESURFACING.
15. OWNER & ENGINEER SHALL FIELD VERIFY THE REMOVAL OF EXISTING UTILITIES WILL NOT IMPACT AREA OPERATIONS.
16. FOR REMOVAL, RELOCATION AND PROTECTION OF EXISTING ELECTRICAL AND COMMUNICATION CONDUITS, AND REMOVAL OF EXISTING LIGHT AND POWER POLES SEE ELECTRICAL SITE PLAN.
17. CONTRACTOR IS RESPONSIBLE TO KEEP ALL UTILITES OPERATIONAL THAT SERVES FACILITIES OUTSIDE THE SCOPE OF THE DEMOLITION ZONE.
18. CONTRACTOR SHALL INSTALL A MINIMUM 8' HIGH CONSTRUCTION FENCE AROUND PERIMETER OF DEMOLITION AREA.
19. ALL EXISTING DRAINAGE STRUCTURES ON SITE SHALL BE PROTECTED AND REMAIN FUNCTIONAL DURING DEMOLITION AND THROUGH THE CONSTRUCTION PERIOD. THE CONTRACTOR SHALL BE RESPONSIBLE FOR ANY DAMAGE TO THESE STRUCTURES, OR DAMAGE CAUSED TO ADJACENT PROPERTIES DUE TO THE OBSTRUCTION OF THESE STRUCTURES.
20. ALL CONCRETE & CMU BLOCK WALLS & PLANTERS SHOWN ON THIS PLAN TO BE REMOVED SHALL INCLUDE WALL FOOTINGS & FOUNDATIONS IN THEIR REMOVAL.
21. THE PROVISIONS OF CALIFORNIA FIRE CODE CHAPTER 14 AND CALIFORNIA BUILDING CODE CHAPTER 37 SHALL BE ENFORCED ON THIS PROJECT.
22. REFER TO THE PROJECT MANUAL FOR GENERAL AND SUPPLEMENTARY CONDITIONS, DIVISION 1 SPECIFICATIONS, STORM WATER POLLUTION CONTROL, CONSTRUCTION WASTE MANAGEMENT, ABATEMENT PLAN FOR REMOVAL OF HAZARDOUS MATERIALS AND OTHER SPECIFICATION SECTIONS FOR ADDITIONAL REQUIREMENTS.
23. BEFORE EXCAVATING ANY TRENCH 5 FEET OR MORE IN DEPTH, THE CONTRACTOR SHALL SUBMIT A DETAILED PLAN TO THE COLLEGE SHOWING THE DESIGN OF SHORING, BRACING, SLOPING, OR OTHER PROVISIONS TO BE MADE FOR THE WORKERS' PROTECTION FROM THE HAZARD OF CAVING GROUND DURING THE EXCAVATION OF SUCH TRENCH. IF THE PLAN VARIES FROM THE SHORING SYSTEM STANDARDS, THE PLAN SHALL BE PREPARED BY A REGISTERED CIVIL ENGINEER. NO EXCAVATION SHALL START UNTIL THE COLLEGE HAS ACCEPTED THE PLAN AND THE CONTRACTOR HAS OBTAINED A PERMIT FROM THE STATE DIVISION OF INDUSTRIAL SAFETY.
24. THE CONTRACTOR SHALL PREPARE HIS OWN UNDERGROUND UTILITY MAPPING SURVEY OF THE SITE AND MARK, WITH PAINT, THE LOCATIONS OF ALL EXISTING UTILITIES FOUND PRIOR TO DEMOLITION.

IDENTIFICATION STAMP
DIV. OF THE STATE ARCHITECT
APP. 03-119458 INC:
REVIEWED FOR
SS ☑ FLS ☑ ACS ☑
DATE:05/23/2019

DIVISION OF STATE ARCHITECT
355 South Grand Avenue, Suite 2100
Los Angeles, California. 90012
ph: (213) 897-3995 Fax: (213) 897-3159
agency

tBP architecture planning interiors
tBP/Architecture
4611 Teller Avenue
Newport Beach, CA 92660
ph: 949.673.0300 fx: 949.732.3895
architect

FPL and Associates, Inc.
Traffic • Transportation • Civil
30 Corporate Park, Suite 401
Irvine, CA 92606
(949) 252-1688
ALAN WING-CHI LEE
R.C.E. 34971
EXP. 09-30-19
consultant

COMPTON COLLEGE
INSTRUCTIONAL BUILDING No. 2

COMPTON COMMUNITY COLLEGE DISTRICT
1111 E. ARTESIA BLVD. COMPTON, CA.

owner

tBP project number : 20998.00
file name:
drawn by: checked by:
date: 04/08/2019

Rev: date: description:

THIS DRAWING AND THE DESIGNS, DEPICTIONS, IDEAS AND OTHER INFORMATION CONTAINED HEREIN CONSTITUTE UNPUBLISHED WORK OF tBP/ARCHITECTURE AND SHALL REMAIN THE PROPERTY OF tBP/ARCHITECTURE IN PERPETUITY. NO PART THEREOF SHALL BE REPRODUCED, DISCLOSED, DISTRIBUTED, SOLD, PUBLISHED OR OTHERWISE USED IN ANY WAY WITHOUT THE ADVANCED EXPRESS WRITTEN CONSENT OF tBP/ARCHITECTURE.

drawing title:

DEMOLITION PLAN

drawing no.:

C1.1

drawing of

Plot Date: 4/9/2019 1:43:23 PM Last Save By: ron.conrely Login: Ron Conrely S:\Jobs\21757 - TBP Architects\21757w - Compton CCD Instruction Building 2\Civil\Instructional Building 2 - C1.1 Demolition Plan.dwg

IB2 F.F.=62.40

(E)INSTRUCTIONAL BUILDING #1

CHILD DEVELOPMENT CENTER

F.F.=62.50

INSTRUCTIONAL BUILDING #2

NOTE: BOTTOM OF OVER-EXCAVATION SHOULD BE 52.58 BASED ON SOILS ENGINEERS STATEMENT OF 5'-0" BELOW THE MAT FOUNDATION. BOTTOM OF MAT FOUNDATION IS 4'-11" BELOW F.F.

BUILDING 'D'

BUILDING 'Q'

BUILDING 'C'

BLDG. 'C'

BUILDING 'B'

CHILD DEVELOPMENT INFANT CARE CENTER

CHILD DEVELOPMENT CENTER

BUILDING 'R'

BUILDING 'Q'

MATCH LINE SEE BELOW LEFT

SEE ABOVE MATCH LINE

SCALE: 1" = 20'

CONSTRUCTION NOTES

1. PROTECT EXISTING IMPROVEMENTS IN PLACE.
2A. CONSTRUCT CONCRETE PAVEMENT SECTION (LIGHT DUTY), PER TABLE 1 ON SHEET C1.3.
2B. CONSTRUCT CONCRETE PAVEMENT SECTION (HEAVY DUTY), PER TABLE 1 ON SHEET C1.3.
3A. CONSTRUCT 12" SQUARE CATCH BASIN PER DETAIL 3A ON SHEET C1.4. INSTALL WITH STEEL GALVANIZED GRATE (PARKWAY RATED, A.D.A, BOLT-DOWN TYPE).
3B. CONSTRUCT 24" SQUARE CATCH BASIN PER DETAIL 3B ON SHEET C1.4. INSTALL WITH STEEL GALVANIZED GRATE (PARKWAY RATED, A.D.A, BOLT-DOWN TYPE).
3C. CONSTRUCT 24" SQUARE CATCH BASIN PER DETAIL 3B ON SHEET C1.4. INSTALL WITH STEEL GALVANIZED GRATE (TRAFFIC RATED, A.D.A, BOLT-DOWN TYPE).
4A. CONSTRUCT 4" SDR-35 P.V.C. DRAINAGE PIPE. SEE CORRESPONDING TRENCH DETAILS ON SHEET C1.3
4B. CONSTRUCT 6" SDR-35 P.V.C. DRAINAGE PIPE. SEE CORRESPONDING TRENCH DETAILS ON SHEET C1.3
4C. CONSTRUCT 8" SDR-35 P.V.C. DRAINAGE PIPE. SEE CORRESPONDING TRENCH DETAILS ON SHEET C1.3
4D. CONSTRUCT 10" SDR-35 P.V.C. DRAINAGE PIPE. SEE CORRESPONDING TRENCH DETAILS ON SHEET C1.3
4E. CONSTRUCT 12" SDR-35 P.V.C. DRAINAGE PIPE. SEE CORRESPONDING TRENCH DETAILS ON SHEET C1.3
5. CONNECT UNDERGROUND STORM DRAIN TO ROOF DRAIN DOWNSPOUT WITH FERNCO COUPLING OR APPROVED EQUAL.
6. CORE DRILL INTO BACK OF EXISTING CATCH BASIN AND INSTALL PIPE. SEAL VOIDS BETWEEN PIPE AND CATCH BASIN WITH CEMENT MORTAR.
7. BREAK INTO EXISTING STORM DRAIN MANHOLE PER S.P.P.W.C. STD. PLAN 208-2.
8. CONSTRUCT STORM DRAIN CLEANOUT PER DETAIL S3 ON C1.6.
9. CONSTRUCT STORM DRAIN MANHOLE PER S.P.P.W.C. STD. PLAN 321-2.
10. CONSTRUCT TRASH SLAB CURB PER DETAIL 10 ON C1.4.
11. ADJUST EXISTING CLEANOUT OR VALVE LID TO BE FLUSH WITH ULTIMATE FINISH SURFACE.
12. CONSTRUCT CONCRETE CURB PER DETAIL 12 ON SHEET C1.3 AND GRADES HEREON.
13. CONSTRUCT TRUNCATED DOMES PER ARCHITECTURAL PLANS.
14. CONSTRUCT 4" THICK ASPHALT OVER 6" CRUSHED AGG. BASE OVER 12" OVER-EXCAVATED SOIL. ASPHALT CLASS AND GRADE SHALL BE C2–PG 64–10 PER S.S.P.W.C. SECTION 203–6.4.3. APPLY 2 COATS OF ASPHALT BASED SEAL COAT OVER ASPHALT PER S.S.P.W.C. SECTION 203–9 A MINIMUM OF 30 DAYS AFTER ASPHALT HAS BEEN INSTALLED.
15. VENDING MACHINES BY OWNER ON 6–INCH HIGH CONCRETE PAD, SEE AS–3.

LEGEND:

- = NEW DECOMPOSED GRANITE (PER LANDSCAPE)
- = NEW CONCRETE
- = NEW BUILDING OUTLINE
- = NEW TURF (PER LANDSCAPE)
- = (E)BUILDING (TO REMAIN)
- = LIMITS OF WORK

SD	STORM DRAIN
W	DOMESTIC WATER
FW	FIRE WATER
SS	SANITARY SEWER
G	GAS
E	ELECTRICAL/POWER
C	COMMUNICATIONS
CHW	CHILLED/HOT WATER

IDENTIFICATION STAMP
DIV. OF THE STATE ARCHITECT
APP. 03-119458 INC:
REVIEWED FOR
SS ☑ FLS ☑ ACS ☑
DATE:05/23/2019

DIVISION OF STATE ARCHITECT
355 South Grand Avenue, Suite 2100
Los Angeles, California. 90012
ph: (213) 897-3995 Fax: (213) 897-3159
agency

tBP architecture planning interiors
tBP/Architecture
4611 Teller Avenue
Newport Beach, CA 92660
ph: 949.673.0300 fx: 949.732.3895
architect

FPL and Associates, Inc.
Traffic • Transportation • Civil
30 Corporate Park, Suite 401
Irvine, CA 92606
(949) 252–1688

REGISTERED PROFESSIONAL ENGINEER
ALAN WING-CHI LEE
No. C 34971
Exp. 09-30-19
CIVIL
STATE OF CALIFORNIA

ALAN WING-CHI LEE R.C.E. 34971 EXP. 09-30-19

consultant

COMPTON COLLEGE
INSTRUCTIONAL BUILDING No. 2

COMPTON COMMUNITY COLLEGE DISTRICT
1111 E. ARTESIA BLVD. COMPTON, CA.

owner

tBP project number : 20998.00
file name:
drawn by: checked by:
date: 04/08/2019

Rev:	date:	description:

THIS DRAWING AND THE DESIGNS, DEPICTIONS, IDEAS AND OTHER INFORMATION CONTAINED HEREON CONSTITUTE UNPUBLISHED WORK OF tBP/ARCHITECTURE AND SHALL REMAIN THE PROPERTY OF tBP/ARCHITECTURE IN PERPETUITY. NO PART THEREOF SHALL BE REPRODUCED, DISCLOSED, DISTRIBUTED, SOLD, PUBLISHED OR OTHERWISE USED IN ANY WAY WITHOUT THE ADVANCED EXPRESS WRITTEN CONSENT OF tBP/ARCHITECTURE.

drawing title:

GRADING PLAN

drawing no.:

C1.2

drawing of

Plot Date: 4/9/2019 1:44:31 PM Last Save By: ron.canedy Login: Ron Canedy S:\Jobs\27577 - TBP Architects\27577w - Compton CCD Instruction Building 2\Civil\Instructional Building 2 - C1.2 Grading Plan.dwg

TRENCHING DETAILS - WATER, STORM DRAIN & SANITARY SEWER

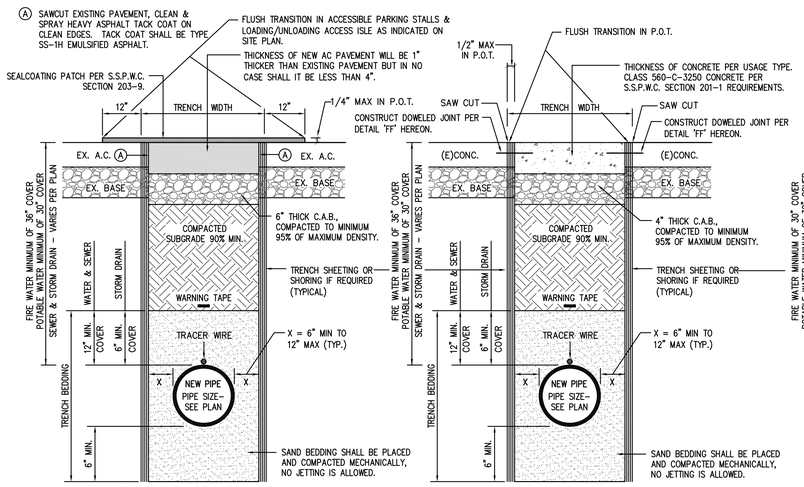

EXISTING ASPHALT AREAS
N.T.S.

EXISTING CONCRETE AREAS
N.T.S.

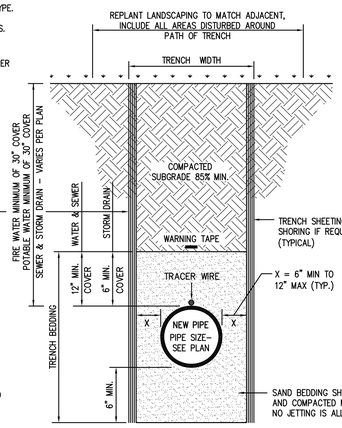

NEW OR EXISTING LANDSCAPED AREAS
N.T.S.

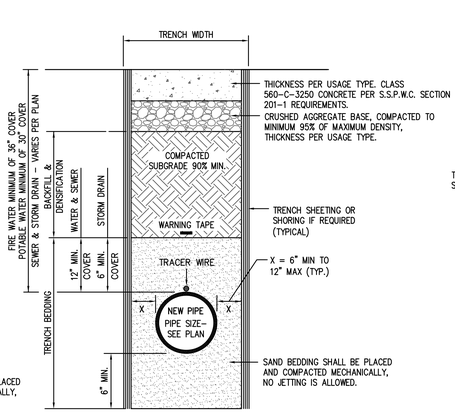

NEW CONCRETE AREAS
N.T.S.

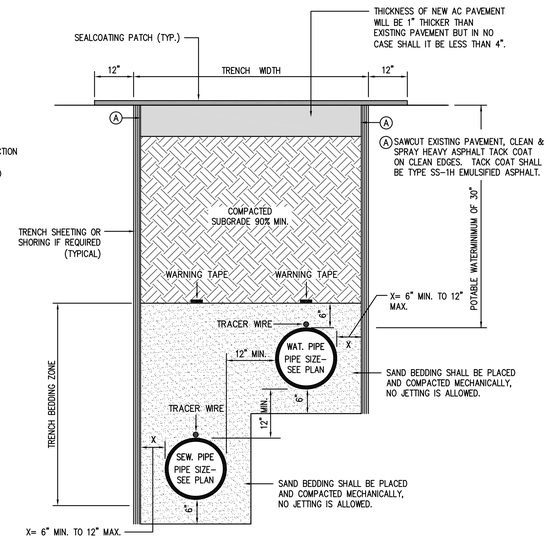

ALTERNATE TRENCH DETAIL IN EXISTING ASPHALT CONCRETE AREAS
(ALLOWABLE WHERE CONDITIONS APPLY)
NOT TO SCALE

USAGE TYPE	TABLE 1 CONCRETE PAVEMENT STRUCTURAL SECTIONS
2A TYPE 1	4" THICK CONCRETE PAVEMENT OVER COMPACTED SUBGRADE PER DETAIL BELOW
2B TYPE 2	8" THICK CONCRETE PAVEMENT OVER 6" THICK BASE OVER COMPACTED SUBGRADE PER DETAIL BELOW

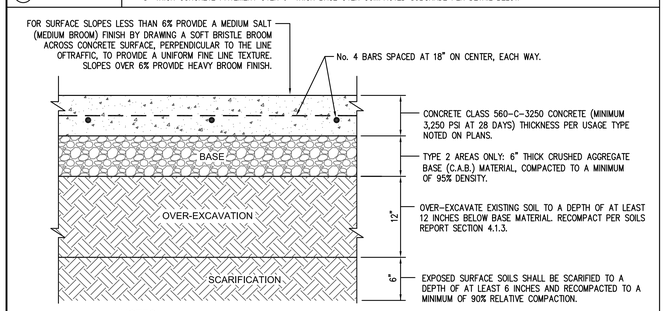

NOTES:
1. ADJACENT PAVING, WHERE OCCURS, TO BE FLUSH WITH TOP EDGE OF SLAB.
2. ALL CONCRETE WALKS SHALL BE ASTM C-150 TYPE II PORTLAND CEMENT.
3. ALL CONCRETE WALKS SHALL BE 1" MAXIMUM COARSE AGGREGATE SIZE CONFORMING TO GRADING 'C' OF THE S.P.P.W.C. SECTION 201-1.3.2(A).

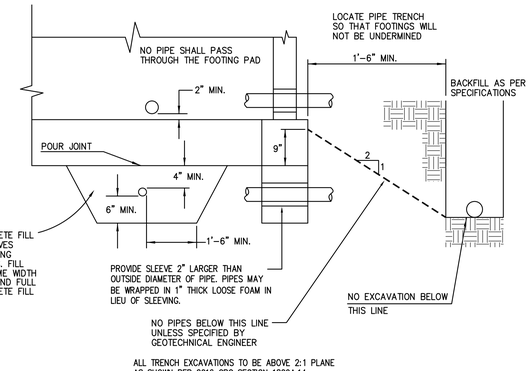

TYPICAL PIPE TRENCH / FOOTING DETAIL
NOT TO SCALE

TRENCHING NOTICE TO CONTRACTOR

WATER PIPES SHALL NOT BE RUN OR LAID IN THE SAME TRENCH AS BUILDING SEWER UNLESS BOTH OF THE FOLLOWING CONDITIONS ARE MET PER 2016 CALIFORNIA PLUMBING CODE, SECTION 609.2:

THE BOTTOM OF THE WATER PIPE, AT ALL POINTS, SHALL BE AT LEAST TWELVE (12) INCHES ABOVE THE TOP OF THE SEWER LINE.

THE WATER PIPE SHALL BE PLACED ON A SOLID SHELF EXCAVATED AT ONE SIDE OF THE COMMON TRENCH WITH A MINIMUM CLEAR HORIZONTAL DISTANCE OF AT LEAST TWELVE (12) INCHES FROM THE SEWER.

TRENCH EXCAVATION, BEDDING, & BACKFILL NOTES:

EXCAVATION NOTE: THE 2016 CALIFORNIA OCCUPATIONAL SAFETY AND HEALTH REGULATIONS (CAL/OSHA) WILL REQUIRE A PERMIT FOR THE CONSTRUCTION OF TRENCHES OR EXCAVATIONS WHICH ARE FIVE (5) FEET OR DEEPER AND INTO WHICH A PERSON IS REQUIRED TO DESCEND. FOR PERMIT PURPOSES, 'DESCEND' MEANS TO ENTER ANY PART OF THE TRENCH OR EXCAVATION ONCE THE EXCAVATION HAS ATTAINED A DEPTH OF 5 FEET OR MORE. FOR REGULATIONS RELATING TO PERMITS FOR EXCAVATIONS AND TRENCHES, REFER TO THE CALIFORNIA CODE OF REGULATIONS TITLE 8, CHAPTER 3.2, ARTICLE 2, SECTION 341 OF THE CALIFORNIA OCCUPATIONAL SAFETY AND HEALTH REGULATIONS (CAL/OSHA)

THE CONTRACTOR SHALL SUBMIT A DETAIL SHOWING THE DESIGN OR SHORING; BRACING SLOPING OR OTHER PROVISIONS TO BE MADE FOR WORKER PROTECTION FROM THE HAZARDS OF CAVING GROUND DURING THE EXCAVATION. THE PLAN SUBMITTED SHALL BE SIGNED BY A REGISTERED CIVIL OR STRUCTURAL ENGINEER CERTIFIED THAT THE PLAN COMPLIES WITH ALL OSHA CONSTRUCTION SAFETY ORDERS.

BEDDING MATERIAL SHALL BE COARSE SAND WITH SAND EQUIVALENT OF 35 OR GREATER. NO ANGULAR STONES OR PEA GRAVELS WILL BE ALLOWED IN PIPE BEDDING.

COMPACTION METHODS: ALL BEDDING & BACKFILL COMPACTION SHALL BE BY HAND-OPERATED, PLATE-TYPE, VIBRATORY, OR OTHER SUITABLE HAND-TAMPERS IN AREAS NOT ACCESSIBLE TO LARGER ROLLERS OR COMPACTERS. EXTREME CARE SHALL BE TAKEN TO AVOID DAMAGE TO CONDUITS, PIPES, AND ANY APPURTENANCES. WATER DENSIFICATION BY INUNDATION OR JETTING SHALL NOT BE PERMITTED WITHOUT PRIOR WRITTEN APPROVAL FROM CIVIL ENGINEER.

SHEETING: WHEN EXCAVATION DEPTHS OR SOIL CONDITIONS REQUIRE SHORING OR USE OF A TRENCH BOX, THE BOTTOM OF THE SHORING OR TRENCH BOX SHOULD BE PLACED NO LOWER THEN THE TOP OF THE PIPE. THIS PREVENTS DISRUPTION OF THE BACKFILL ENVELOPE WHEN REMOVING THE SHORING OR TRENCH BOX. IF THIS PRACTICE CANNOT BE FOLLOWED, CONSIDERATION SHOULD BE GIVEN TO LEAVING THE SHORING IN PLACE.

* GENERAL NOTES:

IF 90% COMPACTION IS NOT ATTAINABLE DURING CONSTRUCTION THE USE OF A SLURRY BACKFILL MAY BE SUBSTITUTED. SAND SLURRY SHALL CONSIST OF 1 SACK PORTLAND CEMENT (CLASS 100-E-100) PER CUBIC YARD OF SAND SLURRY MIX.

WARNING TAPE NOTES (POTABLE WATER):

A METALLIC LINED TAPED FOR UNDERGROUND PIPES, MARKED "CAUTION BURIED WATER LINE BELOW", IN POLYETHYLENE FILM COLOR BLUE, INSTALLED ABOVE PIPE, 6" WIDE.

WARNING TAPE NOTES (FIRE WATER):

A METALLIC LINED TAPED FOR UNDERGROUND PIPES, MARKED "CAUTION FIRE LINE BELOW", IN POLYETHYLENE FILM COLOR RED, INSTALLED ABOVE PIPE, 6" WIDE.

WARNING TAPE NOTES (STORM DRAIN):

A METALLIC LINED TAPED FOR UNDERGROUND PIPES, MARKED "CAUTION STORM DRAIN LINE BELOW", IN POLYETHYLENE FILM COLOR GREEN, INSTALLED ABOVE PIPE, 6" WIDE.

WARNING TAPE NOTES (SANITARY SEWER):

A METALLIC LINED TAPED FOR UNDERGROUND PIPES, MARKED "CAUTION BURIED SEWER LINE BELOW", IN POLYETHYLENE FILM COLOR GREEN, INSTALLED ABOVE PIPE, 6" WIDE.

TRACER WIRE NOTES:

COPPER TRACER WIRE SHALL BE INSTALLED ON ALL NON-METALLIC PIPELINES, 2" AND GREATER, JUST ABOVE THE HORIZONTAL CENTERLINE OF THE PIPE. THE COPPER WIRE SHALL BE #14 AWG.

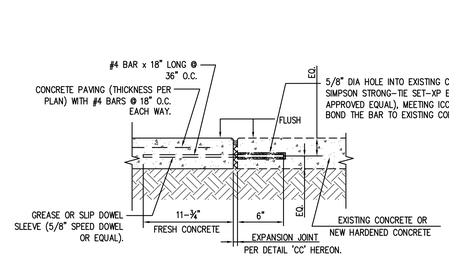

NOTE: 1. VERTICAL CHANGE IN ELEVATION ALONG ACCESSIBLE PATH OF TRAVEL CANNOT EXCEET 1/4" PER CBC 11B-303.2

2. LEVEL CHANGE BETWEEN 1/4"-1/2" MUST BE BEVELED AT 1:2 MAX PER CBC 11B-303.3

AA EXPANSION JOINT (E.J.) WITH REBAR
NOT TO SCALE

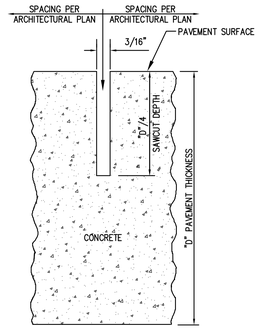

BB CONTROL JOINT (C.J.)
NOT TO SCALE

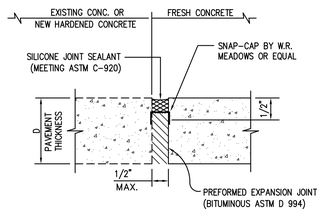

CC EXPANSION JOINT (E.J.)
NOT TO SCALE

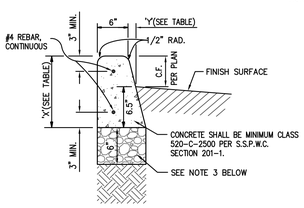

12 CONCRETE CURB DETAIL
NOT TO SCALE

CURB FACE	0"	4"	5"	6"	8"	9"
'X'	6.5"	10.5"	11.5"	12.5"	14.5"	15.5"
'Y'	0"	1"	1.25"	1.5"	2"	2"

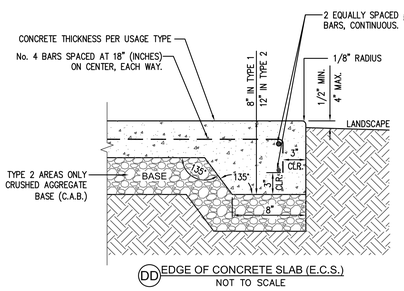

DD EDGE OF CONCRETE SLAB (E.C.S.)
NOT TO SCALE

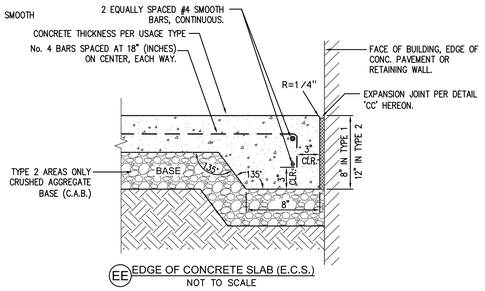

EE EDGE OF CONCRETE SLAB (E.C.S.)
NOT TO SCALE

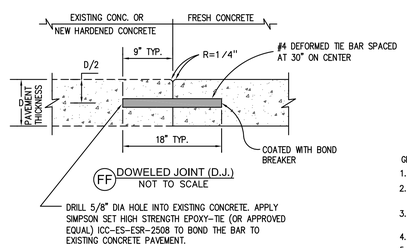

FF DOWELED JOINT (D.J.)
NOT TO SCALE

GENERAL NOTES:
1. ALL EXPOSED EDGES SHALL HAVE A 1/2" RADIUS.
2. CONTROL JOINTS SHALL BE PLACED IN CURBING AT REGULAR INTERVALS OF 10'. EXPANSION JOINTS AT 30' INTERVALS, AND AT DRIVE APPROACHES, B.C.'S, E.C.'S, CROSS GUTTERS AND CATCH BASIN TRANSITIONS.
3. A 6" THICK LAYER OF CRUSHED BASE MATERIAL SHALL BE PLACED UNDER ALL CURB. MINIMUM COMPACTION OF 90% ON SUBGRADE AND 95% ON AGGREGATE BASE IS REQUIRED.
4. CONCRETE CURB SHALL BE MINIMUM CLASS 520-C-2500 PER S.S.P.W.C. SECTION 201-1.
5. PLACE CONTINUOUS #4 REBARS, 3" MINIMUM FROM TOP AND 3" MINIMUM FROM BOTTOM OF CURB.

IDENTIFICATION STAMP
DIV. OF THE STATE ARCHITECT
APP. 03-119458 INC:
REVIEWED FOR
SS ☑ FLS ☑ ACS ☑
DATE:05/23/2019

DIVISION OF STATE ARCHITECT
355 South Grand Avenue, Suite 2100
Los Angeles, California. 90012
ph: (213) 897-3995 Fax: (213) 897-3159
agency

tBP
architecture
planning
interiors
tBP/Architecture
4611 Teller Avenue
Newport Beach, CA 92660
ph: 949.673.0300 fx: 949.732.3695
architect

FPL and Associates, Inc.
Traffic • Transportation • Civil
30 Corporate Park, Suite 401
Irvine, CA 92606
(949) 252-1688
REGISTERED PROFESSIONAL ENGINEER ALAN WING-CHI LEE No. C 34971 Exp. 06-30-19 CIVIL STATE OF CALIFORNIA
ALAN WING-CHI LEE R.C.E. 34971 EXP. 06-30-19
consultant

COMPTON COLLEGE
INSTRUCTIONAL BUILDING No. 2

COMPTON COMMUNITY COLLEGE DISTRICT
1111 E. ARTESIA BLVD. COMPTON, CA.

owner

tBP project number : 20998.00
file name:
drawn by: checked by:
date: 04/08/2019

Rev:	date:	description:

THIS DRAWING AND THE DESIGNS, DEPICTIONS, IDEAS AND OTHER INFORMATION CONTAINED HEREIN CONSTITUTE UNPUBLISHED WORK OF tBP/ARCHITECTURE AND SHALL REMAIN THE PROPERTY OF tBP/ARCHITECTURE IN PERPETUITY. NO PART THEREOF SHALL BE REPRODUCED, DISCLOSED, DISTRIBUTED, SOLD, PUBLISHED OR OTHERWISE USED IN ANY WAY WITHOUT THE ADVANCED EXPRESS WRITTEN CONSENT OF tBP/ARCHITECTURE.

drawing title:

GRADING DETAILS

drawing no.:

C1.3

drawing of

Plot Date: 4/6/2019 12:30:34 PM Last Save By: ron.canedy Login: Ron Canedy S:\Jobs\2757 - TBP Architects\2757w - Compton CCD Instruction Building 2\Civil\Instructional Building 2 - C1.3 Grading Details.dwg

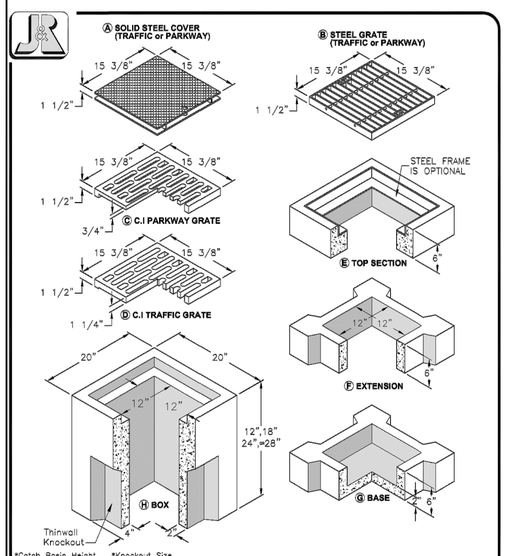

*Catch Basin Height — *Knockout Size

12" High	8"W X 6"H
18" High	8"W X 13"H
24" High	7"W X 19"H
28" High	7"W X 19"H

NOTES
1. Steel Traffic Frames W/ Steel TFC Covers Or Steel TFC Grates Are Designed For AASHTO H-20 Wheel Loading, But Are Not Intended For Direct Traffic Installations.
2. Steel Frames W/ Steel Parkway Covers Or Steel Parkway Grates, Are Designed For A Live Load Of 300 p.s.f.
3. Cast Iron Traffic Grates Are Designed For AASHTO H-10 Wheel Loading, But Are Not Intended For Direct Traffic Installations
4. Cast Iron Parkway Grates Are Designed For 300 p.s.f Wheel Loading.

CB1212 SERIES
12" X 12" CATCH BASIN

3A 12" x 12" CATCH BASIN DETAIL
NOT TO SCALE

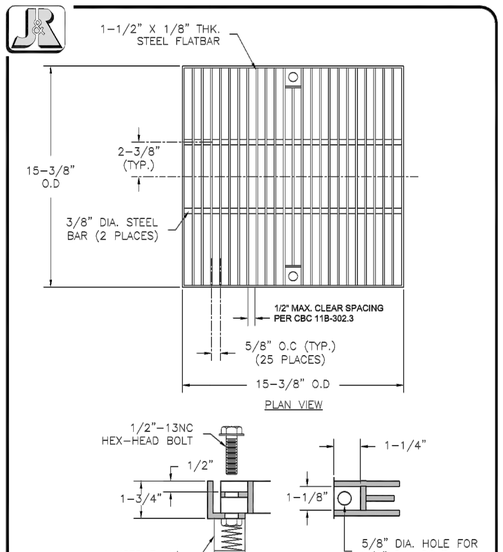

12" X 12" STEEL PARKWAY GRATE per ADA SPECIFICATIONS

1. All steel shall conform to ASTM A36.
2. Grate conforms to ADA requirements.
3. Galvanizing is available upon request.
4. Structures are designed for 300p.s.f Pedestrian Loading.

3A 12" ADA PARKWAY GRATE DETAIL
INSTALL IN SOFTSCAPE AREAS

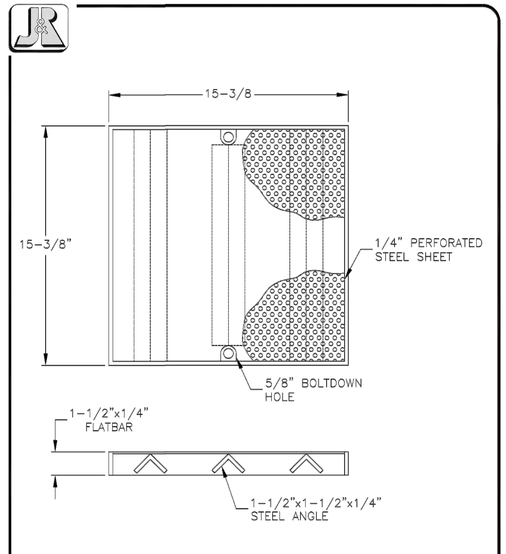

12" X 12" STEEL HEEL-PROOF TRAFFIC GRATE

NOTES
1. Steel Traffic Frames W/ Steel TFC Covers Or Steel TFC Grates Are Designed For AASHTO H-20 Wheel Loading, But Are Not Intended For Direct Traffic Installations.

3A 12" HEEL-PROOF TRAFFIC GRATE DETAIL
INSTALL IN HARDSCAPE AREAS

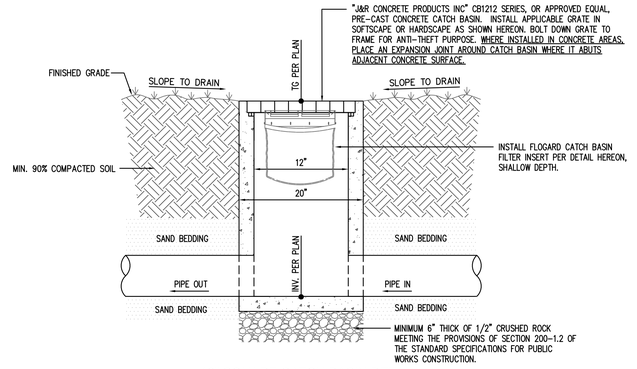

3A 12" SQUARE CATCH BASIN DETAIL

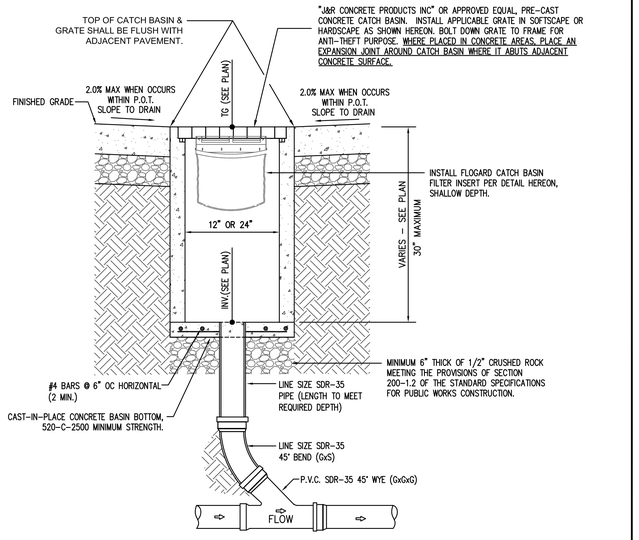

3A 3B 3C CATCH BASIN DETAIL
DEPTH GREATER THAN 2'-6"
NOT TO SCALE

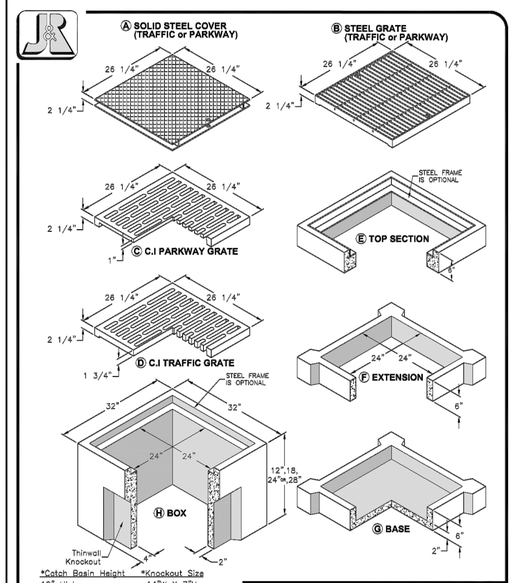

*Catch Basin Height — *Knockout Size

12" High	14"W X 7"H
18" High	14"W X 11"H
24" High	14"W X 17"H
28" High	14"W X 22"H

NOTES
1. Steel Traffic Frames W/ Steel TFC Covers Or Steel TFC Grates Are Designed For AASHTO H-20 Wheel Loading, But Are Not Intended For Direct Traffic Installations.
2. Steel Frames W/ Steel Parkway Covers Or Steel Parkway Grates, Are Designed For A Live Load Of 300 p.s.f.
3. Cast Iron Traffic Grates Are Designed For AASHTO H-10 Wheel Loading, But Are Not Intended For Direct Traffic Installations
4. Cast Iron Parkway Grates Are Designed For 300 p.s.f Wheel Loading.

CB2424 SERIES
24" X 24" CATCH BASIN

3B 24" x 24" CATCH BASIN DETAIL
NOT TO SCALE

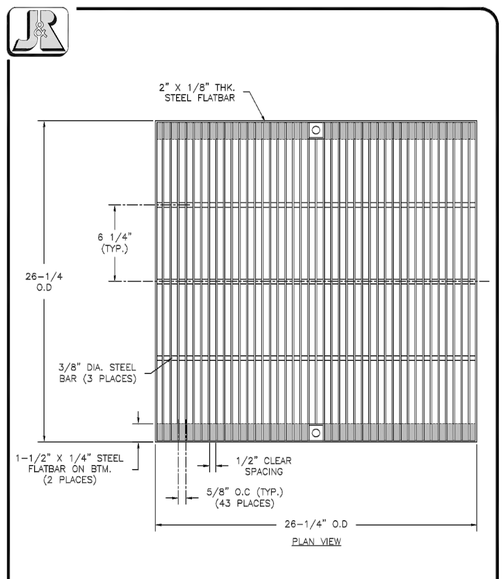

24" X 24" STEEL PARKWAY GRATE per ADA SPECIFICATIONS

1. All steel shall conform to ASTM A36.
2. Grate conforms to ADA requirements.
3. Galvanizing is available upon request.
4. Structures are designed for 300p.s.f Pedestrian Loading.

3B 24" ADA PARKWAY GRATE DETAIL

FGP-0001

U.S. PATENT # 6,00,023 & 6,877,029

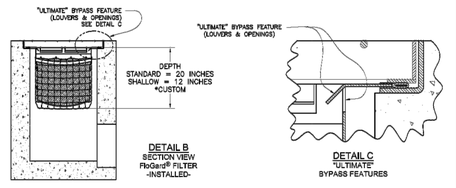

* MANY OTHER STANDARD & CUSTOM SIZES & DEPTHS AVAILABLE UPON REQUEST.

SPECIFIER CHART

MODEL NO. STANDARD DEPTH	STANDARD & SHALLOW DEPTH (Units in these columns is the same for both STANDARD & SHALLOW versions)			STANDARD DEPTH -20 inches-		MODEL NO. SHALLOW DEPTH	SHALLOW DEPTH -12 inches-	
	INLET ID Inside Dimension (inch x inch)	GRATE OD Outside Dimension (inch x inch)	TOTAL BYPASS CAPACITY (cu. ft. / sec.)	SOLIDS STORAGE CAPACITY (cu. ft.)	FILTERED FLOW (cu. ft. / sec.)		SOLIDS STORAGE CAPACITY (cu. ft.)	FILTERED FLOW (cu. ft. / sec.)
FGP-12F	12 X 12	12 X 14	2.8	0.3	0.4	FGP-12F8	.15	.25
FGP-16F	16 X 16	16 X 19	4.7	0.8	0.7	FGP-16F8	.45	.4
FGP-18F	18 X 18	18 X 20	4.7	0.8	0.7	FGP-18F8	.45	.4
FGP-1824F	18 X 22	18 X 24	5.0	1.5	1.2	FGP-1824F8	.85	.7
FGP-1836F	18 X 36	18 X 40	6.9	2.3	1.5	FGP-1836F8	1.3	.9
FGP-2024F	18 X 22	20 X 24	5.9	1.2	1.0	FGP-2024F8	.7	.55
FGP-21F	22 X 22	22 X 24	6.1	2.2	1.5	FGP-21F8	1.25	.85
FGP-24F	24 X 24	24 X 27	6.1	2.2	1.5	FGP-24F8	1.25	.85
FGP-2430F	24 X 30	26 X 30	7.2	2.8	1.8	FGP-2430F8	1.6	1.05
FGP-2436F	24 X 36	24 X 40	8.0	3.4	2.0	FGP-2436F8	1.95	1.15
FGP-2448F	24 X 48	26 X 48	9.3	4.4	2.4	FGP-2448F8	2.5	1.35
FGP-28F	28 X 28	32 X 32	6.3	2.2	1.5	FGP-28F8	1.25	.85
FGP-30F	30 X 30	30 X 34	8.1	3.8	2.0	FGP-30F8	2.05	1.15
FGP-36F	36 X 36	36 X 40	9.1	4.6	2.4	FGP-36F8	2.55	1.35
FGP-3648F	36 X 48	40 X 48	11.5	6.8	3.2	FGP-3648F8	3.9	1.85
FGP-48F	48 X 48	48 X 54	13.2	9.5	3.9	FGP-48F8	5.45	2.25
FGP-SD24F	24 X 24	28 X 28	6.1	2.2	1.5	FGP-SD24F8	1.25	.85

Inlet Filtration

FloGard®
Catch Basin Insert Filter
Grated Inlet Style

Oldcastle® Stormwater Solutions
7821 Southpark Plaza, Suite 200 | Littleton, CO | 80120 | Ph: 800.579.8819 | oldcastlestormwater.com

THIS DOCUMENT & THE PROPERTY OF OLDCASTLE STORMCEPT, INC. IT IS SUBMITTED FOR REFERENCE & APPROVED ONLY. ARE SHALL NOT BE USED IN ANY WAY THAT MAY CONTRAVENE THE INTERESTS OF SAID COMPANY. COPYRIGHT © OLDCASTLE STORMCEPT, INC. ALL RIGHTS RESERVED.

DRAWING NO.	REV.	ECO	DATE
FGP-0001	G	ECO-0142 JPR 7/13/16	JPR 11/3/06

SHEET 2 OF 2

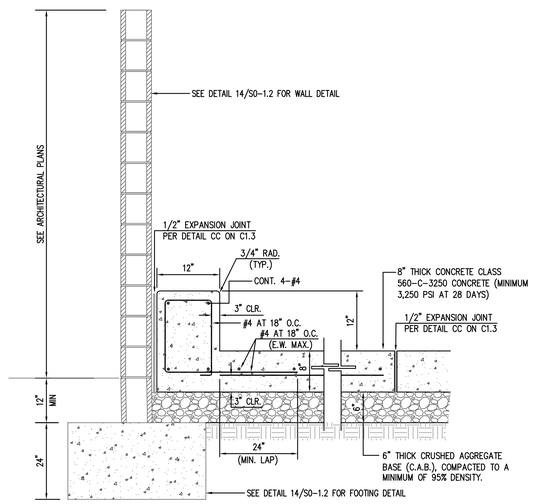

10 TRASH SLAB CURB DETAIL
NOT TO SCALE

IDENTIFICATION STAMP
DIV. OF THE STATE ARCHITECT
APP. 03-119458 INC:
REVIEWED FOR
SS ☑ FLS ☑ ACS ☑
DATE:05/23/2019

DIVISION OF STATE ARCHITECT
355 South Grand Avenue, Suite 2100
Los Angeles, California. 90012
ph: (213) 897-3995 Fax: (213) 897-3159
agency

tBP architecture planning interiors
tBP/Architecture
4611 Teller Avenue
Newport Beach, CA 92660
ph: 949.673.0300 fx: 949.732.3695
architect

FPL and Associates, Inc.
Traffic • Transportation • Civil
30 Corporate Park, Suite 401
Irvine, CA 92606
(949) 252-1688

REGISTERED PROFESSIONAL ENGINEER ALAN WING-CHI LEE No. C 34971 Exp. 09-30-19 CIVIL STATE OF CALIFORNIA

ALAN WING-CHI LEE — R.C.E. 34971 EXP. 09-30-19
consultant

COMPTON COLLEGE
INSTRUCTIONAL BUILDING No. 2

COMPTON COMMUNITY COLLEGE DISTRICT
1111 E. ARTESIA BLVD. COMPTON, CA.

owner

tBP project number : 20998.00
file name:
drawn by: checked by:
date: 04/08/2019

Rev: date: description:

THIS DRAWING AND THE DESIGNS, DEPICTIONS, IDEAS AND OTHER INFORMATION CONTAINED HEREIN CONSTITUTE UNPUBLISHED WORK OF tBP/ARCHITECTURE AND SHALL REMAIN THE PROPERTY OF tBP/ARCHITECTURE IN PERPETUITY. NO PART THEREOF SHALL BE REPRODUCED, DISCLOSED, DISTRIBUTED, SOLD, PUBLISHED OR OTHERWISE USED IN ANY WAY WITHOUT THE ADVANCED EXPRESS WRITTEN CONSENT OF tBP/ARCHITECTURE.

drawing title:
GRADING DETAILS

drawing no.:
C1.4
drawing of

Plot Date: 4/6/2019 12:32:52 PM Last Save By: ron.conedy Login: Ron Conedy S:\Jobs\2757 - TBP Architects\2757x - Compton CCD Instruction Building 2\Civil\Instructional Building 2 - C1.4 Grading Details.dwg

IB2 F.F.=62.40

(E)INSTRUCTIONAL BUILDING #1

05/09/2018 FLOW TEST DATA:
70 PSI STATIC / 49 PSI RESIDUAL
PRESSURE TAKEN AT FIRE HYDRANT.
FLOW AT 20 PSI = 1,654 GPM

CHILD DEVELOPMENT CENTER

F.F.=62.50

INSTRUCTIONAL BUILDING #2

BUILDING 'D'

MODULAR BUILDING

BUILDING 'Q'

BUILDING 'C'

BLDG. 'C'

BUILDING 'B'

CHILD DEVELOPMENT INFANT CARE CENTER

CHILD DEVELOPMENT CENTER

BUILDING 'R'

BUILDING 'Q'

MATCH LINE SEE BELOW LEFT

SEE ABOVE MATCH LINE

SCALE: 1" = 20'

SANITARY SEWER CONSTRUCTION NOTES:

- (S1) PROTECT EXISTING SEWER IMPROVEMENT IN PLACE.
- (S2) CONNECT NEW SEWER PIPE TO EXISTING 4" SEWER PIPE WITH FERNCO RUBBER COUPLING OR EQUAL.
- (S3) CONSTRUCT SEWER CLEAN OUT & YARD BOX PER DETAIL S3 ON SHEET C1.6.
- (S4) CONNECT TO BUILDING PER PLUMBING PLAN.
- (S5) CONSTRUCT 4" SDR-35 P.V.C. PIPE AND FITTINGS. CONSTRUCT PER APPLICABLE TRENCHING DETAIL ON SHEET C1.3.
- (S6) REMOVE EXISTING SEWER LINE DURING OVEREXCAVATION.

FIRE WATER CONSTRUCTION NOTES:

1. RELOCATE EXISTING FIRE HYDRANT PER DETAIL 1 ON C1.7.
2. CONSTRUCT CONCRETE THRUST BLOCK PER DETAIL W7 ON C1.6.
3. CONSTRUCT EBBA IRON MECHANICAL JOINT RESTRAINT AT ALL FITTINGS & PUSH ON PIPE JOINTS AS ALLOWED BY N.F.P.A. 24, SECTION 10.6.2 & A.10.6.2.
4. CONSTRUCT 6" A.W.W.A. C900, CLASS 235, P.V.C. PIPE. CONSTRUCT PER APPLICABLE TRENCHING DETAIL ON C1.3. CONSTRUCT WATER MAIN VERTICAL OFFSET PER DETAIL 4 ON C1.6 WHERE UTILITY CONFLICTS ARE IDENTIFIED DURING CONSTRUCTION.
5. CONSTRUCT EPOXY COATED 6" SHUT-OFF VALVE IN YARDBOX PER DETAIL W4 ON C1.6.
6. CONNECT TO EXISTING 6" WATER LINE PER DETAIL 6 ON C1.7.
7. INSTALL TWO-WAY BLUE REFLECTIVE MARKER WITH APPROVED EPOXY.
- (8A) CONSTRUCT DRY FIRE DEPARTMENT CONNECTION PER DETAIL 8 ON C1.6.
- (8B) CONSTRUCT WET FIRE DEPARTMENT CONNECTION PER DETAIL 8 ON C1.6.
9. CONSTRUCT FIRE HYDRANT BARRICADE PER DETAIL 9 ON C1.6.
10. HOT TAP EXISTING 10" WATER LINE WITH EPOXY COATED M.J. SLEEVE. CONTRACTOR SHALL POTHOLE AND ASCERTAIN THE EXACT SIZE OF THE EXISTING PIPING PRIOR TO ORDERING THE TAPPING SLEEVE.
11. SEE FIRE PROTECTION PLANS FOR CONTINUATION.
12. REMOVE EXISTING 6" FIRE WATER LINE.
13. PROTECT EXISTING 6" FIRE WATER LINE IN PLACE.
14. CONSTRUCT EPOXY COATED 6" SHUT-OFF VALVE IN YARDBOX PER DETAIL W4 ON C1.6 & CONNECT TO END OF CUT 6" WATER LINE FOR FUTURE USE OF WATER LINE. CLOSE VALVE.
15. REMOVE EXISTING FIRE HYDRANT AND RETURN TO OWNER.

LEGEND:

- = NEW DECOMPOSED GRANITE (PER LANDSCAPE)
- = NEW CONCRETE
- = NEW IB2 BUILDING OUTLINE
- = (E)BUILDING (TO REMAIN)

SD	SD	STORM DRAIN
W	W	DOMESTIC WATER
FW	FW	FIRE WATER
SS	SS	SANITARY SEWER
G	G	GAS
E	E	ELECTRICAL/POWER
C	C	COMMUNICATIONS
CHW	CHW	CHILLED/HOT WATER

1'-6" DEPTH FROM SURFACE

DEPTH OF (E)UTILITY ARE APPROXIMATE AND PROVIDED FROM THE UNDERGROUND UTILITY MAPPING SURVEY. ESTIMATED DEPTHS ARE FROM THE GROUND SURFACE TO THE CENTER OF THE FACILITY, INVERT OF WASTE LINES, OR TO THE FACILITY TRACER WIRE. DEPTH ESTIMATES SHOULD BE USED WITH CAUTION AND MAY VARY ALONG THE LENGTH OF THE FACILITY.

POTABLE WATER CONSTRUCTION NOTES:

- (W1) PROTECT EXISTING WATER IMPROVEMENT IN PLACE.
- (W2) REMOVE EXISTING WATER LINE DURING OVEREXCAVATION.
- (W3) CONNECT TO EXISTING 4" WATER LINE WITH APPLICABLE COUPLINGS AND FITTINGS.
- (W4) CONSTRUCT EPOXY COATED 2.5" SHUT-OFF VALVE IN YARDBOX PER DETAIL W4 ON C1.6.
- (W5) CONSTRUCT 2.5" SCH. 80 P.V.C. PIPE, FITTINGS, AND COUPLINGS. CONSTRUCT PER APPLICABLE TRENCHING DETAIL ON SHEET CO04.
- (W6) CONSTRUCT 4" SCH. 80 P.V.C. PIPE, FITTINGS, AND COUPLINGS. CONSTRUCT PER APPLICABLE TRENCHING DETAIL ON SHEET CO04.
- (W7) CONSTRUCT CONCRETE THRUST BLOCK PER DETAIL W7 ON C1.6.

NOTE TO CONTRACTOR: BEFORE TRENCHING OCCURS, THE CONTRACTOR SHALL COMPLETE AN UNDERGROUND UTILITY MAPPING SURVEY ALONG THE PROPOSED TRENCHING ROUTE TO DETERMINE WERE EXISTING UTILITIES ARE AND WHERE POSSIBLE UNDERGROUND CONFLICTS MAY OCCUR.

CORROSION PROTECTION NOTE: PER PROJECT SPECIFICATION 33 10 00, ALL DUCTILE IRON PIPE AND FITTINGS BURIED UNDERGROUND SHALL BE PROTECTED WITH DOUBLE WRAPPED PLASTIC FILM IN ACCORDANCE WITH AWWA C105 "AMERICAN NATIONAL STANDARD FOR POLYETHYLENE ENCASEMENT FOR DUCTILE-IRON PIPE SYSTEMS". EACH WRAP SHALL BE A MINIMUM THICKNESS OF 8-MIL. GATE VALVES AND MECHANICAL RESTRAINT DEVICES SHALL BE WRAPPED WITH 3 LAYERS OF 8-MIL POLYETHYLENE.

IDENTIFICATION STAMP
DIV. OF THE STATE ARCHITECT
APP. 03-119458 INC:
REVIEWED FOR
SS ☑ FLS ☑ ACS ☑
DATE:05/23/2019

DIVISION OF STATE ARCHITECT
355 South Grand Avenue, Suite 2100
Los Angeles, California. 90012
ph: (213) 897-3995 Fax: (213) 897-3159
agency

tBP
architecture
planning
interiors

tBP/Architecture
4611 Teller Avenue
Newport Beach, CA 92660
ph: 949.673.0300 fx: 949.732.3895
architect

FPL and Associates, Inc.
Traffic • Transportation • Civil
30 Corporate Park, Suite 401
Irvine, CA 92606
(949) 252-1688

REGISTERED PROFESSIONAL ENGINEER ALAN WING-CHI LEE No. C 34971 Exp. 09-30-19 CIVIL STATE OF CALIFORNIA

ALAN WING-CHI LEE R.C.E. 34971 EXP. 09-30-19
consultant

COMPTON COLLEGE
INSTRUCTIONAL BUILDING No. 2

COMPTON COMMUNITY COLLEGE DISTRICT
1111 E. ARTESIA BLVD. COMPTON, CA.

owner

tBP project number : 20998.00
file name:
drawn by: checked by:
date: 04/08/2019

Rev:	date:	description:

THIS DRAWING AND THE DESIGNS, DEPICTIONS, IDEAS AND OTHER INFORMATION CONTAINED HEREIN CONSTITUTE UNPUBLISHED WORK OF tBP/ARCHITECTURE AND SHALL REMAIN THE PROPERTY OF tBP/ARCHITECTURE IN PERPETUITY. NO PART THEREOF SHALL BE REPRODUCED, DISCLOSED, DISTRIBUTED, SOLD, PUBLISHED OR OTHERWISE USED IN ANY WAY WITHOUT THE ADVANCED EXPRESS WRITTEN CONSENT OF tBP/ARCHITECTURE.

drawing title:

UTILITY PLAN

drawing no.:

C1.5

drawing of

Plot Date: 4/9/2019 1:41:38 PM Last Save By: ron.carvely Login: Ron Carvely S:\Jobs\2757 - tBP Architects\2757.w - Compton CCD Instruction Building 2\Civil\Instructional Building 2 - C1.5 Utility Plan.dwg

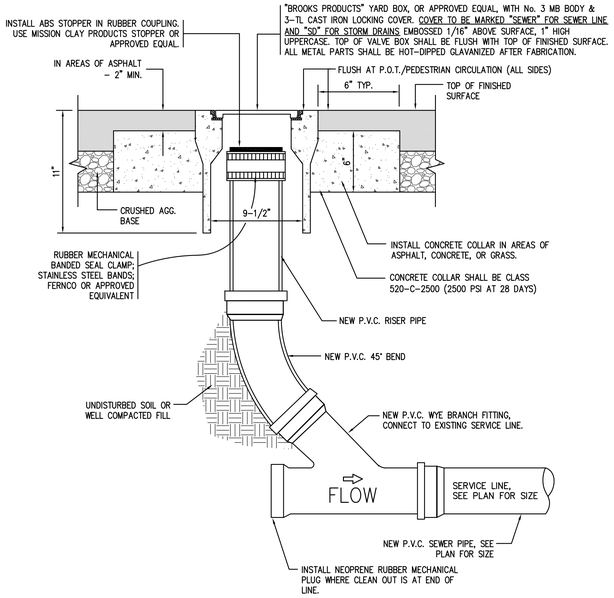

S3 CLEAN OUT & VALVE BOX DETAIL
NOT TO SCALE

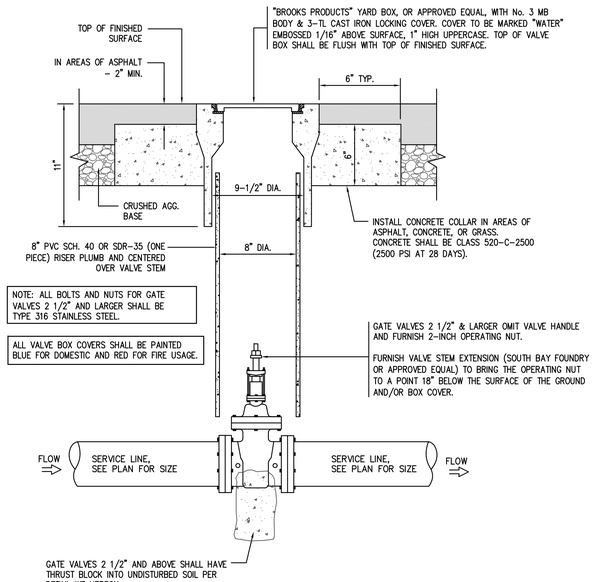

W4 SHUT-OFF VALVE IN YARDBOX 2-1/2" AND ABOVE
NOT TO SCALE

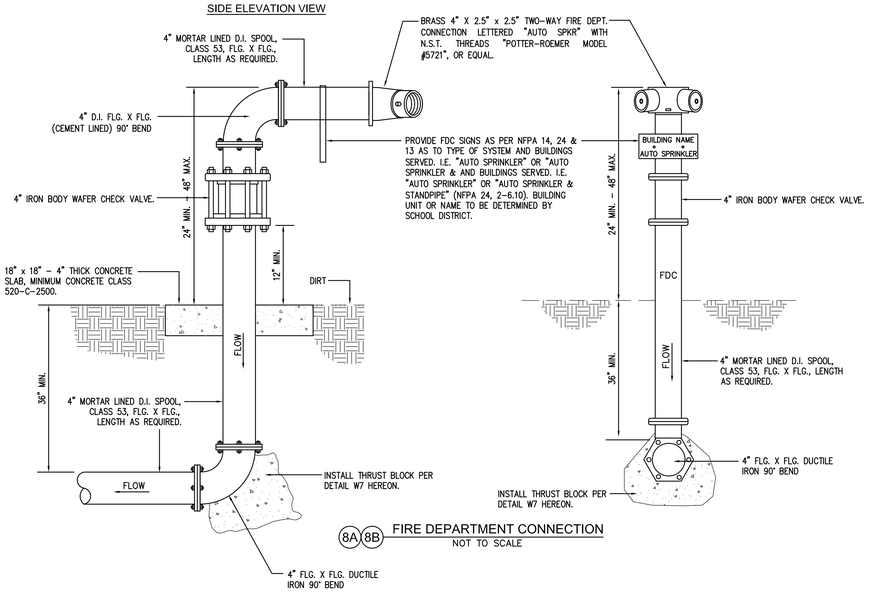

8A 8B FIRE DEPARTMENT CONNECTION
NOT TO SCALE

F.D.C. GENERAL NOTES:

1. ALL DUCTILE IRON FITTINGS BURIED UNDERGROUND SHALL BE PROTECTED WITH PLASTIC FILM WRAP IN ACCORDANCE WITH AWWA C105. WRAP SHALL BE A LOOSE 8'-MIL-THICK POLYETHYLENE TUBE. ALL JOINTS BETWEEN PLASTIC TUBES SHALL BE WRAPPED WITH 2-INCH-WIDE POLYETHYLENE ADHESIVE TAPE, POLYKEN 900, SCOTCH WRAP 50, OR APPROVED EQUAL.
2. ALL BOLTS AND STUDS SHALL BE TYPE 316 STAINLESS STELL PER ASTM A193 GRADE B8M. NUTS AND WASHERS SHALL BE TYPE 316 STAINLESS STEEL PER ASTM A194 GRADE 8M.
3. CONCRETE POURED AGAINST PIPE FITTINGS SHALL BE PLACED SO THAT VALVES AND FITTINGS ARE ACCESSIBLE FOR REPAIR.
4. ALL EXPOSED FLANGES AND OTHER METAL SURFACES AND ALL DAMAGED COATINGS SHALL BE COATED AFTER ASSEMBLY WITH A MASTIC, PER SPECIFICATIONS.
5. THE COMPLETED ABOVE GROUND F.D.C. SHALL BE PAINTED OSHA SAFETY RED.

FIRE DEPT. CONNECTION SIGNAGE NOTES

1. ALL SIGNS MUST STATE THE ADDRESS OF THE BUILDING BEING SERVED.
2. THE SIGN SHALL BE METAL, PAINTED WHITE WITH ENGRAVED RED LETTERS 1" HIGH.
3. THE SIGN SHALL INDICATE ONLY ADDRESS OR ZONE AND WHAT IT SERVES, I.E. SPRINKLERS, ON SITE HYDRANTS, ETC.
4. SIGNS SHALL BE A MINIMUM OF FOUR INCHES HIGH BY EIGHT INCHES WIDE.
5. SIGNS SHALL BE PERMANENTLY BANDED TO THE VALVE WITH U-BOLTS.

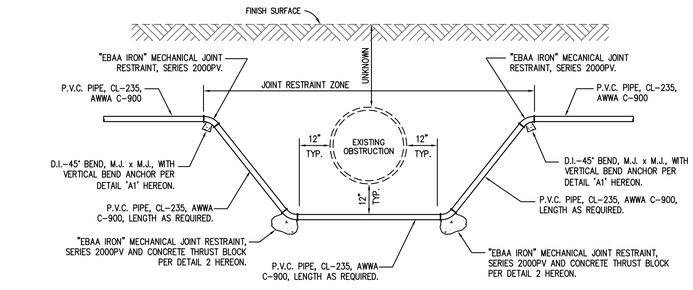

CONSTRUCT WHERE CONDITIONS REQUIRE WATER MAIN VERTICAL OFFSET DUE TO EXISTING OBSTRUCTION
DOES NOT APPLY TO SEWER - WATER SHALL ALWAYS CROSS SEWER OVER TOP

4 WATER MAIN VERTICAL OFFSET
NOT TO SCALE

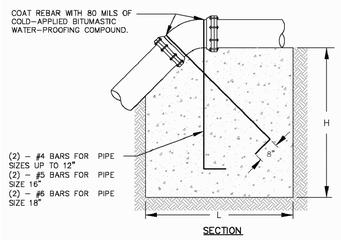

VERTICAL BEND ANCHOR

VERTICAL BEND ANCHOR						
PIPE SIZE	22 1/2° BEND L,H, AND W(IN)	VOLUME (YD³)	THRUST (LBS)	45° BEND L,H, AND W(IN)	VOLUME (YD³)	THRUST (LBS)
4"	26	0.4	1104	32	0.7	2165
6"	34	0.8	2483	42	1.6	4871
8"	41	1.5	4414	51	2.8	8659
10"	47	2.2	6897	59	4.4	13529
12"	53	3.2	9932	67	6.4	19482
16"	64	5.6	17657	81	11.4	34635
18"	70	7.4	22347	87	14.1	43835

A1 VERTICAL BEND ANCHOR DETAIL
NOT TO SCALE

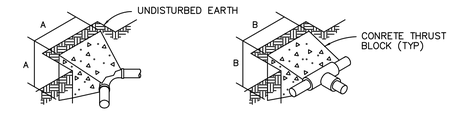

THRUST BLOCK AT 90° ELBOW

THRUST BLOCK AT TEE

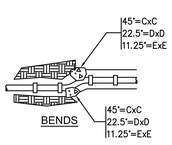

BENDS

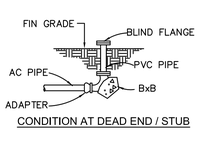

CONDITION AT DEAD END / STUB

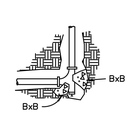

PLUGGED TEE

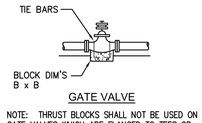

GATE VALVE

NOTE: THRUST BLOCKS SHALL NOT BE USED ON GATE VALVES WHICH ARE FLANGED TO TEES OR CROSSES WHICH HAVE THRUST BLOCKS.

PIPE SIZE (INCHES)	90° ELBOW	TEE / STUB	45° BEND	22.5° BEND	11.25° BEND
	A	B	C	D	E
2	12"	10"	9"	7"	5"
3	18"	15"	13"	10"	7"
4	24"	20"	18"	13"	9"
6	34"	29"	25"	18"	13"
8	45"	38"	33"	24"	17"
10	55"	46"	40"	29"	21"
12	65"	55"	48"	34"	24"

W7 CONCRETE THRUST BLOCK DETAILS
NOT TO SCALE

GENERAL NOTES:

1. ALL DUCTILE IRON FITTINGS BURIED UNDERGROUND SHALL BE PROTECTED WITH PLASTIC FILM WRAP IN ACCORDANCE WITH AWWA C105. WRAP SHALL BE A LOOSE 8'-MIL-THICK POLYETHYLENE TUBE. ALL JOINTS BETWEEN PLASTIC TUBES SHALL BE WRAPPED WITH 2-INCH-WIDE POLYETHYLENE ADHESIVE TAPE, POLYKEN 900, SCOTCH WRAP 50, OR APPROVED EQUAL.
2. THRUST BLOCK AREAS ARE BASED ON 200 PSI PRESSURE AND 2,000 PSF ALLOWABLE SOIL BEARING PRESSURE & SIZED PER N.F.P.A. 24, TABLE A.10.6.1(a), 2016 EDITION. SOIL BEARING PRESSURE OF 2,000 ALLOWABLE PER SOILS REPORT.
3. ALL BOLTS AND STUDS SHALL BE TYPE 316 STAINLESS STEEL PER ASTM A193 GRADE B8M. NUTS AND WASHERS SHALL BE TYPE 316 STAINLESS STEEL PER ASTM A194 GRADE 8M.
4. THRUST BLOCKS SHALL BE INSTALLED AT EVERY CHANGE OF DIRECTION.
5. ALL THRUST BLOCKS SHOULD, WHERE POSSIBLE, BE PLACED AGAINST UNDISTURBED SOIL. WHERE IT IS NOT POSSIBLE TO PLACE THE BEARING SURFACE AGAINST UNDISTURBED SOIL, THE FILL BETWEEN THE BEARING SURFACE AND UNDISTURBED SOIL MUST BE COMPACTED TO AT LEAST 90% STANDARD PROCTOR DENSITY (PER N.F.P.A. 24, SECTION A.10.6.1). THEY SHALL BE CENTERED VERTICALLY AND HORIZONTALLY ABOUT THE DIRECTION OF THE THRUST.
6. THRUST BLOCKS SHALL BE CONCRETE CLASS 520-C-2500 PER THE STANDARD SPECIFICATIONS FOR PUBLIC WORKS CONSTRUCTION, 2015 EDITION, SECTION 201-1 WITH TYPE II CEMENT.
7. WHERE WATER MAIN DEAD ENDS ARE BLIND FLANGED OR CAPPED, THE THRUST BLOCK SHALL EXTEND A MINIMUM DISTANCE OF 6" INTO BOTH SIDES OF THE TRENCH.
8. CONCRETE POURED AGAINST PIPE FITTINGS SHALL BE PLACED SO THAT VALVES AND FITTINGS ARE ACCESSIBLE FOR REPAIR.
9. TIE BARS SHALL BE #4 REBAR (PER ASTM 767 AND D3963) OR STAINLESS STEEL WITH ACI HOOKED ENDS. WHEN TIE BARS ARE NOT EMBEDDED IN CONCRETE THEY SHALL BE COATED WITH KOPPERS CO. BITUMASTIC NO. 50 OR EQUIVALENT.
10. ALL EXPOSED FLANGES AND OTHER METAL SURFACES AND ALL DAMAGED COATINGS SHALL BE COATED AFTER ASSEMBLY WITH A MASTIC, PER SPECIFICATIONS.
11. CONCRETE SHALL HAVE 3" MINIMUM CLEARANCE AROUND ALL JOINTS.

REV 04/03

COUNTY OF LOS ANGELES FIRE DEPARTMENT
FIRE PREVENTION DIVISION

STANDARD FIRE HYDRANT BARRICADE

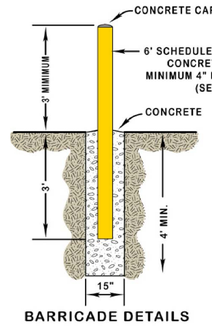

BARRICADE DETAILS

Figure 1

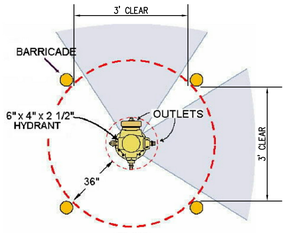

PLAN
FIRE HYDRANT BARRICADES (TYPICAL)

Figure 2

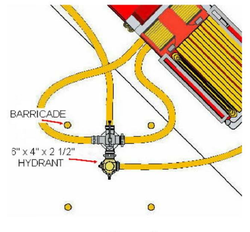

Figure 3

Notes:

1. Figure 1: 6 inch diameter pipe if heavy truck traffic is anticipated. Schedule 40 steel and concrete filled.
2. Posts, fences, vehicles, growth, trash storage and other materials or things shall not be placed or kept near fire hydrants in a manner than would prevent fire hydrants from being immediately discernable.
3. If hydrant to be barricaded; no barricade shall be constructed in front of hydrant outlets. (Figure 2, shaded area)
4. The exact location of barricades may be changed by the Fire Inspector in the field.
5. The steel pipe above ground shall be painted a minimum of two field coats of primer.
6. Two finish coats of "Traffic Signal Yellow" shall be used for Fire Hydrant Barricades.
7. Figure 3 shows hydrant hook up during fire ground operations. Notice apparatus (Hydra-Assist Value) connected to hydrant and the required area. Figure 3 shows the importance of not constructing Barricades or other obstructions in front of hydrant outlets.

9 FIRE HYDRANT BARRICADE DETAIL
NOT TO SCALE

IDENTIFICATION STAMP
DIV. OF THE STATE ARCHITECT
APP. 03-119458 INC:
REVIEWED FOR
SS ☑ FLS ☑ ACS ☑
DATE:05/23/2019

DIVISION OF STATE ARCHITECT
355 South Grand Avenue, Suite 2100
Los Angeles, California. 90012
ph: (213) 897-3995 Fax: (213) 897-3159
agency

tBP
architecture
planning
interiors
tBP/Architecture
4611 Teller Avenue
Newport Beach, CA 92660
ph: 949.673.0300 fx: 949.732.3695
architect

FPL and Associates, Inc.
Traffic • Transportation • Civil
30 Corporate Park, Suite 401
Irvine, CA 92606
(949) 252-1688

REGISTERED PROFESSIONAL ENGINEER ALAN WING-CHI LEE No. C 34971 Exp. 09-30-19 CIVIL STATE OF CALIFORNIA

ALAN WING-CHI LEE R.C.E. 34971 EXP. 09-30-19

consultant

COMPTON COLLEGE
INSTRUCTIONAL BUILDING No. 2
COMPTON COMMUNITY COLLEGE DISTRICT
1111 E. ARTESIA BLVD. COMPTON, CA.

owner

tBP project number : 20998.00
file name:
drawn by: checked by:
date: 04/08/2019

Rev:	date:	description:

THIS DRAWING AND THE DESIGNS, DEPICTIONS, IDEAS AND OTHER INFORMATION CONTAINED HEREIN CONSTITUTE UNPUBLISHED WORK OF tBP/ARCHITECTURE AND SHALL REMAIN THE PROPERTY OF tBP/ARCHITECTURE IN PERPETUITY. NO PART THEREOF SHALL BE REPRODUCED, DISCLOSED, DISTRIBUTED, SOLD, PUBLISHED OR OTHERWISE USED IN ANY WAY WITHOUT THE ADVANCED EXPRESS WRITTEN CONSENT OF tBP/ARCHITECTURE.

drawing title:

UTILITY DETAILS

drawing no.:

C1.6

drawing of

Plot Date: 4/6/2019 12:33:48 PM Last Save By: ron.conedy Login: Ron Conedy S:\Jobs\2757 - TBP Architects\2757w - Compton CCD Instruction Building 2\Civil\Instructional Building 2 - C1.6 Utility Details.dwg

FIRE HYDRANT GENERAL NOTES:

1. FIRE HYDRANT SUPPLY PIPING SHALL BE A MINIMUM OF SIX INCHES IN DIAMETER. THE LOWEST OPERATING NUT SHALL BE A MINIMUM OF 18" ABOVE GRADE AND THE HYDRANT FLANGE SHALL BE A MINIMUM OF 2" ABOVE GRADE.
2. UNDERGROUND SHUT-OFF VALVES ARE TO BE LOCATED A MINIMUM DISTANCE OF 6 FEET FROM HYDRANT.
3. ALL OUTLETS SHALL BE PROVIDED WITH NATIONAL STANDARD THREADS (NTS).
4. BREAK-AWAY FEATURES OTHER THAN BOLTS WILL NOT BE ACCEPTED.
5. ALL UNDERGROUND BOLTS TO BE COATED WITH KOPPERS BITUMASTIC #50 OR EQUAL.
6. IN SOFTSCAPE AREAS, INSTALL 6" THICK BY 2' X 2' CONCRETE COLLAR.

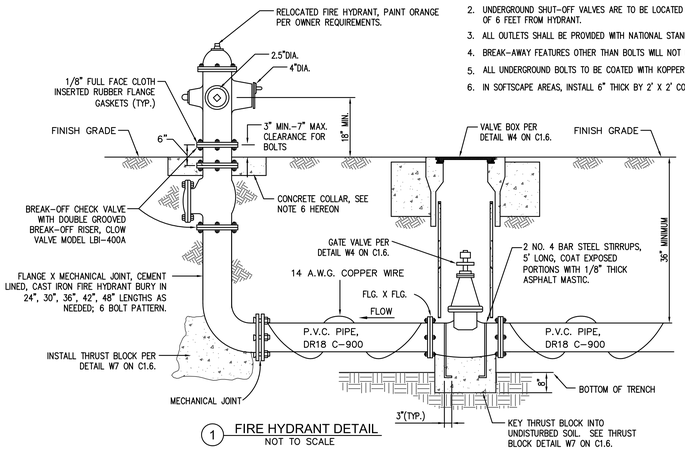

1 FIRE HYDRANT DETAIL
NOT TO SCALE

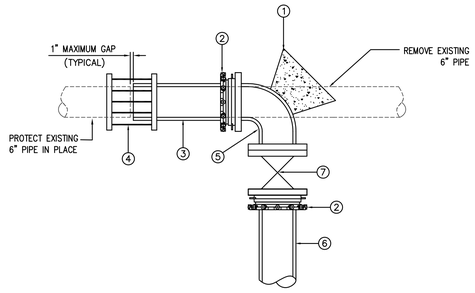

6 CUT-IN DETAIL
NOT TO SCALE

CUT-IN TEE CONSTRUCTION NOTES:

* ALL BOLTS SHALL BE STAINLESS STEEL TYPE 316.

(1) CONSTRUCT CONCRETE THRUST BLOCK PER DETAIL W7 ON C1.6.
(2) INSTALL "EBAA IRON" 6" RESTRAINED FLANGE ADAPTER, SERIES 2106.
(3) INSTALL 6" P.V.C. PRESSURE PIPE, A.W.W.A. C900, DR 14, MINIMUM LENGTH 18"
(4) INSTALL 6" "SMITH-BLAIR" MODEL 411 STEEL COUPLING WITH 10" SLEEVE, OR EQUAL.
(5) INSTALL 6" X 6" D.I. 90° BEND, FLG'D.
(6) INSTALL 6" AWWA C-900, DR 18, PVC PIPE.
(7) INSTALL 6" EPOXY COATED GATE VALVE PER DETAIL W4 ON C1.6.

NOTE: MECHANICAL RESTRAINT DEVICES & COUPLINGS SHALL BE WRAPPED WITH 3 LAYERS OF 8-MIL POLYETHLYENE AFTER ASSEMBLY.

NOTES FOR UNDERGROUND PIPING FOR PRIVATE HYDRANTS & SPRINKLERS

1. PRIOR TO INSTALLATION, ALL PLANS AND SPECIFICATIONS SHALL BE APPROVED BY D.S.A. REFER TO DSA IR A-25 FOR DESIGN, INSTALLATION AND MAINTENANCE GENERAL REQUIREMENTS.
2. INSPECTIONS ARE REQUIRED: 1) PRIOR TO POURING THRUST BLOCKS, 2) FOR HDYROSTATIC TESTING, AND 3) FOR FLUSH.
3. INSTALLATION, INSPECTION, AND TESTING SHALL CONFORM TO 2016 EDITIONS CFC, NFPA 13 AND NFPA 24.
4. PRIVATE FIRE HYDRANT SHALL BE APPROVED WET BARREL STYLE WITH A MINIMUM OF 2 1/2" AND ONE 4" OUTLET. THE 4" OUTLET SHALL FACE THE FIRE DEPARTMENT ACCESS ROAD. ALL OUTLETS SHALL BE PROVIDED WITH NATIONAL STANDARD THREADS (NST). NFPA 24, 7.1.1.2.
5. FIRE HYDRANT SUPPLY PIPING SHALL BE A MINIMUM OF SIX INCHES IN DIAMETER. THE CENTER OF THE HOSE OUTLET SHALL BE NOT LESS THAN 18" ABOVE FINAL GRADE OR, WHERE LOCATED IN A HOUSE, 12" ABOVE THE FLOOR. NFPA 24, 7.1.1 & 7.3.3.
6. FIRE HYDRANTS SHALL BE A MINIMUM OF 40 FEET FROM ALL STRUCTURES. NFPA 24, 7.2.3.
7. A KEYED GATE VALVE SHALL BE PROVIDED FOR EACH HYDRANT IN AN ACCESSIBLE LOCATION. VALVES SHALL NOT BE LOCATED IN PARKING STALLS. NFPA 24, 7.1.1.1.
8. ALL PIPING SHALL BE LISTED FOR USE IN FIRE PROTECTION SERVICE AND COMPLY WITH AWWA STANDARDS (CLASS 150 MINIMUM) CLASS 200 PIPE SHALL BE USED WHERE THE PRESSURE MAY EXCEED 150 PSI. NFPA 24, 10.1.1 & 5.
9. ALL BOLTED JOINTS SHALL BE CLEANED AND THOROUGHLY COATED WITH ASPHALT OR OTHER CORROSION RETARDING MATERIAL AFTER INSTALLATION. NFPA 24, 10.3.6.2.
10. BACKFILL SHALL BE WELL TAMPED LAYERS TO CONSIST OF 6" MINIMUM BED OF CLEAN FILL SAND OR PEA GRAVEL BELOW AND 12" ABOVE THE PIPE (TOTAL 18" MINIMUM). NFPA 24, 10.9.1.
11. FITTINGS SHALL BE OF AN APPROVED TYPE. NFPA 24, 10.2.1.
12. A MINIMUM OF 30" OF COVER, FROM FINISH GRADE TO THE TOP OF THE PIPE, SHALL BE PROVIDED. WHEN SURFACE LOADS ARE EXPECTED, A MINIMUM OF 36" COVER SHALL PROVIDED. NFPA 24, 10.4.4.
13. THRUST BLOCKS, OR OTHER APPROVED METHOD OF THRUST RESTRAINT, SHALL BE PROVIDED WHEREVER PIPE CHANGES DIRECTION. BACK-FILL BETWEEN THE JOINTS TO PREVENT MOVEMENT OF THE PIPE. PROVIDE DETAILS AND CALCULATIONS FOR SIZING THRUST BLOCKS BASE ON ACTUAL SOIL CONDITIONS. NFPA 24, 10.8.
14. A HYDROSTATIC TEST (200 PSI FOR TWO HOURS OR 50 PSI OVER MAXIMUM STATIC PRESSURE, WHICHEVER IS GREATER) SHALL BE PERFORMED. NFPA 24, 10.10.2.2.1.
15. THE SYSTEM SHALL BE THOROUGHLY FLUSHED BEFORE CONNECTION IS MADE TO OVERHEAD PIPING. FLOW SHALL BE THROUGH A MINIMUM OF 4" HOSE OF PIPE. NFPA 24, 10.10.2.1.
16. ALL CONTROL VALVES SHALL BE LOCKED IN THE OPEN POSITION. VALVES SHALL BE MONITORED IF THEY SERVE 20 OR MORE SPRINKLER HEADS. CBC/CFC 903.4.
17. ALL CONTROL VALVES SHALL BE LISTED INDICATING TYPE UNLESS A NON-INDICATING VALVE, SUCH AS AN UNDERGROUND GATE VALVE WITH APPROVED ROADWAY BOX COMPLETE WITH T-WRENCH, IS ACCEPTABLE TO AUTHORITY HAVING JURISDICTION (AHJ). NFPA 24, 6.1.1.
18. POST INDICATING VALVES (PIV) SHALL BE TESTED TO INSURE THAT THE "TARGETS" (OPEN, CLOSED) ARE CLEARLY IDENTIFIED WHEN VALVE IS OPENED AND CLOSED. NFPA 24, 10.10.1 & 14.1.
19. TEST SHALL BE MADE BY THE INSTALLING CONTRACTOR IN THE PRESENCE OF THE (AHJ). PROVIDE A COMPLETED CONTRACTOR'S MATERIAL AND TEST CERTIFICATE FOR UNDERGROUND PIPING TO DSA. NFPA 24, 10.10.1 & 14.1, CFC 901.5 & 6.

IDENTIFICATION STAMP
DIV. OF THE STATE ARCHITECT
APP. 03-119458 INC:
REVIEWED FOR
SS ☑ FLS ☑ ACS ☑
DATE:05/23/2019

DIVISION OF STATE ARCHITECT
355 South Grand Avenue, Suite 2100
Los Angeles, California. 90012
ph: (213) 897-3995 Fax: (213) 897-3159
agency

tBP architecture planning interiors
tBP/Architecture
4611 Teller Avenue
Newport Beach, CA 92660
ph: 949.673.0300 fx: 949.732.3895
architect

FPL and Associates, Inc.
Traffic • Transportation • Civil
30 Corporate Park, Suite 401
Irvine, CA 92606
(949) 252-1688

REGISTERED PROFESSIONAL ENGINEER ALAN WING-CHI LEE No. C 34971 Exp. 09-30-19 CIVIL STATE OF CALIFORNIA

ALAN WING-CHI LEE — R.C.E. 34971 EXP. 09-30-19
consultant

COMPTON COLLEGE
INSTRUCTIONAL BUILDING No. 2

COMPTON COMMUNITY COLLEGE DISTRICT
1111 E. ARTESIA BLVD. COMPTON, CA.

owner

tBP project number : 20998.00
file name:
drawn by: checked by:
date: 04/08/2019

Rev:	date:	description:

THIS DRAWING AND THE DESIGNS, DEPICTIONS, IDEAS AND OTHER INFORMATION CONTAINED HEREIN CONSTITUTE UNPUBLISHED WORK OF tBP/ARCHITECTURE AND SHALL REMAIN THE PROPERTY OF tBP/ARCHITECTURE IN PERPETUITY. NO PART THEREOF SHALL BE REPRODUCED, DISCLOSED, DISTRIBUTED, SOLD, PUBLISHED OR OTHERWISE USED IN ANY WAY WITHOUT THE ADVANCED EXPRESS WRITTEN CONSENT OF tBP/ARCHITECTURE.

drawing title:
UTILITY DETAILS

drawing no.:
C1.7
drawing of

Plot Date: 4/6/2019 12:34:21 PM Last Save By: ron.canedy Login: Ron Canedy S:\Jobs\2757 - TBP Architects\2757w - Compton CCD Instruction Building 2\Civil\Instructional Building 2 - C1.7 Utility Details.dwg

CONSTRUCTION NOTES:

1. WRITTEN SPECIFICATIONS ARE A PART OF THESE CONSTRUCTION DRAWINGS. DRAWINGS DO NOT CONTAIN ALL INFORMATION NECESSARY FOR CONSTRUCTION.
2. VERIFY LIMITS OF WORK, PROPERTY LINES AND LOTS LINES BEFORE STARTING WORK. CONTRACTOR IS RESPONSIBLE FOR ANY DAMAGE TO OFF-SITE PROPERTY.
3. THE CONTRACTOR SHALL BE RESPONSIBLE FOR THE REVIEW AND COORDINATION OF ALL DRAWINGS AND SPECIFICATIONS PRIOR TO THE START OF CONSTRUCTION. ANY DISCREPANCIES THAT OCCUR SHALL BE BROUGHT TO THE ATTENTION OF THE ARCHITECT, LANDSCAPE ARCHITECT, OR THE ENGINEER, PRIOR TO THE START OF CONSTRUCTION SO THAT A CLARIFICATION CAN BE ISSUED.
4. PRIOR TO BEGINNING OF WORK, VERIFY ALL SITE CONDITIONS INCLUDING UNDERGROUND UTILITIES AND ABOVE GRADE FEATURES SUCH AS GRADING, WALLS, FENCES, LIGHTING, OR OTHER STRUCTURES. CONTRACTOR TO NOTIFY LANDSCAPE ARCHITECT IMMEDIATELY IF ANY ERRORS OR DISCREPANCIES FROM THESE PLANS ARE FOUND, BEFORE PROCEEDING WITH ANY WORK.
5. DO NOT WILLFULLY PROCEED WITH CONSTRUCTION OPERATIONS WHEN IT IS OBVIOUS THAT OBSTRUCTIONS AND/OR GRADE DIFFERENCES EXIST THAT MAY NOT HAVE BEEN APPARENT DURING THE DESIGN PROCESS. BRING THESE CONDITIONS IMMEDIATELY TO THE ATTENTION OF THE LANDSCAPE ARCHITECT FOR RESOLUTION. ASSUME FULL RESPONSIBILITY FOR COSTS INCURRED AND REQUIRED DUE TO LACK OF PROVIDING SUCH NOTIFICATION.
6. THE LOCATION OF ALL SERVICE RUNS, SUCH AS WATER SUPPLY, ELECTRICAL (OVERHEAD AND UNDERGROUND), TELEPHONE, SANITARY SEWER, ETC. SHOULD BE ASCERTAINED BEFORE WORK IS STARTED, WHERE THEY WILL BE AFFECTED BY EXCAVATION OR WHERE MACHINES MAY BE WORKING NEARBY, THEY SHOULD BE CAREFULLY SEALED, PROTECTED OR DIVERTED. NOTIFY LANDSCAPE ARCHITECT OF ANY CONFLICT WITH PROPOSED IMPROVEMENTS. CONTRACTOR SHALL BE RESPONSIBLE FOR COSTS INCURRED DUE TO DAMAGE AND REPLACEMENT OF SAID UTILITIES.
7. WHERE CONFLICTS OCCUR BETWEEN DRAWINGS AND ACTUAL FIELD CONDITION, NOTIFY LANDSCAPE ARCHITECT IMMEDIATELY IN WRITING FOR CLARIFICATION. FAILURE TO PROVIDE NOTIFICATION MAY HOLD CONTRACTOR LIABLE FOR COSTS INCURRED TO RECTIFY THE PROBLEM, IF REQUIRED.
8. PRIOR TO INSTALLATION OF ANY PAVING, REFER TO PROJECT'S GEOTECHNICAL REPORT. REPORT DISCREPANCIES BETWEEN GEOTECHNICAL REPORT'S RECOMMENDATIONS AND INFORMATION NOTED IN THE PAVING SCHEDULE, PAVING DETAILS OR PAVING SPECIFICATIONS.
9. ANY EXISTING MATERIALS DAMAGED DURING CONSTRUCTION SHALL BE REPLACED AT THE CONTRACTOR'S EXPENSE.
10. ALL WORK SHALL COMPLY WITH APPLICABLE CODES, STATUTES AND ORDINANCES.
11. COORDINATE CONDUIT, SLEEVES AND EMBEDMENTS PRIOR TO ANY HARDSCAPE CONSTRUCTION.
12. DIMENSION ARE FROM OUTSIDE OF PAVING, WALLS, ETC., UNLESS OTHERWISE NOTED.
13. LOCATIONS OF FEATURES NOT SPECIFICALLY DIMENSIONED MAY BE DETERMINED BY SCALE. CONTACT LANDSCAPE ARCHITECT WHERE CONFLICT OCCURS. WRITTEN DIMENSIONS TAKE PRECEDENCE OVER SCALING OF DRAWINGS.
14. PAVING MOCK-UPS ARE REQUIRED FOR ALL PAVING ON THIS PROJECT. REFER TO PAVING SCHEDULE, PAVING DETAILS AND SPECIFICATIONS FOR ADDITIONAL INFORMATION.
15. OBTAIN APPROVAL OF LANDSCAPE ARCHITECT FOR ALL FORMS PRIOR TO PLACING CONCRETE.
16. THE CONTRACTOR SHALL BE RESPONSIBLE FOR ALL SHORING AND BRACING REQUIRED TO PROTECT PERSONNEL AND ADJACENT PROPERTY DURING CONSTRUCTION. THE CONTRACTOR SHALL ADEQUATELY BRACE ELEMENTS OF THE STRUCTURE DURING CONSTRUCTION TO ENSURE THE SAFETY OF THE SITE AND/OR STRUCTURES.
17. THERE SHALL BE NO DEVIATIONS FROM STRUCTURAL DETAILS WITHOUT THE WRITTEN APPROVAL OF THE STRUCTURAL ENGINEER.
18. NO STRUCTURAL MEMBER SHALL BE CUT, NOTCHED, BORED OR OTHERWISE WEAKENED, EXCEPT AS ALLOWED BY THE UNIFORM BUILDING CODE.
19. CONTRACTOR SHALL SUBMIT COPIES OF ALL SHOP DRAWINGS TO LANDSCAPE ARCHITECT PRIOR TO CONSTRUCTION OF RELATED WORK, AND ALLOW AMPLE TIME FOR LANDSCAPE ARCHITECT'S REVIEW AND COORDINATION PER THE SPECIFICATIONS.
20. THE CONTRACTOR SHALL CAREFULLY STUDY AND COMPARE THE CONTRACT DOCUMENTS WITH EACH OTHER FOR INFORMATION FURNISHED BY THE OWNER AND SHALL IMMEDIATELY REPORT ERRORS, INCONSISTENCIES, OR OMISSIONS DISCOVERED TO THE LANDSCAPE ARCHITECT. THE CONTRACTOR SHALL NOT BE LIABLE TO THE OWNER OR LANDSCAPE ARCHITECT FOR DAMAGE RESULTING FROM ERRORS, INCONSISTENCIES, OR OMISSIONS IN THE CONTRACT DOCUMENTS UNLESS THE CONTRACTOR RECOGNIZED SUCH ERROR, INCONSISTENCY OR OMISSION AND KNOWINGLY FAILED TO REPORT IT TO THE LANDSCAPE ARCHITECT. IF THE CONTRACTOR PERFORMS ANY CONSTRUCTION ACTIVITY KNOWING IT INVOLVES A RECOGNIZED ERROR, INCONSISTENCY OR OMISSION IN THE CONTRACT DOCUMENTS WITHOUT SUCH NOTICE TO THE LANDSCAPE ARCHITECT, THE CONTRACTOR SHALL ASSUME APPROPRIATE RESPONSIBILITY FOR SUCH PERFORMANCE AND SHALL BEAR AND APPROPRIATE AMOUNT OF THE ATTRIBUTABLE COSTS FOR CORRECTION.
21. THE CONTRACTOR SHALL SUPERVISE AND DIRECT THE WORK, USING THE CONTRACTOR'S BEST SKILL AND ATTENTION. THE CONTRACTOR SHALL BE SOLELY RESPONSIBLE FOR AND HAVE CONTROL OVER CONSTRUCTION MEANS, METHODS, TECHNIQUES, SEQUENCES AND PROCEDURES, AND FOR COORDINATING ALL PORTIONS OF THE WORK UNDER THE CONTRACT.
22. TRANSITIONS FROM EXISTING PAVING TO NEW PAVING SHALL BE FLUSH.
23. CONCRETE TO SLOPE FROM FOUNDATIONS AND BUILDINGS TOWARDS DRAIN INLETS AND DRAINAGE SWALES. INSTALL CONCRETE FORMS WITH LONG, SMOOTH GRADIENTS TO ELIMINATE DIPS, RIDGES, ABRUPT CHANGES OF GRADE AND SHARP TRANSITIONS.
24. CONTRACTOR TO NOTIFY LANDSCAPE ARCHITECT WITHIN (4) WORKING DAYS PRIOR TO A CONTRACTOR-REQUESTED SITE MEETING. FAILURE TO PROVIDE APPROPRIATE LEAD TIME MAY RESULT IN CONTRACTOR BEING BACK-CHARGED FOR LANDSCAPE ARCHITECT'S TIME.
25. INSTALL EXPANSION JOINTS AS SHOWN ON PLANS AND WHEREVER PAVING ABUTS ANY VERTICAL SURFACE.
26. SAND THE SEALANT OF EXPANSION JOINTS THAT ABUT VERTICAL SURFACES.
27. SEE ARCHITECT'S DRAWINGS AND SPECIFICATION FOR WATERPROOFING AND WATERPROOFING PROTECTION.
28. VERIFY THAT WATERPROOFING IS COMPLETE AND WATERTIGHT PRIOR TO PAVEMENT INSTALLATION.
29. INSTALL CONCRETE THAT OBTAINS A MINIMUM COMPRESSIVE STRENGTH OF 2,500 P. S. I. AT 28 DAYS UNLESS OTHERWISE SPECIFIED. SUBMIT SAMPLE TO OWNER AND LANDSCAPE ARCHITECT PRIOR TO LAYING OUT FORMS. INSTALL CONCRETE FLATWORK PER RECOMMENDATIONS OF GEOTECHNICAL REPORTS. IN CASE OF CONFLICT BETWEEN SOILS REPORT AND DETAILS, THE MOST STRINGENT REQUIREMENTS WILL APPLY. SEE SPECIFICATIONS.
30. ALL PATHWAYS SHALL HAVE A MAXIMUM SLOPE OF 5% IN THE DIRECTION OF TRAVEL AND A MAXIMUM CROSS-SLOPE OF 2%.

PAVING SCHEDULE:

KEY	ITEM / DESCRIPTION	COLOR	FINISH	SUPPLIER	COMMENTS
P-01	CONCRETE PAVING	NATURAL GRAY CONCRETE	TOP CAST #5	–	SAW-CUT SCORE JOINTS
P-02	STABILIZED DECOMPOSED GRANITE	CALIFORNIA GOLD	–	SOUTHWEST BOULDER & STONE	ORGANIC STABILIZER SEE DETAIL 4/L1.51.
P-03	UNSTABILIZED DECOMPOSED GRANITE	INDIAN RED FINES	–	SOUTHWEST BOULDER & STONE	SEE DETAIL 5/L1.51.
P-04	UNSTABILIZED DECOMPOSED GRANITE	CALIFORNIA GOLD	–	SOUTHWEST BOULDER & STONE	SEE DETAIL 5/L1.51.
P-05	INTEGRAL COLORED CONCRETE PAVING	KAILUA 677 DAVIS COLOR	TOP CAST #5		SAW-CUT SCORE JOINTS

SITE AMENITY SCHEDULE:

KEY	ITEM / DESCRIPTION	COLOR	FINISH	SUPPLIER	COMMENTS
A-01	CAST IN PLACE CONC. STEPPED SEATING ELEMENTS	NATURAL GRAY CONCRETE	TOP CAST #5		SEE DETAILS SHEET L1.52, L1.53
A-02	CAST IN PLACE CONCRETE SEAT WALL (8'-0"L x 2-0"W)	NATURAL	TOP CAST #5		SEE DETAIL 6/L1.53
A-03	CAST IN PLACE CONCRETE SEAT WALL (7'-6"L x 4'-6"W)	NATURAL	TOP CAST #5		SEE DETAIL 11/L1.53
A-04	CAST IN PLACE CONCRETE SEAT WALL (4'-0"L x 2'-6"W)	NATURAL	TOP CAST #5		SEE DETAIL 6/L1.53
A-05	PRECAST CONCRETE PICNIC TABLE #QSTD90PT	NATURAL	–	AVAILABLE AT QCP 866-703-3434	QTY: 4 SEE DETAIL 10/L1.51. ANCHOR IN PLACE.
A-06	PRECAST CONCRETE PICNIC TABLE ADA COMPLIANT #QSTD90PT-ADA	NATURAL	–	AVAILABLE AT QCP 866-703-3434	QTY: 2 SEE DETAIL 7/L1.51. ANCHOR IN PLACE.

LANDSCAPE SHEET INDEX

L1.00 LANDSCAPE CONSTRUCTION SCHEDULE
L1.11 LANDSCAPE CONSTRUCTION PLAN
L1.31 LANDSCAPE CONSTRUCTION ENLARGEMENT PLAN
L1.32 LANDSCAPE CONSTRUCTION ENLARGEMENT PLAN
L1.51 LANDSCAPE CONSTRUCTION DETAILS
L1.52 LANDSCAPE CONSTRUCTION DETAILS
L1.53 LANDSCAPE CONSTRUCTION DETAILS
L2.00 LANDSCAPE IRRIGATION LEGEND AND NOTES
L2.11 LANDSCAPE IRRIGATION PLAN
L2.51 IRRIGATION DETAILS
L2.52 IRRIGATION DETAILS
L3.00 LANDSCAPE PLANTING LEGEND & NOTES
L3.11 LANDSCAPE PLANTING PLAN
L3.51 LANDSCAPE PLANTING DETAILS

IDENTIFICATION STAMP
DIV. OF THE STATE ARCHITECT
APP. 03-119458 INC:
REVIEWED FOR
SS ☑ FLS ☑ ACS ☑
DATE: 05/23/2019

DIVISION OF STATE ARCHITECT
355 South Grand Avenue, Suite 2100
Los Angeles, California. 90012
ph: (213) 897-3995 Fax: (213) 897-3159
agency

tBP
architecture
planning
interiors
tBP/Architecture
4611 Teller Avenue
Newport Beach, CA 92660
ph: 949.673.0300 fx: 949.732.3895
architect

AHBE
LANDSCAPE ARCHITECTS
617 WEST SEVENTH STREET
SUITE 304
LOS ANGELES, CA 90017
T: 213.624.3800 F: 213.624.3801
consultant

COMPTON COLLEGE
INSTRUCTIONAL BUILDING No. 2
COMPTON COMMUNITY COLLEGE DISTRICT
1111 E. ARTESIA BLVD. COMPTON, CA.
owner

tBP project number : 20998.00
file name:
drawn by: checked by:
date: 04/08/19

Rev:	date:	description:

THIS DRAWING AND THE DESIGNS, DIRECTIONS, IDEAS AND OTHER INFORMATION SIGNIFIED HEREIN CONSTITUTE UNPUBLISHED WORK OF tBP/ARCHITECTURE AND SHALL REMAIN THE PROPERTY OF tBP/ARCHITECTURE IN PERPETUITY. NO PART THEREOF SHALL BE REPRODUCED, ENGRAVED, DISTRIBUTED, SOLD, PUBLISHED OR OTHERWISE USED IN ANY WAY WITHOUT THE ADVANCED EXPRESS WRITTEN CONSENT OF tBP/ARCHITECTURE.

drawing title:
Landscape
Construction Schedule

drawing no.:
L1.00
drawing of

CONSTRUCTION KEYNOTES:

1. COLD/EXPANSION JOINT.
2. SAWCUT JOINT.
3. STEEL EDGING.
4. IRRIGATION EQUIPMENT.
5. ACCESSIBLE CLEAR FLOOR SPACE.

EXISTING REFERENCES:
51. CONCRETE WALK TO REMAIN.
52. CONCRETE CURB TO REMAIN.
53. BLUE PHONE TO REMAIN.
54. FIRE HYDRANT TO REMAIN.
55. ROOF ACCESS HATCH TO REMAIN.
56. MECH. EQUIP PAD TO REMAIN.

CIVIL REFERENCES:
61. A/C PAVING.
62. CONCRETE CURB.
63. CURB RAMP
64. FIRE HYDRANT.
65. CATCH BASIN.
66. MANHOLE/UNDERGROUND UTILITY.

ARCHITECTURAL REFERENCES:
71. PATIO WALL.
72. TRASH ENCLOSURE.
73. BOLLARD.

ELECTRICAL REFERENCES:
81. POLE LIGHT.
82. ELECTRICAL TRANSFORMER.

IDENTIFICATION STAMP
DIV. OF THE STATE ARCHITECT
APP. 03-119458 INC:
REVIEWED FOR
SS ☑ FLS ☑ ACS ☑
DATE:05/23/2019

DIVISION OF STATE ARCHITECT
355 South Grand Avenue, Suite 2100
Los Angeles, California. 90012
ph: (213) 897-3995 Fax: (213) 897-3159
agency

tBP
architecture planning interiors
tBP/Architecture
4611 Teller Avenue
Newport Beach, CA 92660
ph: 949.673.0300 fx: 949.732.3895
architect

AHBE
LANDSCAPE ARCHITECTS
617 WEST SEVENTH STREET
SUITE 304
LOS ANGELES, CA 90017
T: 213.694.3800 F: 213.694.3801
consultant

COMPTON COLLEGE
INSTRUCTIONAL BUILDING No. 2

COMPTON COMMUNITY COLLEGE DISTRICT
1111 E. ARTESIA BLVD. COMPTON, CA.

owner

tBP project number : 20998.00
file name:
drawn by: checked by:
date: 04/08/19

Rev:	date:	description:

THIS DRAWING AND THE DESIGNS, DEPICTIONS, IDEAS AND OTHER INFORMATION CONTAINED HEREIN CONSTITUTE UNPUBLISHED WORK OF tBP/ARCHITECTURE AND SHALL REMAIN THE PROPERTY OF tBP/ARCHITECTURE IN PERPETUITY. NO PART THEREOF SHALL BE REPRODUCED, DISCLOSED, DISTRIBUTED, SOLD, PUBLISHED OR OTHERWISE USED IN ANY WAY WITHOUT THE ADVANCED EXPRESS WRITTEN CONSENT OF tBP/ARCHITECTURE.

drawing title:
Landscape Construction Plan

drawing no.:
L1.11
drawing of

(E) INSTRUCTIONAL BUILDING #1

LIMIT OF WORK

INSTRUCTIONAL BUILDING #2

MATCH LINE - SEE SHEET L1.32

ALIGN W/ BLDG. FACE

BLDG. FACE

LIMIT OF WORK

(E) BLDG. Q

(E) BUILDING C

PA

TYP.

EQ. EQ.

SCALE: 1" = 10'

0 5' 10' 20' 40'

CONSTRUCTION KEYNOTES:

1. COLD/EXPANSION JOINT.
2. SAWCUT JOINT.
3. STEEL EDGING.
4. IRRIGATION EQUIPMENT.
5. ACCESSIBLE CLEAR FLOOR SPACE.

EXISTING REFERENCES:
51. CONCRETE WALK TO REMAIN.
52. CONCRETE CURB TO REMAIN.
53. BLUE PHONE TO REMAIN.
54. FIRE HYDRANT TO REMAIN.
55. ROOF ACCESS HATCH TO REMAIN.
56. MECH. EQUIP PAD TO REMAIN.

CIVIL REFERENCES:
61. A/C PAVING.
62. CONCRETE CURB.
63. CURB RAMP
64. FIRE HYDRANT.
65. CATCH BASIN.
66. MANHOLE/UNDERGROUND UTILITY.

ARCHITECTURAL REFERENCES:
71. PATIO WALL.
72. TRASH ENCLOSURE.
73. BOLLARD.

ELECTRICAL REFERENCES:
81. POLE LIGHT.
82. ELECTRICAL TRANSFORMER.

IDENTIFICATION STAMP
DIV. OF THE STATE ARCHITECT
APP. 03-119458 INC:
REVIEWED FOR
SS ☑ FLS ☑ ACS ☑
DATE:05/23/2019

DIVISION OF STATE ARCHITECT
355 South Grand Avenue, Suite 2100
Los Angeles, California. 90012
ph: (213) 897-3995 Fax: (213) 897-3159
agency

tBP architecture planning interiors
tBP/Architecture
4611 Teller Avenue
Newport Beach, CA 92660
ph: 949.673.0300 fx: 949.732.3895
architect

AHBE LANDSCAPE ARCHITECTS
617 WEST SEVENTH STREET
SUITE 304
LOS ANGELES, CA 90017
T: 213.624.3900 F: 213.624.3901
consultant

COMPTON COLLEGE
INSTRUCTIONAL BUILDING No. 2

COMPTON COMMUNITY COLLEGE DISTRICT
1111 E. ARTESIA BLVD. COMPTON, CA.

owner

tBP project number : 20998.00
file name:
drawn by: checked by:
date: 04/08/19

Rev:	date:	description:

THE DRAWING AND THE DESIGNS, EXPRESSIONS, IDEAS AND OTHER INFORMATION CONTAINED HEREIN CONSTITUTE UNPUBLISHED WORK OF tBP/ARCHITECTURE AND SHALL REMAIN THE PROPERTY OF tBP/ARCHITECTURE IN PERPETUITY. NO PART THEREOF SHALL BE REPRODUCED, MODIFIED, DISTRIBUTED, SOLD, PUBLISHED OR OTHERWISE USED IN ANY WAY WITHOUT THE ADVANCED EXPRESS WRITTEN CONSENT OF tBP/ARCHITECTURE.

drawing title:
Landscape Construction Enlargement Plan

drawing no.:
L1.31
drawing of

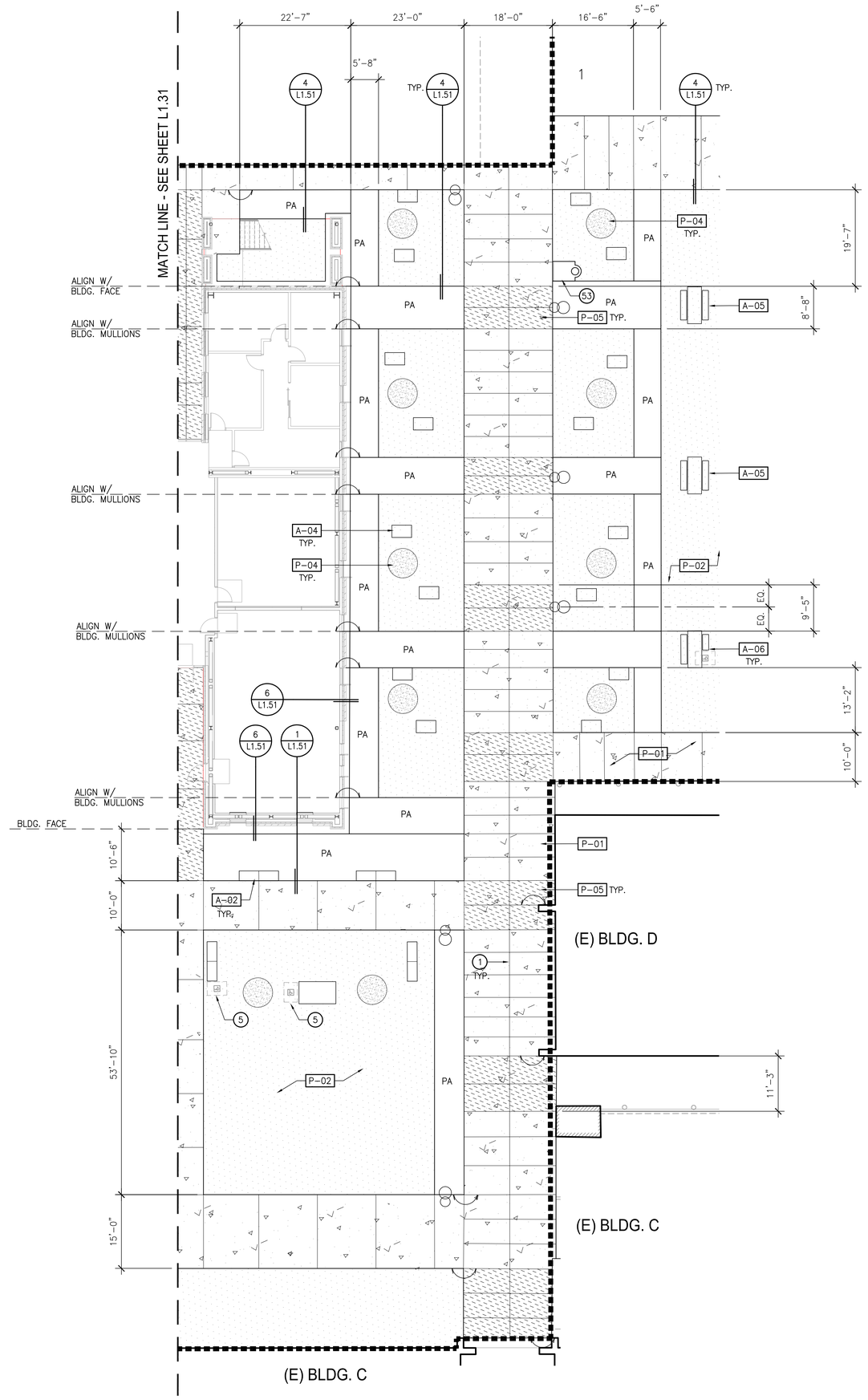

CONSTRUCTION KEYNOTES:

1. COLD/EXPANSION JOINT.
2. SAWCUT JOINT.
3. STEEL EDGING.
4. IRRIGATION EQUIPMENT.
5. ACCESSIBLE CLEAR FLOOR SPACE.

EXISTING REFERENCES:
51. CONCRETE WALK TO REMAIN.
52. CONCRETE CURB TO REMAIN.
53. BLUE PHONE TO REMAIN.
54. FIRE HYDRANT TO REMAIN.
55. ROOF ACCESS HATCH TO REMAIN.
56. MECH. EQUIP PAD TO REMAIN.

CIVIL REFERENCES:
61. A/C PAVING.
62. CONCRETE CURB.
63. CURB RAMP
64. FIRE HYDRANT.
65. CATCH BASIN.
66. MANHOLE/UNDERGROUND UTILITY.

ARCHITECTURAL REFERENCES:
71. PATIO WALL.
72. TRASH ENCLOSURE.
73. BOLLARD.

ELECTRICAL REFERENCES:
81. POLE LIGHT.
82. ELECTRICAL TRANSFORMER.

SCALE: 1" = 10'
0 5' 10' 20' 40'

IDENTIFICATION STAMP
DIV. OF THE STATE ARCHITECT
APP. 03-119458 INC:
REVIEWED FOR
SS ☑ FLS ☑ ACS ☑
DATE: 05/23/2019

DIVISION OF STATE ARCHITECT
355 South Grand Avenue, Suite 2100
Los Angeles, California. 90012
ph: (213) 897-3995 Fax: (213) 897-3159
agency

tBP architecture planning interiors
tBP/Architecture
4611 Teller Avenue
Newport Beach, CA 92660
ph: 949.673.0300 fx: 949.732.3895
architect

AHBE LANDSCAPE ARCHITECTS
617 WEST SEVENTH STREET
SUITE 304
LOS ANGELES, CA 90017
T: 213.624.3800 F: 213.624.3801
consultant

COMPTON COLLEGE
INSTRUCTIONAL BUILDING No. 2

COMPTON COMMUNITY COLLEGE DISTRICT
1111 E. ARTESIA BLVD. COMPTON, CA.

owner

tBP project number : 20998.00
file name:
drawn by: checked by:
date: 04/08/19

Rev:	date:	description:

THE DRAWING AND THE DESIGNS, EXPRESSIONS, IDEAS AND OTHER INFORMATION CONTAINED HEREIN CONSTITUTE UNPUBLISHED WORK OF tBP/ARCHITECTURE AND SHALL REMAIN THE PROPERTY OF tBP/ARCHITECTURE IN PERPETUITY. NO PART THEREOF SHALL BE REPRODUCED, PUBLISHED, DISTRIBUTED, SOLD, PUBLISHED OR OTHERWISE USED IN ANY WAY WITHOUT THE ADVANCED EXPRESS WRITTEN CONSENT OF tBP/ARCHITECTURE.

drawing title:
Landscape Construction Enlargement Plan

drawing no.:
L1.32
drawing of

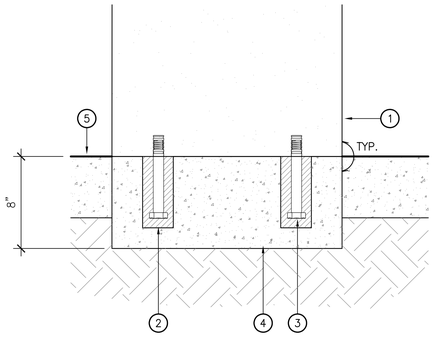

LEGEND

1. TABLE/BENCH LEG.
2. 2" DIA X 5" DEEP GROUT POCKET.
3. 1/2" DIA X 4 1/2" L. S.S. BOLTS, PER MANUFACTURERS RECOMMENDATIONS.
4. CONC. FOOTING.
5. CONCRETE PAVING FINISH SURFACE.

10 PICNIC TABLE FOOTING
SCALE: 3" = 1'-0"

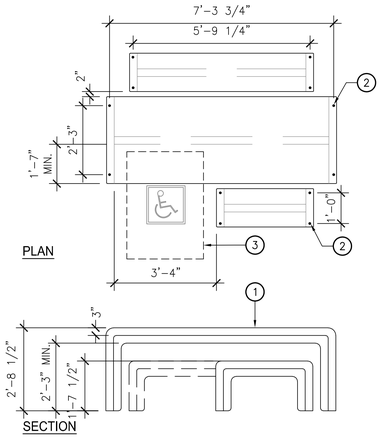

LEGEND

1. PICNIC TABLE. SEE SITE AMENITY SCHEDULE.
2. DRILL HOLES FOR ANCHORING. SEE TABLE ANCHOR DETAIL 10/L1.51. INSTALL PER MANUFACTURER'S RECOMMENDATION.
3. ACCESSIBLE SPACE.

7 ACCESSIBLE PICNIC TABLE
SCALE: 1/2" = 1'-0"

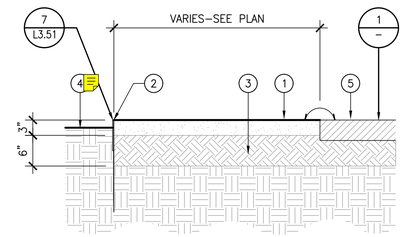

LEGEND

1. STABILIZED D.G. SURFACE. 3" DEPTH
2. STEEL EDGING, PLACE ON INTERIOR SIDE OF PATH. INSTALL PER MANUF. RECOMMENDATIONS.
3. 90% COMPACTED SUBGRADE.
4. F.G.
5. ADJ. PAVED SURFACE OR CURB. WHERE D.G. IS ADJ. WALKABLE SURFACE, TOP OF D.G. IS TO BE LEVEL WITH PAVEMENT'S F.S.

4 DECOMPOSED GRANITE SURFACE
SCALE: 1" = 1'-0"

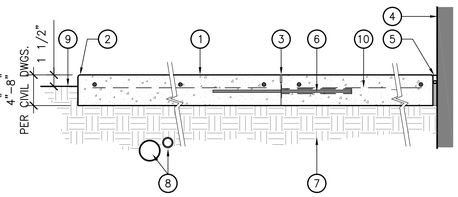

LEGEND

1. CONC. PAVING – FINISH PER PLAN.
2. 1/4" RADIUS, ALL EXPOSED EDGES.
3. COLD JOINT.
4. BLDG. FACE OR VERTICAL SURFACE.
5. EXPANSION JOINT. SEE CONCRETE JOINTS DETAIL.
6. SPEED DOWEL. SEE CONCRETE JOINTS DETAIL.
7. COMPACTED SUBGRADE PER GEOTECHNICAL REPORT. – MAINTAIN EVEN SURFACE, FREE OF DEBRIS. SLOPE AS REQUIRED.
8. CONDUITS, SLEEVES, ETC. SHALL BE BENEATH SAND BASE, DEPTH AND BACKFILL PER SPECIFICATIONS.
9. FINISH GRADE.
10. REBAR REINFORCEMENT PER CIVIL DRAWINGS.

1 CONCRETE PAVING
SCALE: 1-1/2" = 1'-0"

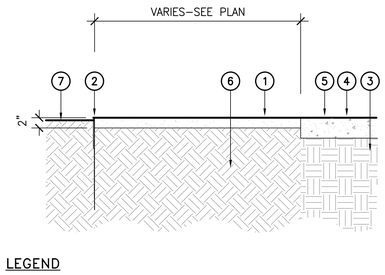

LEGEND

1. 1/8"MIN. TO 1/4"MAX. NO FINES D.G. SURFACE.
2. MTL. EDGING, PLACE ON INTERIOR SIDE OF PATH. INSTALL PER MANUF. RECOMMENDATIONS.
3. 90% COMPACTED SUBGRADE.
4. F.S.
5. ADJ. PAVED SURFACE OR CURB. WHERE DG IS ADJ. WALKABLE SURFACE. TOP OF DG IS TO BE LEVEL WITH PAVEMENT'S F.S.
6. PLANTING SOIL
7. F.G.

5 NON-STABILIZED DECOMPOSED GRANITE
SCALE: 1" = 1'-0" .dwg

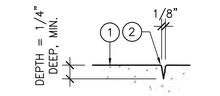

TOOLED JOINT AT BROOM FINISH

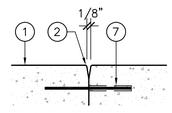

TOOLED COLD JOINT

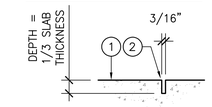

SAWCUT JOINTS AT RETARDANT FINISH

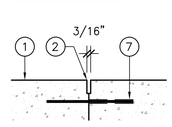

SAWCUT COLD JOINT

LEGEND

1. PAVING FINISH SURFACE.
2. SCORE JOINT.
3. 1/8" R. AT EDGES. TYP.
4. EXPANSION JOINT FILLER.
5. JOINT SEALANT. COLOR TO BE SELECTED BY LANDSCAPE ARCHITECT. SUBMIT COLOR SAMPLES PRIOR TO INSTALLATION. CONTRACTOR TO APPLY SILICA SAND (30 GRIT) TO EXPOSED SURFACE OF SEALANT AT EXPANSION JOINTS.
6. BACKER ROD.
7. 18" #4 REBAR WITH #4 SPEED DOWEL @ 36" O.C.
8. BLDG. FACE OR VERTICAL SURFACE.

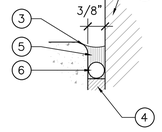

EXPANSION JOINT AT VERT.

2 CONCRETE PAVING JOINTS
SCALE: N.T.S.

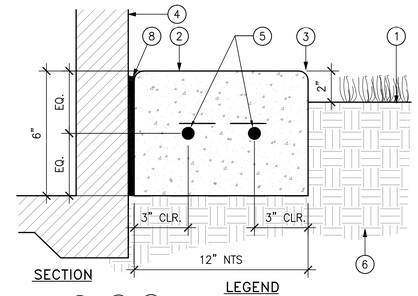

LEGEND

1. FINISH GRADE IN GROUNDCOVER. OR SHRUB AREA.
2. CONCRETE, SMOOTH TROWEL FINISH.
3. 1/4" RADIUS TOOLED EDGE.
4. BUILDING FACE.
5. (2) #3 REBAR, CONTINUOUS; #3 @ 24" O.C.
6. COMP. SOIL 85%
7. TOOLED JOINT (OR AS SHOWN ON PLAN) @ 10' O.C.
8. E.J.

6 CONCRETE MAINTENANCE STRIP @ BLDG
SCALE: N.T.S. .dwg

IDENTIFICATION STAMP
DIV. OF THE STATE ARCHITECT
APP. 03-119458 INC:
REVIEWED FOR
SS ☑ FLS ☑ ACS ☑
DATE:05/23/2019

DIVISION OF STATE ARCHITECT
355 South Grand Avenue, Suite 2100
Los Angeles, California. 90012
ph: (213) 897-3995 Fax: (213) 897-3159
agency

tBP
architecture
planning
interiors

tBP/Architecture
4611 Teller Avenue
Newport Beach, CA 92660
ph: 949.673.0300 fx: 940.732.3895
architect

AHBE
LANDSCAPE ARCHITECTS
617 WEST SEVENTH STREET
SUITE 304
LOS ANGELES, CA 90017
T: 213.624.3800 F: 213.624.3901
consultant

COMPTON COLLEGE
INSTRUCTIONAL BUILDING No. 2
COMPTON COMMUNITY COLLEGE DISTRICT
1111 E. ARTESIA BLVD. COMPTON, CA.
owner

tBP project number : 20998.00
file name:
drawn by: checked by:
date: 04/08/19

Rev:	date:	description:

THE DRAWING AND THE DESIGNS, EXPRESSIONS, IDEAS AND OTHER INFORMATION CONTAINED HEREIN CONSTITUTE UNPUBLISHED WORK OF tBP/ARCHITECTURE AND SHALL REMAIN THE PROPERTY OF tBP/ARCHITECTURE IN PERPETUITY. NO PART THEREOF SHALL BE REPRODUCED, DISCLOSED, DISTRIBUTED, SOLD, PUBLISHED OR OTHERWISE USED IN ANY WAY WITHOUT THE ADVANCED EXPRESS WRITTEN CONSENT OF tBP/ARCHITECTURE.

drawing title:
Landscape
Construction Details

drawing no.:
L1.51
drawing of

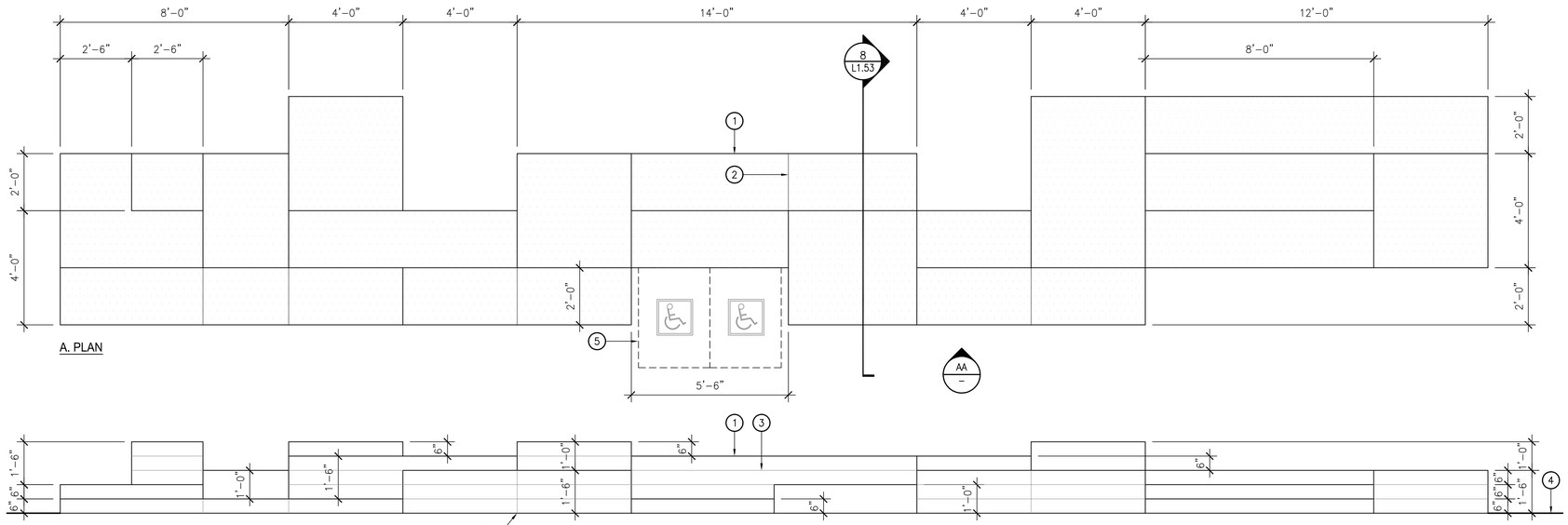

A. PLAN

AA. FRONT ELEVATION

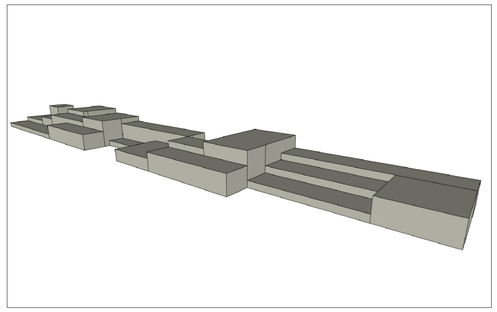

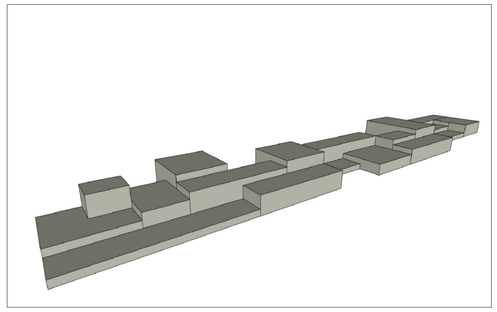

A. 3D MODEL FOR REFERENCE

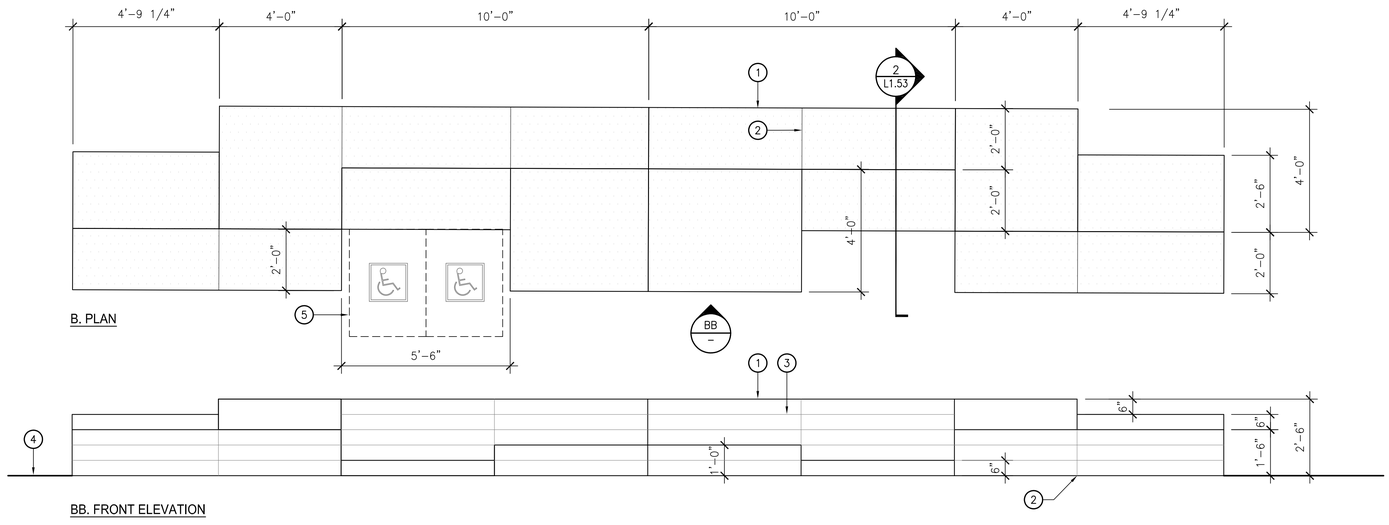

B. PLAN

BB. FRONT ELEVATION

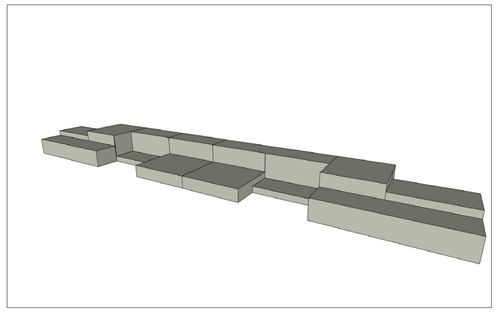

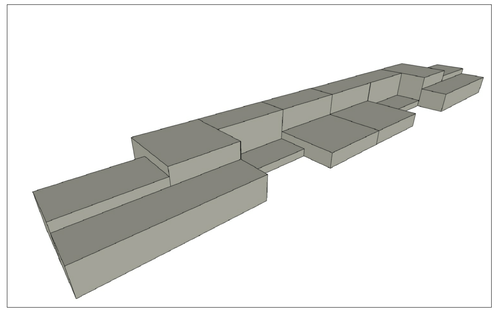

B. 3D MODEL FOR REFERENCE

LEGEND

1. CAST IN PLACE CONC. STEPPED SEAT WALL.
2. 3/16" SAW CUT JOINT (VERTICAL).
3. 1/8" TOOLED JOINT (HORIZONTAL).
4. FINISH GRADE.
5. ACCESSIBLE SPACE.

12 CONC. STEPPED SEAT WALL A & B

SCALE: 1/2" = 1'–0"

IDENTIFICATION STAMP
DIV. OF THE STATE ARCHITECT
APP. 03-119458 INC:
REVIEWED FOR
SS ☑ FLS ☑ ACS ☑
DATE:05/23/2019

DIVISION OF STATE ARCHITECT
355 South Grand Avenue, Suite 2100
Los Angeles, California. 90012
ph: (213) 897-3995 Fax: (213) 897-3159
agency

tBP
architecture
planning
interiors

tBP/Architecture
4611 Teller Avenue
Newport Beach, CA 92660
ph: 949.673.0300 fx: 949.732.3895
architect

AHBE
LANDSCAPE ARCHITECTS
617 WEST SEVENTH STREET
SUITE 304
LOS ANGELES, CA 90017
T: 213.694.3800 F: 213.694.3801
consultant

COMPTON COLLEGE
INSTRUCTIONAL BUILDING No. 2

COMPTON COMMUNITY COLLEGE DISTRICT
1111 E. ARTESIA BLVD. COMPTON, CA.

owner

tBP project number : 20998.00
file name:
drawn by: checked by:
date: 04/08/19

Rev:	date:	description:

THE DRAWING AND THE DESIGNS, EXPRESSIONS, IDEAS AND OTHER INFORMATION CONTAINED HEREIN CONSTITUTE UNPUBLISHED WORK OF tBP/ARCHITECTURE, AND SHALL REMAIN THE PROPERTY OF tBP/ARCHITECTURE IN PERPETUITY. NO PART THEREOF SHALL BE REPRODUCED, DISSEMINATED, SOLD, PUBLISHED OR OTHERWISE USED IN ANY WAY WITHOUT THE ADVANCED EXPRESS WRITTEN CONSENT OF tBP/ARCHITECTURE.

drawing title:
Landscape
Construction Details

drawing no.:
L1.52
drawing of

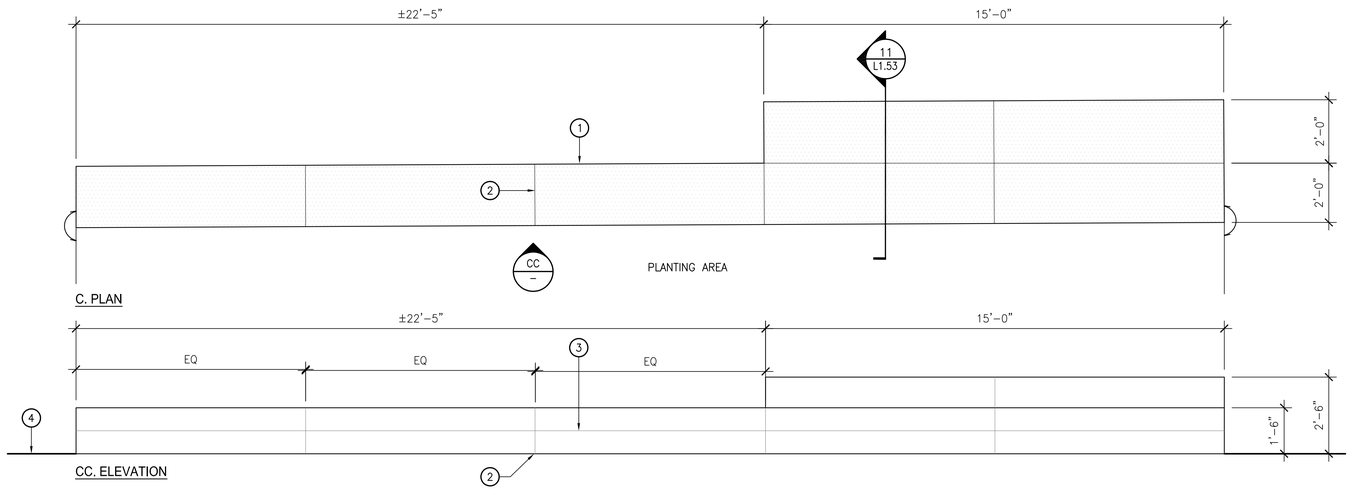

LEGEND

1. CAST IN PLACE CONC. STEPPED SEAT WALL.
2. 3/16" SAW CUT JOINT (VERTICAL).
3. 1/8" TOOLED JOINT (HORIZONTAL).
4. FINISH GRADE.

10 CONC. SEAT WALL C
SCALE: 1/2"=1'-0"

1/2"=1'-0"

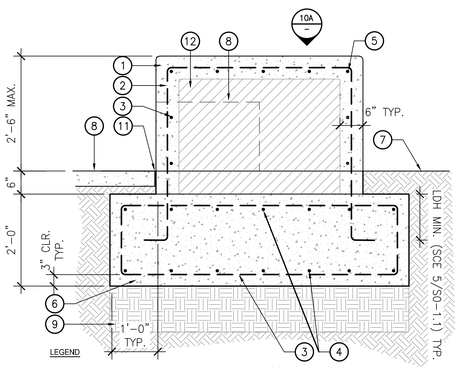

LEGEND

1. CAST IN PLACE CONC. STEPPED SEATING WALL. 1/2" RADIUS ON ALL EXPOSED EDGES.
2. #4 REBAR @ 16" O.C. (CONT.).
3. #4 REBAR @ 12" O.C. (CONT.).
4. #4 REBAR CONT. @ 12" O.C. MAX. AT TOP AND BOTTOM.
5. #4 REBAR CONT. @ CORNER.
6. CONC. FOOTING.
7. FINISH GRADE AT PLANTING AREA.
8. FINISH SURFACE AT ADJACENT CONC. PAVING.
9. COMPACTED SUBGRADE PER GEOTECHNICAL REPORT.
10. STEPPED WALL BEYOND.
11. EXPANSION JOINT.
12. STRUCTURAL FOAM FILL.

11 CONC. SEAT WALL C - SECTION
SCALE: 3/4" = 1'-0"

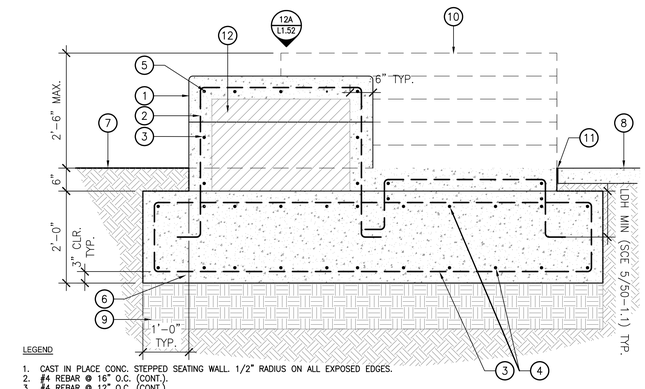

LEGEND

1. CAST IN PLACE CONC. STEPPED SEATING WALL. 1/2" RADIUS ON ALL EXPOSED EDGES.
2. #4 REBAR @ 16" O.C. (CONT.).
3. #4 REBAR @ 12" O.C. (CONT.).
4. #4 REBAR CONT. @ 12" O.C. MAX. AT TOP AND BOTTOM.
5. #4 REBAR CONT. @ CORNER.
6. CONC. FOOTING.
7. FINISH GRADE AT PLANTING AREA.
8. FINISH SURFACE AT ADJACENT CONC. PAVING.
9. COMPACTED SUBGRADE PER GEOTECHNICAL REPORT.
10. STEPPED WALL BEYOND.
11. EXPANSION JOINT.
12. STRUCTURAL FOAM FILL.

8 CONC. STEPPED SEAT WALL A - SECTION
SCALE: 3/4" = 1'-0"

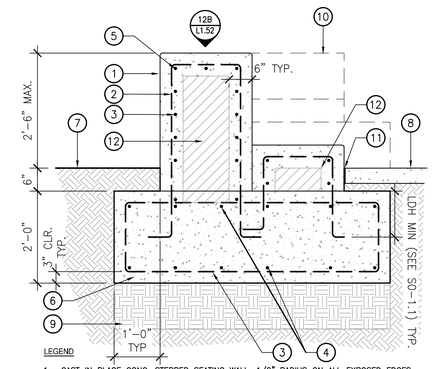

LEGEND

1. CAST IN PLACE CONC. STEPPED SEATING WALL. 1/2" RADIUS ON ALL EXPOSED EDGES.
2. #4 REBAR @ 16" O.C. (CONT.).
3. #4 REBAR @ 12" O.C. (CONT.).
4. #4 REBAR CONT. @ 12" O.C. MAX. AT TOP AND BOTTOM.
5. #4 REBAR CONT. @ CORNER.
6. CONC. FOOTING.
7. FINISH GRADE AT PLANTING AREA.
8. FINISH SURFACE AT ADJACENT CONC. PAVING.
9. COMPACTED SUBGRADE PER GEOTECHNICAL REPORT.
10. STEPPED WALL BEYOND.
11. EXPANSION JOINT.
12. STRUCTURAL FOAM FILL.

2 CONC. STEPPED SEAT WALL B - SECTION
SCALE: 3/4" = 1'-0"

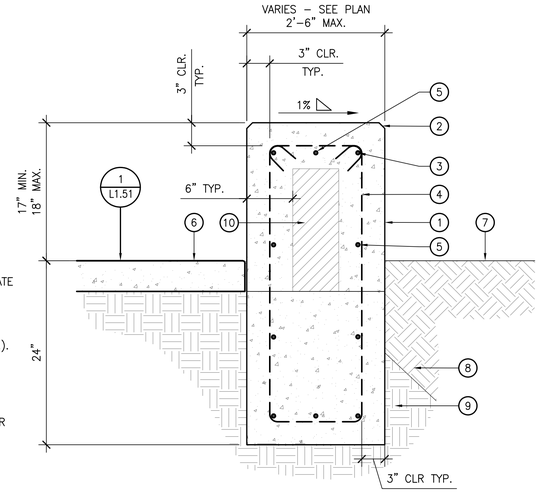

LEGEND

1. C.I.P. CONC. SEAT WALL. LOCATE WALL JOINTS PER PLAN/ELEVATION.
2. 1/2" CHAMFER EDGE (CONT.).
3. 4 – #4 CONT. AT CORNERS.
4. #4 REBAR @ 16" O.C. (CONT.).
5. #4 REBAR @ 12" O.C. MAX.
6. FINISH SURFACE.
7. FINISH GRADE.
8. AMENDED SOIL PER SPECIFICATIONS.
9. COMPACTED SUBGRADE TO PER GEOTECHNICAL REPORT.
10. STRUCTURAL FOAM FILL.

6 CONCRETE SEATWALL
SCALE: 1-1/2" = 1'-0"

.dwg

IDENTIFICATION STAMP
DIV. OF THE STATE ARCHITECT
APP. 03-119458 INC:
REVIEWED FOR
SS ☑ FLS ☑ ACS ☑
DATE:05/23/2019

DIVISION OF STATE ARCHITECT
355 South Grand Avenue, Suite 2100
Los Angeles, California. 90012
ph: (213) 897-3995 Fax: (213) 897-3159
agency

tBP
architecture
planning
interiors

tBP/Architecture
4611 Teller Avenue
Newport Beach, CA 92660
ph: 949.673.0300 fx: 949.732.3895
architect

AHBE
LANDSCAPE ARCHITECTS
617 WEST SEVENTH STREET
SUITE 304
LOS ANGELES, CA 90017
T: 213.694.3800 F: 213.694.3801
consultant

COMPTON COLLEGE
INSTRUCTIONAL BUILDING No. 2

COMPTON COMMUNITY COLLEGE DISTRICT
1111 E. ARTESIA BLVD. COMPTON, CA.

owner

tBP project number : 20998.00
file name:
drawn by: checked by:
date: 04/08/19

Rev:	date:	description:

THE DRAWING AND THE DESIGNS, EXPRESSIONS, IDEAS AND OTHER INFORMATION CONTAINED HEREIN CONSTITUTE UNPUBLISHED WORK OF tBP/ARCHITECTURE AND SHALL REMAIN THE PROPERTY OF tBP/ARCHITECTURE IN PERPETUITY. NO PART THEREOF SHALL BE REPRODUCED, PUBLISHED, DISTRIBUTED, SOLD, PUBLISHED OR OTHERWISE USED IN ANY WAY WITHOUT THE ADVANCED EXPRESS WRITTEN CONSENT OF tBP/ARCHITECTURE.

drawing title:
Landscape
Construction Details

drawing no.:
L1.53
drawing of

WATER AUDIT AND MAINTENANCE SCHEDULE

THE CONTRACTOR WILL CONDUCT AN IRRIGATION AUDIT USING A CERTIFIED IRRIGATION AUDITOR, AFTER THE FINAL FIELD OBSERVATION HAS BEEN COMPLETED AND ALL IRRIGATION COMPONENTS ARE INSTALLED IN ACCORDANCE WITH THE PLANS AND SPECIFICATIONS AND THE IRRIGATION SYSTEM IS ACCEPTED BY THE PROJECT ARCHITECT FOR MAINTENANCE.

THE IRRIGATION AUDIT WILL BE CONDUCTED IN ACCORDANCE WITH THE FOLLOWING SCHEDULE:

1. PLACE FLAGS AT EACH HEAD IN THE ZONE
2. MEASURE SPACING AND MARK MID POINTS BETWEEN HEADS.
3. PLACE WATER MEASURING RECEPTACLES.
4. TAKE READINGS OF WATER LEVEL IN RECEPTACLES AND RECORD RESULTS.
5. MEASURE HEAD PRESSURE IN EACH ZONE AND RECORD RESULTS.
6. AFTER COMPLETING ZONE ADVANCE TO NEXT ZONE AND REPEAT PROCEDURE.
7. SUBMIT THE RESULTS OF THE AUDIT TO THE PROJECT ARCHITECT.

THE IRRIGATION MAINTENANCE SCHEDULE TASKS LISTED BELOW ARE INTENDED AS MINIMUM STANDARDS AND MORE FREQUENT ATTENTION MAY BE REQUIRED DEPENDING ON THE PARTICULAR SITE CONDITIONS.

MAINTENANCE TASK

1. CONTROLLER CABINET - OPEN CABINET AND CLEAN OUT DEBRIS AND REPLACE BATTERY AS NECESSARY. CHECK WIRING AND REPAIR AS NEEDED AND CHECK CLOCK AND RESET IF NECESSARY.
FREQUENCY: QUARTERLY

2. IRRIGATION SCHEDULE - ADJUST SCHEDULE FOR SEASONAL VARIATIONS AND OTHER CONDITIONS WHICH MAY AFFECT THE AMOUNT OF WATER NEEDED TO MAINTAIN PLANT HEALTH ADJUST AS NECESSARY.
FREQUENCY: MONTHLY

3. POC - VISUALLY INSPECT COMPONENTS FOR LEAKS, PRESSURE SETTINGS, SETTLEMENT OR OTHER DAMAGE AFFECTING THE OPERATION OF A COMPONENT. REPAIR AS NEEDED.
FREQUENCY: QUARTERLY

4. REMOTE CONTROL VALVES, ISOLATION VALVES AND QUICK COUPLER VALVES - VISUALLY INSPECT FOR LEAKS, SETTLEMENT, WIRE CONNECTIONS AND PRESSURE SETTINGS. REPAIR OR ADJUST AS NEEDED.
FREQUENCY: QUARTERLY

5. MAINLINE & LATERALS - VISUALLY INSPECT FOR LEAKS OR SETTLEMENT OF TRENCH.
FREQUENCY: QUARTERLY

6. SPRINKLERS - VISUALLY CHECK FOR ANY BROKEN MISALIGNED OR CLOGGED HEADS. HEADS WITH INCORRECT ARC, INADEQUATE COVERAGE OR OVERSPRAY AND LOW HEAD DRAINAGE. REPAIR AS NEEDED.
FREQUENCY: WEEKLY

7. FILTERS AND STRAINERS - VISUALLY CHECK FOR LEAKS, BROKEN FITTING, CLEAN AND FLUSH SCREENS.

AUDIT SHALL BE IN ACCORDANCE WITH THE LATEST STATE OF CALIFORNIA LANDSCAPE WATER MANAGEMENT PROGRAM AS DESCRIBED IN THE LATEST LANDSCAPE IRRIGATION AUDITOR HANDBOOK. THE LANDSCAPE IRRIGATION AUDITS TO BE CONDUCTED BY A QUALIFIED INDIVIDUAL AND THE AUDIT SCHEDULE SHALL BE CONDUCTED AT LEAST ONCE EVERY FIVE YEARS IN ACCORDANCE WITH THE REQUIREMENTS OF TITLE 20, DIVISION 1 OF THE LOS ANGELES COUNTY CODE.

MAINTENANCE SCHEDULES:
MAINTENANCE SCHEDULES. A REGULAR MAINTENANCE SCHEDULE SATISFYING THE FOLLOWING CONDITIONS SHALL BE SUBMITTED AS PART OF THE LANDSCAPE DOCUMENTATION PACKAGE.

LANDSCAPE SHALL BE MAINTAINED TO ENSURE WATER EFFICIENCY. A REGULAR MAINTENANCE SCHEDULE SHALL INCLUDE, BUT NOT BE LIMITED TO, CHECKING, ADJUSTING, AND REPAIRING IRRIGATION EQUIPMENT, RESETTING THE AUTOMATIC CONTROLLER, AERATING AND DETHATCHING TURF AREAS, REPLENISHING MULCH, FERTILIZING, PRUNING, AND WEEDING IN ALL LANDSCAPE AREAS.

WHENEVER POSSIBLE, REPAIR OF IRRIGATION EQUIPMENT SHALL BE DONE WITH THE ORIGINALLY SPECIFIED MATERIALS OR THEIR EQUIVALENTS.

A LANDSCAPE IRRIGATION AUDIT SCHEDULE AS REQUIRED IN CHAPTER 20.09 OF TITLE 20 MAY BE RECOMMENDED. THE MAXIMUM PERIOD BETWEEN AUDITS SHALL BE FIVE YEARS.

IRRIGATION AUDIT SCHEDULES:
LANDSCAPE IRRIGATION AUDIT SCHEDULES. A SCHEDULE OF LANDSCAPE IRRIGATION AUDITS OF AT LEAST EVERY FIVE YEARS MUST BE ESTABLISHED, FOR ALL BUT SINGLE-FAMILY RESIDENCES, AND OTHER PROJECTS WITH LANDSCAPE AREA LESS THAN 1 ACRE (0.405 HA). AS REQUIRED IN CHAPTER 20.09 OF TITLE 20 (UTILITY CODES), AN AUDIT SATISFYING THE FOLLOWING CONDITIONS SHALL BE SUBMITTED TO THE COUNTY AS PART OF THE LANDSCAPE DOCUMENTATION PACKAGE.

AT A MINIMUM, AUDITS SHALL BE IN ACCORDANCE WITH THE LATEST STATE OF CALIFORNIA LANDSCAPE WATER MANAGEMENT PROGRAM AS DESCRIBED IN THE LANDSCAPE IRRIGATION AUDITOR HANDBOOK, PREPARED FOR THE CALIFORNIA DEPARTMENT OF WATER RESOURCES, WATER CONSERVATION OFFICE, THE ENTIRE DOCUMENT, WHICH IS HEREBY INCORPORATED BY REFERENCE.

THE SCHEDULE SHALL PROVIDE FOR LANDSCAPE IRRIGATION AUDITS TO BE CONDUCTED BY A QUALIFIED INDIVIDUAL AS DETERMINED BY THE DIRECTOR AT LEAST ONCE EVERY FIVE YEARS IN ACCORDANCE WITH THE REQUIREMENTS OF TITLE 20, DIVISION 1 OF THE LOS ANGELES COUNTY CODE.

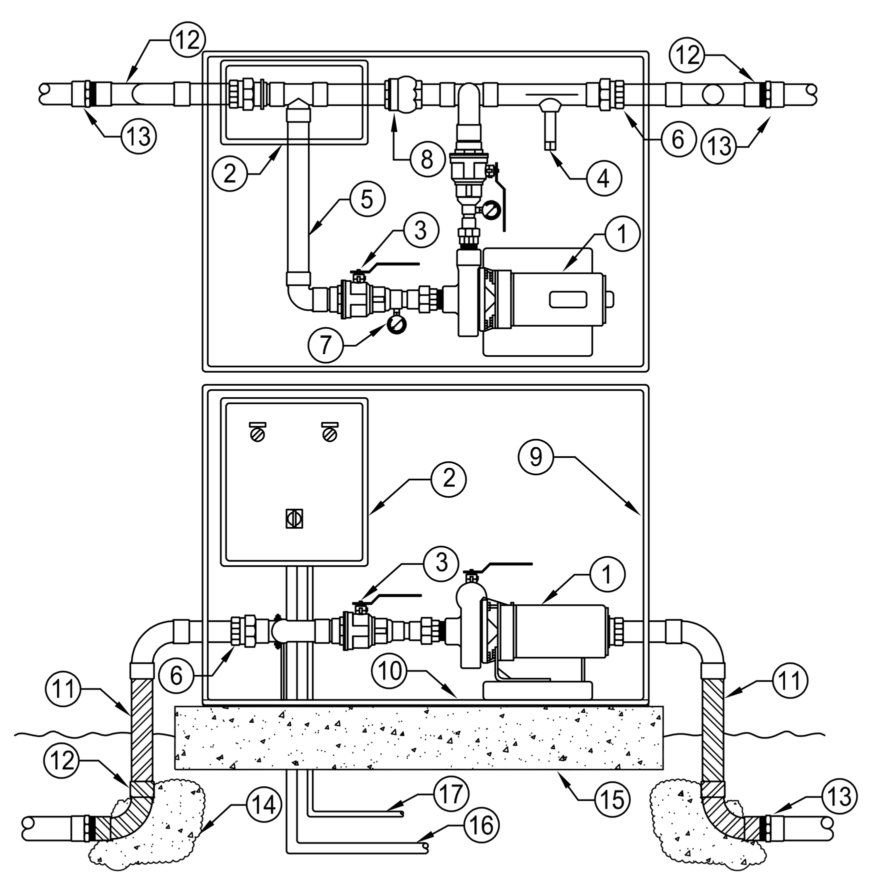

1. CLOSE-COUPLED CENTRIFUGAL PUMP, CAST IRON BRONZE FITTED.
2. NEMA 4X SIMPLEX CONTROL PANEL FOR AUTOMATIC OPERATION.
3. BRONZE 1/4 TURN BALL VALVE
4. BRONZE NON-ADJUSTABLE FLOW SWITCH.
5. TYPE "L" COPPER.
6. BRONZE UNION ADAPTER.
7. PRESSURE GAUGE, LIQUID DAMPENED.
8. BRONZE DISC STYLE CHECK VALVE.
9. MARINE GRADE ALUMINUM ENCLOSURE, HINGED TOP.
10. STRUCTURAL ALUMINUM BASEPLATE.
11. BRASS PIPE, DOUBLE WRAPPED WITH PVC PIPE WRAP
12. BRASS 90 DEG. ELBOW.
13. PVC SCHEDULE 80 MALE ADAPTER.
14. CONCRETE THRUST BLOCKS ____ CUBIC FEET MINIMUM.
15. ___ INCH THICK CONCRETE PAD, ASTM C-94, ACI STD 318-83 MIX, 2500 PSI RATED
16. MAIN POWER CONDUIT. 17. IRRIGATION CONTROLLER SIGNAL CONDUIT.

SECTION VIEW - N.T.S.

X IRRIGATION BOOSTER PUMP

IRRIGATION NOTES

1. ALL LOCAL MUNICIPAL AND STATE LAWS, RULES AND REGULATIONS GOVERNING OR RELATING TO ANY PORTION OF THIS WORK ARE HEREBY INCORPORATED INTO AND MADE A PART OF THESE SPECIFICATIONS AND THEIR PROVISIONS SHALL BE CARRIED OUT BY THE CONTRACTOR.
2. THE CONTRACTOR SHALL VERIFY THE LOCATIONS OF ALL EXISTING UTILITIES, STRUCTURES AND SERVICES BEFORE COMMENCING WORK. THE LOCATIONS OF UTILITIES, STRUCTURES AND SERVICES SHOWN IN THESE PLANS ARE APPROXIMATE ONLY. ANY DISCREPANCIES BETWEEN THESE PLANS AND ACTUAL FIELD CONDITIONS SHALL BE REPORTED TO THE OWNER'S REPRESENTATIVE.
3. THE CONTRACTOR SHALL OBTAIN THE PERTINENT ENGINEERING OR ARCHITECTURAL PLANS BEFORE BEGINNING WORK.
4. THE CONTRACTOR SHALL OBTAIN ALL NECESSARY PERMITS REQUIRED TO PERFORM THE WORK INDICATED HEREIN BEFORE BEGINNING WORK.
5. THIS DESIGN IS DIAGRAMMATIC. ALL EQUIPMENT SHOWN IN PAVED AREAS IS FOR DESIGN CLARITY ONLY AND IS TO BE INSTALLED WITHIN PLANTING AREAS.
6. THE CONTRACTOR SHALL NOT WILLFULLY INSTALL ANY EQUIPMENT AS SHOWN ON THE PLANS WHEN IT IS OBVIOUS IN THE FIELD THAT UNKNOWN CONDITIONS EXIST THAT WERE NOT EVIDENT AT THE TIME THESE PLANS WERE PREPARED. ANY SUCH CONDITIONS SHALL BE BROUGHT TO THE ATTENTION OF THE OWNER'S REPRESENTATIVE PRIOR TO ANY WORK OR THE IRRIGATION CONTRACTOR SHALL ASSUME ALL RESPONSIBILITY FOR ANY FIELD CHANGES DEEMED NECESSARY BY THE OWNER.
7. INSTALL ALL EQUIPMENT AS SHOWN IN THE DETAILS AND SPECIFICATIONS. CONTRACTOR SHALL BE RESPONSIBLE TO COMPLY WITH LOCAL CITY, COUNTY AND STATE REQUIREMENTS FOR BOTH EQUIPMENT AND INSTALLATION.
8. ACTUAL LOCATION FOR THE INSTALLATION OF THE BACKFLOW PREVENTER AND THE AUTOMATIC CONTROLLER IS TO BE DETERMINED IN THE FIELD BY THE OWNER'S AUTHORIZED REPRESENTATIVE.
9. CONTRACTOR IS TO PROVIDE AN ADDITIONAL PILOT WIRE FROM CONTROLLER ALONG ENTIRETY OF MAIN LINE TO THE LAST RCV ON EACH AND EVERY LEG OF MAIN LINE. LABEL SPARE WIRES AT BOTH ENDS.
10. ALL PIPE UNDER PAVED AREAS TO BE INSTALLED IN SLEEVING TWICE THE DIAMETER OF THE PIPE CARRIED. SEE LEGEND FOR TYPE. ALL WIRE UNDER PAVED AREAS TO BE INSTALLED IN A SCH. 40 SLEEVE THE SIZE REQUIRED TO EASILY PULL WIRE THROUGH. ALL SLEEVES TO BE INSTALLED WITH A MINIMUM DEPTH AS SHOWN ON THE SLEEVING DETAILS. SLEEVES TO EXTEND AT LEAST 12" PAST THE EDGE OF THE PAVING.
11. ALL QUICK COUPLER AND REMOTE CONTROL VALVES TO BE INSTALLED IN SHRUB OR GROUND COVER AREAS WHERE POSSIBLE. ALL QUICK COUPLER AND REMOTE CONTROL VALVES TO BE INSTALLED AS SHOWN ON THE INSTALLATION DETAILS. INSTALL ALL QUICK COUPLER AND REMOTE CONTROL VALVES WITHIN 18" OF HARDSCAPE.
12. ALL HEADS ARE TO BE INSTALLED WITH THE NOZZLE, SCREEN AND ARCS SHOWN ON THE PLANS. ALL HEADS ARE TO BE ADJUSTED TO PREVENT OVERSPRAY ONTO BUILDINGS, WALLS, FENCES AND HARDSCAPE. THIS INCLUDES, BUT NOT LIMITED TO, ADJUSTMENT OF DIFFUSER PIN OR ADJUSTMENT SCREW, REPLACEMENT OF PRESSURE COMPENSATING SCREENS, REPLACEMENT OF NOZZLES WITH MORE APPROPRIATE RADIUS UNITS AND THE REPLACEMENT OF NOZZLES WITH ADJUSTABLE ARC UNITS.
13. CONTRACTOR SHALL INSTALL ADDITIONAL CHECK VALVES TO HEADS AND LATERALS AS REQUIRED TO PREVENT LOW HEAD DRAINAGE.
14. THE CONTRACTOR SHALL USE PROPER GROUNDING TECHNIQUES FOR GROUNDING THE CONTROLLER AND RELATED EQUIPMENT PER MANUFACTURERS SPECIFICATIONS. SWEENEY AND ASSOCIATES RECOMMENDS MEASURING FOR PROPER GROUND AT LEAST ONCE ANNUALLY, AND NECESSARY ADJUSTMENTS MADE TO COMPLY WITH MANUFACTURER SPECIFICATIONS.
15. THE CONTRACTOR IS REQUIRED TO CONTACT DIGALERT OR 811 A MINIMUM OF TWO (2) DAYS PRIOR TO THE START OF ANY EXCAVATIONS ON THE PROJECT AND SPECIFICALLY PRIOR TO THE INSTALLATION OF ANY GROUNDING RODS. DIAL 811 OR LOG ONTO WWW.DIGALERT.ORG TO START A PROJECT TICKET. DIGALERT AND 811 IS A FREE SERVICE PROVIDED TO THE PROJECT. FAILURE TO CONTACT AND HAVE THE EXISTING UTILITIES IDENTIFIED, LOCATED AND MARKED SHALL MAKE THE CONTRACTOR SOLELY RESPONSIBLE FOR ANY AND ALL DAMAGES.

VALVE CALLOUT LEGEND

A20	1.5"	35	30
1	S	1.75	1,500

- CONTROLLER LETTER / STATION NUMBER (A20)
- VALVE SIZE IN INCHES (1.5")
- VALVE FLOW RATE IN G.P.M. (35)
- OPERATING PRESSURE (PSI) (30)
- ZONE AREA (SFT) (1,500)
- ZONE PRECIPITATION RATE (IN./HR.) (1.75)
- IRRIGATION METHOD SEE CHART (S)
- HYDROZONE NUMBER SEE CHART (1)

FOR DRIP TUBING ZONES

1,750' TUBING — LENGTH OF DRIP TUBING

HYDROZONE DESCRIPTION CHART

NUMBER	DESCRIPTION OF THE HYDROZONE	WUCOLS	PLANT FACTOR
HZ 1	LOW WATER USE PLANTINGS	L	0.20
HZ 2	MODERATE WATER USE PLANTINGS	M	0.40
HZ 3	MODERATE WATER USE TURF	M	0.60
HZ 4	LOW WATER USE TREES	L	0.20
HZ 5	MODERATE WATER USE TREES	M	0.40

IRRIGATION METHOD DESCRIPTION CHART

LETTERS	DESCRIPTION OF THE IRRIGATION	TYPE	IR. EFFICIENCY
S	SPRAY HEADS	SPRAY	0.75
R	ROTOR HEADS	SPRAY	0.75
DT	DRIP TUBING	DRIP	0.81
TB	TREE BUBBLERS	DRIP	0.81

WATER EFFICIENT LANDSCAPE WORKSHEET (IB2 & STUDENT SERVICE BLDG.)

This worksheet is filled out by the project applicant and it is a required element of the Landscape Documentation Package

sweeney + associates IRRIGATION DESIGN AND CONSULTING

Project Name: Compton College IB2 & Student Services
Project Address: 1111 W. Artesia Blvd. Compton , CA

Reference Evapotranspiration (ETo) 50.1 In./Yr. Residential Project? No

Hydrozone # / Planting Description[a]	Plant Factor	Irrigation Method[b]	Irrigation Efficiency (IE)[c]	ETAF (PF / IE)	Landscape Area (Sq. Ft.)	ETAF x Area	Estimated Total Water Use (ETWU)[d]
Regular Landscape Areas							
1. Low Water Use Plantings	0.20	Drip	0.81	0.25	10,729	2,682	83,316
1. Low Water Use Plantings	0.40	Overhead	0.75	0.54	6,549	3,536	109,850
2. Moderate Water Use Plantings	0.20	Drip	0.81	0.25	4,420	1,105	34,324
2. Moderate Water Use Plantings	0.40	Overhead	0.75	0.54	1,384	747	23,214
4. Low Water Use Trees in DG	0.20	Drip	0.81	0.25	4,905	1,226	38,090
5. Moderate Water Use Trees in DG	0.40	Drip	0.81	0.50	3,121	1,561	48,472
				Totals:	31,108	10,858	
Special Landscape Areas							
3. Active Play Turf				1.00	18,363	18,363	570,392
				Totals:	18,363	18,363	
		Estimated Total Water Use (ETWU) Total:					907,657
		Maximum Applied Water Allowance (MAWA)[e]:					1,005,216

[a] Hydrozone # / Planting Description — *E.g. 1.) Front Lawn 2.) Low Water Use Plantings 3.) Medium Water Use Plantings*
[b] Irrigation Method — *Overhead Spray of Drip*
[c] Irrigation Efficiency — *0.75 for Spray 0.81 for Drip*

[d] ***ETWU (Annual Gallons Required)** = ETo x 0.62 x ETAF x Area*
Where 0.62 is a conversion factor that converts acre-inches/acre/year to gallons/square foot/year.

[e] ***MAWA (Annual Gallons Allowed)** = ETo x 0.62 x [(ETAF x LA) + ((1 - ETAF) x SLA)]*
Where 0.62 is a conversion factor that converts acre-inches/acre/year to gallons/square foot/year, LA is the total landscape area in square feet, SLA is the total special landscape area in square feet, and ETAF is 0.55 for residential projects and 0.45 for non-residential projects.

Evapotranspiration Adjustment Factor (ETAF) Calculations

This non-residential project complies with the WELO and its average ETAF is less than 0.45

Regular Landscape Areas	
Total ETAF x Area	10,858
Total Area	31,108
Average ETAF	**0.35**

All Landscape Areas	
Total ETAF x Area	29,221
Total Area	49,471
Average ETAF	**0.59**

WATER EFFICIENT LANDSCAPE WORKSHEET (IB2 ONLY)

This worksheet is filled out by the project applicant and it is a required element of the Landscape Documentation Package

sweeney + associates IRRIGATION DESIGN AND CONSULTING

Project Name: Compton College IB2
Project Address: 1111 W. Artesia Blvd. Compton , CA

Reference Evapotranspiration (ETo) 50.1 In./Yr. Residential Project? No

Hydrozone # / Planting Description[a]	Plant Factor	Irrigation Method[b]	Irrigation Efficiency (IE)[c]	ETAF (PF / IE)	Landscape Area (Sq. Ft.)	ETAF x Area	Estimated Total Water Use (ETWU)[d]
Regular Landscape Areas							
1. Low Water Use Plantings	0.20	Drip	0.81	0.25	8,303	2,076	64,477
2. Medium Water Use Plantings	0.40	Drip	0.81	0.50	3,238	1,619	50,289
4. Low Water Use Trees	0.20	Drip	0.81	0.25	2,461	615	19,111
5. Medium Water Use Trees	0.40	Drip	0.81	0.50	2,947	1,474	45,770
				Totals:	16,949	5,784	
Special Landscape Areas							
3. Active Play Turf				1.00	16,873	16,873	524,109
				Totals:	16,873	16,873	
		Estimated Total Water Use (ETWU) Total:					703,756
		Maximum Applied Water Allowance (MAWA)[e]:					761,021

[a] Hydrozone # / Planting Description — *E.g. 1.) Front Lawn 2.) Low Water Use Plantings 3.) Medium Water Use Plantings*
[b] Irrigation Method — *Overhead Spray of Drip*
[c] Irrigation Efficiency — *0.75 for Spray 0.81 for Drip*

[d] ***ETWU (Annual Gallons Required)** = ETo x 0.62 x ETAF x Area*
Where 0.62 is a conversion factor that converts acre-inches/acre/year to gallons/square foot/year.

[e] ***MAWA (Annual Gallons Allowed)** = ETo x 0.62 x [(ETAF x LA) + ((1 - ETAF) x SLA)]*
Where 0.62 is a conversion factor that converts acre-inches/acre/year to gallons/square foot/year, LA is the total landscape area in square feet, SLA is the total special landscape area in square feet, and ETAF is 0.55 for residential projects and 0.45 for non-residential projects.

Evapotranspiration Adjustment Factor (ETAF) Calculations

This non-residential project complies with the WELO and its average ETAF is less than 0.45

Regular Landscape Areas	
Total ETAF x Area	5,784
Total Area	16,949
Average ETAF	**0.34**

All Landscape Areas	
Total ETAF x Area	22,657
Total Area	33,822
Average ETAF	**0.67**

IRRIGATION MATERIAL LEGEND

SYMBOL (Q T H F)	MANUFACTURER	MODEL NO. / DESCRIPTION	FLOW RATE (GPM)	PSI	RADIUS	P.R. (TRI.)	DETAIL
	RAIN BIRD	RD-06-S-P30-F 6" POP-UP TURF HEAD WITH AN 15 SERIES HE-VAN NOZZLE	.93, 1.23, 1.85, 3.70	30	15 FT	1.83 IN./HR.	A
8	HUNTER	I-25-04-SS 4" POP-UP LARGE RADIUS TURF ROTOR WITH A S.S. STEM AND A #8 NOZZLE	16.1	40	47 FT	1.64 IN./HR. (Q) 0.82 IN./HR. (H) 0.42 IN./HR. (F)	B
	RAIN BIRD	RD-06-S 6" POP-UP BUBBLER HEAD WITH A HUNTER MSBN-50Q STREAM BUBBLER NOZZLE EACH SYMBOL REPRESENTS TWO (2) BUBBLER TO PROVIDE A TOTAL OF TWO (2) BUBBLERS PER TREE OR PALM. PLACE THE BUBBLER HEADS SIX (6) INCHES FROM THE ROOT BALL OF THE TREE OR PALM AND ON OPPOSITE SIDES OF TREE OR PALM. ADJUST BUBBLER STREAMS TO WET THE ROOT BALL AND ADJACENT AMENDED SOIL WITHOUT HITTING THE TRUNK OF THE TREE OR PALM.	.50 (1.00 TOTAL)	30	1 FT	1.00 IN./HR.	A,C
	RAIN BIRD	XFS-06-12 SUBSURFACE DRIP TUBING (COPPER EXTERIOR COLOR) WITH 0.60 GPH, PRESSURE COMPENSATING EMITTERS INTERNALLY INSTALLED IN THE DRIP TUBING AT 12" O.C. SPACING. DRIP TUBING SHALL BE EQUIPPED WITH COPPER CHIP TECHNOLOGY TO PREVENT ROOT INTRUSION INTO THE DRIP EMITTER. DRIP TUBING SHALL BE INSTALLED 4" BELOW FINISHED SOIL GRADE (NOT COUNTING MULCH) IN SHRUB AREAS AND 6" BELOW DG AREAS, AND IN PARALLEL ROWS A MAXIMUM OF 16" ON CENTER. THE PERIMETER ROW OF DRIP TUBING SHALL BE INSTALLED A MAXIMUM OF 4" FROM THE EDGE OF ANY HARDSCAPE OR TURF EDGE. ALL SUBSEQUENT INTERIOR ROWS SHALL BE ADJUSTED TO PROVIDE AN EVEN SPACING ACROSS THE PLANTER WITHOUT EXCEEDING 16" MAXIMUM SPACING. INSTALL 9" PVC COATED GALVANIZED TUBING STAKES A MAXIMUM OF FIVE (5) FEET ON CENTER ALONG THE LENGTH OF THE TUBING. TUBING STAKES SHALL BE MODEL #GDTS140900 AS MANUFACTURED BY GPH IRRIGATION PRODUCTS (866) 582-9684. THE HATCH PATTERN SYMBOLS ON THE PLANS REPRESENT THE APPROXIMATE DIRECTION AND SPACING OF THE DRIP TUBING ROWS, SEE ACTUAL SPACING REQUIREMENTS ABOVE AND IN DETAILS.					D,E,F
NO SYMBOL	RAIN BIRD	CONNECTION BETWEEN XFS DRIP TUBING AND PVC SUPPLY AND DISCHARGE HEADERS SHALL BE MADE USING XF DRIP LINE BARBED FITTINGS, SCH. 40 PVC THREADED FITTINGS, SCH. 80 NIPPLES AND FLEXIBLE NIPPLES. WHEN THE CONNECTION IS AT THE END RUN OF THE TUBING USE A 1/2" SCH. 40 PVC THREADED 90° ELBOW, A 1/2" X LENGTH AS REQUIRED SCH. 80 PVC THREADED NIPPLE, A 1/2" X 6" MIPT X FIPT FLEXIBLE NIPPLE, AND A XFF-MA-050 17mm BARB X 1/2" MIPT ADAPTER FITTING. WHEN THE CONNECTION IS IN THE MIDDLE OF THE TUBING RUN USE A 1/2" SCH. 40 PVC THREADED TEE FITTING, A 1/2" X LENGTH AS REQUIRED SCH. 80 PVC THREADED NIPPLE, A 1/2" X 6" MIPT X FIPT FLEXIBLE NIPPLE, AND TWO (2) XFF-MA-050 17mm BARB X 1/2" MIPT ADAPTERS. ALL END RUNS OF TUBING SHALL BE CONNECTED WITH A PVC DISCHARGE HEADER. FLEXIBLE NIPPLES SHALL BE MODEL #GFN050600 AS MANUFACTURED BY GPH IRRIGATION PRODUCTS (866) 582-9684.					D,E,F
NO SYMBOL	RAIN BIRD	XF SERIES 17mm BARBED FITTINGS FOR ALL CONNECTIONS BETWEEN DRIP TUBING (TUBING-TO-TUBING ONLY). ALL BARBED DRIP TUBING FITTINGS SHALL BE INSTALLED USING A FITINS-TOOL FOR PROPER INSERTION OF THE FITTING INTO THE TUBING. NO HEATING OF TUBING SHALL BE ALLOWED.					D,E,F
	AS APPROVED	PVC SUPPLY AND DISCHARGE HEADERS SHALL BE PVC LATERAL LINE PIPE (AS SHOWN BELOW), 1" MINIMUM SIZE WITH SCH. 40 PVC FITTINGS.					D,E,F
NO SYMBOL	RAIN BIRD	WHERE VINES ARE PLANTED ON WALLS, FENCES OR COLUMNS WITHIN THE DRIP TUBING ZONES, ADDITIONAL DRIP EMITTERS SHALL BE REQUIRED FOR THESE VINE PLANTINGS. THE CONTRACTOR SHALL INSTALL TWO (2) XB-10PC 1 GPH DRIP EMITTERS PER VINE PLANTING. THESE ADDITIONAL EMITTERS SHALL BE PUNCHED DIRECTLY INTO THE DRIP TUBING. EMITTERS SHALL BE INSTALLED USING A XM-TOOL EMITTER INSTALLATION TOOL. EACH DRIP EMITTER SHALL BE INSTALLED WITH AN 18" LENGTH OF XQ-1/4" DISTRIBUTION TUBING, A TS-025 TUBING STAKE AND A DBC-025 DIFFUSER BUG CAP. LOCATE EMITTER OUTLETS DIRECTLY OVER THE ROOT BALL OF THE VINE PLANTING.					D,E,F
F	GPH IRRIGATION/ RAIN BIRD	GDFN DRIP FLUSH / INDICATOR NOZZLE, ORANGE IN COLOR, INSTALLED ONTO A RAIN BIRD 1812 12" POP-UP SPRINKLER BODY (NO PRS OR CHECK VALVE). THE FLUSH NOZZLE SHALL BE CLOSED FOR NORMAL OPERATION OF THE DRIP SYSTEM.					E,G
A	RAIN BIRD	ARV050 AIR/VACUUM RELIEF VALVE INSTALLED WITH A XFD-TFA-075 BARB X BARB X 3/4" FIPT TEE FITTING AND A AND A 3/4" X 1/2" SCH. 40 PVC THREADED REDUCER BUSHING. INSTALL AIR RELIEF ASSEMBLY AT THE HIGH POINT OF EACH PLANTER. SEE PLANS FOR APPROXIMATE LOCATION AND QUANTITY OF ARV'S PER DRIP ZONE. USING AN AIR RELIEF LATERAL CONSTRUCTED OF XFD "BLANK" XF TUBING, CONNECT AIR RELIEF VALVE TO ALL DRIP LINE LATERALS WITHIN THE ELEVATED AREA. MULTIPLE ARV'S MAY BE REQUIRED PER DRIP TUBING ZONE, SEE PLANS. INSTALL INSIDE A 7" ROUND VALVE BOX.					E,H
B	WILKINS	975XLS, 2" R/P BACK FLOW PREVENTION DEVICE WITH WYE STRAINER, INSTALL WITH BRASS NIPPLES, UNIONS AND FITTINGS, SIZED PER DEVICE					I
NO SYMBOL	V.I.T.	STRONG BOX SBBC-45SS "SMOOTH TOUCH" STAINLESS STEEL BACK FLOW DEVICE ENCLOSURE					I
SM	NETAFIM	WM-200-0.1-ER-P 2" LANDSCAPE WATER SUB-METER. INSTALL INSIDE A STANDARD RECTANGULAR VALVE BOX.					J
P	B.E.P.	BARRETT IRRIGATION BOOSTER PUMP, BEP/65/25/39/230/1/A/1, SEE DETAIL. INSTALL PUMP ASSEMBLY PER THE MANUFACTURER'S RECOMMENDATIONS. CONTACT DARYL GREEN @ GPS (949) 584-7311. THE CONTRACTOR SHALL VERIFY EXISTING DYNAMIC (WATER FLOWING AT DESIGN FLOW) WATER PRESSURE, STATIC (NO WATER MOVEMENT) WATER PRESSURE AND THE ELECTRICAL POWER SUPPLY PRIOR TO ORDERING THE PUMP.					W
M	BUCKNER	3200-200 2" NORMALLY CLOSED, BRASS MASTER CONTROL VALVE. WIRE MCV TO THE CONTROLLER USING A SEPARATE PILOT AND GROUND WIRE, ROUTE INSIDE 1" SCH. 40 (GRAY) ELECTRICAL CONDUIT. INSTALL INSIDE A STANDARD RECTANGULAR VALVE BOX.					K
F	RAIN MASTER	FSB-150 1 1/2" BRASS FLOW SENSOR, WIRE TO CONTROLLER USING TWO (2) #14UF AWG WIRES INSIDE A 1" SCH. 40 PVC (GRAY) ELECTRICAL CONDUIT. INSTALL PER MANUFACTURER'S RECOMMENDATIONS AND INSIDE A STANDARD RECTANGULAR VALVE BOX.					L
	LASCO	V27101N-SC 2 1/2" SLO-CLOSE SCH. 80 PVC, TRUE-UNION BALL VALVE WITH SOLVENT WELD SOCKET CONNECTIONS, LINE SIZE PER MAINLINE. INSTALL INSIDE A 10" ROUND VALVE BOX.					M
	RAIN BIRD	44LRC 1" QUICK COUPLER VALVE WITH LOCKING VINYL COVER AND A LASCO G13S-218 SWING JOINT. INSTALL INSIDE A 10" ROUND VALVE BOX.					N
	RAIN BIRD	XXX-PESB-PRS-D PRESSURE REGULATING, PLASTIC REMOTE CONTROL VALVE (RCV), SIZE AS SHOWN (1" AND 1 1/2" SIZES), SET PRS-D PRESSURE REGULATOR TO PROVIDE THE OPERATING PRESSURE OF THE SPRINKLER / BUBBLER HEAD AT THE HIGHEST OR FARTHEST HEAD ON THE CONTROL VALVE ZONE (MEASURE PSI AT HEAD). INSTALL THE RCV INSIDE A STANDARD RECTANGULAR VALVE BOX.					O
	RAIN BIRD	PLASTIC DRIP REMOTE CONTROL VALVE ASSEMBLY, SIZE AS SHOWN (1" AND 1 1/2" SIZES). COMPLETE WITH PLASTIC CONTROL VALVE, DRIP FILTER AND PRESSURE REGULATION, AS SHOWN BELOW BY SIZE: FOR 1" DRIP ZONES: 100-PESB VALVE AND A PRB-QKCHK-100 PRESSURE REGULATING, 200 MESH BASKET FILTER. IN A STANDARD RECTANGULAR BOX. FOR 1 1/2" DRIP ZONES: XCZ-150-LCDR PESB VALVE, LCRBY-150D, AND A 1 1/2" 40PSI PRESSURE REGULATOR. IN A JUMBO RECTANGULAR BOX.					P
C	RAIN MASTER	EGP48i-PSB EAGLE PLUS 48 STATION CONTROLLER WITH INTERNET COMMUNICATIONS CARD (i CENTRAL),COMPLETE WITH A V.I.T. PRODUCTS SB-16SS 14 GAGE STAINLESS STEEL, TOP ENTRY ENCLOSURE. INSTALL CONTROLLER ENCLOSURE ONTO A V.I.T. QP-16 "QUICK PAD" ENCLOSURE MOUNTING PAD. CONTROLLER IS COMPLETE WITH TWO (2) YEARS OF iCENTRAL INTERNET BASED CENTRAL CONTROL. CONTRACTOR TO REGISTER iCENTRAL SOFTWARE AND FULLY PROGRAM THE CONTROLLER FOR AUTOMATIC PROGRAM ADJUSTMENT WITH RAINMASTER WEATHER DATA DOWNLOAD. CONTRACTOR TO PROVIDE PROOF OF REGISTRATION AND PROGRAMMING TO THE OWNER. IF NECESSARY, PROVIDE AN ANTENNA FOR PROPER COMMUNICATION.					Q
NO SYMBOL	PAIGE ELECTRIC	THE CONTROLLER SHALL BE GROUNDED USING A #182000 5/8" X 8 FOOT COPPER CLAD GROUND ROD, A #182005 CAST BRONZE ROD CLAMP AND THE REQUIRED LENGTH OF #6AWG BARE, SINGLE STRAND COPPER GROUND WIRE. INSTALL INSIDE A 10" ROUND VALVE BOX.					R
R	RAIN MASTER	RS-500 WIRED RAIN SENSOR, MOUNT IN RGVRSS ENCLOSURE ON THE SIDE OF THE CONTROLLER ENCLOSURE, WIRE TO THE CONTROLLER.					N/A
E	N/A	120 VOLT ELECTRICAL POWER FOR CONTROLLER, PROVIDED BY ELECTRICIAN, VERIFY ACTUAL LOCATION IN FIELD					N/A
E1	N/A	230 VOLT (SINGLE/THREE) PHASE ELECTRICAL POWER FOR BOOSTER PUMP SYSTEM, PROVIDED BY ELECTRICIAN, VERIFY ACTUAL LOCATION IN FIELD					N/A
	AS APPROVED	PVC PIPE 3/4" - 2" SCH. 40, SOLVENT WELD WITH SCH. 40 PVC FITTINGS, AS LATERAL LINES INSTALLED 12" BELOW FINISHED GRADE					S
	AS APPROVED	PVC PIPE 2 1/2" CL. 315, SOLVENT WELD WITH SCH. 80 PVC FITTINGS, AS MAINLINES INSTALLED 18" BELOW FINISHED GRADE					S,U
	AS APPROVED	PVC PIPE SCH. 40 AS SLEEVING, 2 TIMES THE DIAMETER OF PIPE OR WIRE BUNDLE CARRIED (2" MINIMUM SIZE) INSTALL ALL PIPE AND WIRE UNDER PAVING, HARDSCAPE, ETC. (OR AS DIRECTED BY OWNER'S AUTHORIZED REPRESENTATIVE) INSIDE SLEEVES. SLEEVES UNDER PEDESTRIAN PAVING SHALL BE INSTALLED 24" BELOW FINISHED GRADE. SLEEVES UNDER VEHICULAR PAVING SHALL BE INSTALLED 36" BELOW FINISHED GRADE.					T
NO SYMBOL	LASCO	ALL FITTINGS USED WITH SOLVENT WELD MAINLINE PIPE SHALL BE SCH. 80 PVC FITTINGS, GRAY IN COLOR, AND SIZED TO MATCH THE MAINLINE PIPE. ALL FITTINGS USED WITH SOLVENT WELD LATERAL LINE PIPE SHALL BE SCH. 40 PVC, WHITE IN COLOR, AND SIZED TO MATCH THE LATERAL LINE PIPE. ALL THREADED PVC NIPPLES SHALL BE SCH. 80 PVC PIPE, DARK GRAY IN COLOR, WITH MOLDED THREADS.					N/A
NO SYMBOL	AS APPROVED	ALL SOLVENT WELD CONNECTIONS FOR BOTH MAINLINE AND LATERAL LINE SHALL BE MADE USING THE TWO-STEP PROCESS OF PRIMER AND SOLVENT CEMENT. PRIMER SHALL BE LOW VOC "PURPLE PRIMER". MAINLINE SOLVENT CEMENT SHALL BE LOW VOC, "GRAY-HEAVY BODY" CEMENT. LATERAL LINE SOLVENT CEMENT SHALL BE LOW VOC, GRAY OR BLUE COLORED MEDIUM BODIED CEMENT. USE DAUBERS SIZED AT LEAST ONE-HALF THE SIZE OF THE LARGEST PIPE BEING JOINED. ALL SOLVENT CEMENTED JOINTS SHALL BE MADE PER THE PIPE AND FITTING MANUFACTURER'S RECOMMENDATIONS.					N/A
NO SYMBOL	AS APPROVED	ALL SOLVENT WELD MAINLINES ABOVE 2" IN SIZE SHALL HAVE CONCRETE THRUST BLOCKING INSTALLED AT ALL DIRECTIONAL CHANGES INCLUDING ELBOWS (45° AND 90°) AND TEES. MAINLINE PIPES UNDER 2" SIZE AND ALL LATERAL LINES DO NOT REQUIRE THRUST BLOCKING.					U
NO SYMBOL	AS APPROVED	1" SCH. 40 PVC, GRAY ELECTRICAL CONDUIT FOR FLOW SENSOR / MASTER VALVE WIRES, PROVIDE PULL BOX AT A MAXIMUM OF 200 FEET ON CENTER FOR A 3 FOOT WIRE LOOP OR ANY SPLICES. INSTALL INSIDE A STANDARD RECTANGULAR VALVE BOX.					N/A
NO SYMBOL	PAIGE ELECTRIC	P7079D POLYETHYLENE INSULATED, SOLID COPPER CONDUCTOR IRRIGATION CONTROL WIRE #14UF AWG DIRECT BURIAL (U.L. APPROVED). PILOT WIRES SHALL BE RED IN COLOR, COMMON GROUND WIRE SHALL BE WHITE IN COLOR, SPARE WIRES SHALL BE YELLOW IN COLOR. WHERE MULTIPLE CONTROLLERS ARE USED ON THE PROJECT, EACH CONTROLLER SHALL HAVE A DIFFERENT COLOR FOR PILOT WIRES. THE CONTRACTOR SHALL ROUTE TWO (2) SPARE CONTROL WIRES (YELLOW) FROM THE CONTROLLER ALONG THE MAINLINE IN ALL DIRECTIONS AWAY FROM THE CONTROLLER. LOOP SPARE WIRES UP AND INTO EACH VALVE BOX ALONG THE MAINLINE, PROVIDING A 3 FOOT MINIMUM LOOP.					S,T,V
NO SYMBOL	GPH IRRIGATION	GDBRY6 DIRECT BURIAL, 100% SILICONE GEL, WATER-PROOF WIRE CONNECTORS FOR USE ON ALL WIRE SPLICES AND CONNECTIONS					V
NO SYMBOL	NDS (K.B.I.)	KSC-XXX-S SWING CHECK VALVE, LATERAL LINE SIZE, INSTALL ONE (1) ON THE DOWNSTREAM SIDE OF EACH RCV WHEN THE RCV IS LOWER THAN THE SPRINKLERS, BUBBLERS OR DRIP EMITTERS. INSTALL WITHIN SPRINKLER / BUBBLER / DRIP ZONES AS REQUIRED TO PREVENT LOW HEAD DRAINAGE.					N/A
NO SYMBOL	NDS (K.B.I.)	KC-XXX-S SPRING CHECK VALVE, LATERAL LINE SIZE, INSTALL ONE (1) ON THE DOWNSTREAM SIDE OF EACH RCV WHEN THE RCV IS HIGHER THAN THE SPRINKLERS, BUBBLERS OR DRIP EMITTERS. INSTALL WITHIN SPRINKLER / BUBBLER / DRIP ZONES AS REQUIRED TO PREVENT LOW HEAD DRAINAGE.					N/A
NO SYMBOL	RAIN BIRD	ALL VALVE BOXES SHALL BE VB SERIES, PLASTIC TYPE WITH OVERLAPPING LIDS. VALVE BOX BODIES SHALL BE BLACK IN COLOR. LIDS FOR BOXES IN TURF AREAS SHALL BE GREEN. LIDS FOR VALVE BOXES IN SHRUB AREAS SHALL BE BLACK. ALL BOXES SHALL BE SECURED WITH A RAIN BIRD VB-LOCK-P PENTA HEAD BOLT, WASHER AND CLIP. BOXES SHALL BE AS SHOWN BELOW:					W

DESCRIPTION	TURF AREAS (GREEN LIDS)	SHRUB AREAS (BLACK BOXES AND LIDS)
10" ROUND BOXES	VB-10RND	VB-10RNDB (BOX) AND VB-10RNDBKL (LID)
STANDARD RECTANGULAR BOXES	VB-STD	VB-STDB (BOX) AND VB-STDBKL (LID)
JUMBO RECTANGULAR BOXES	VB-JMB	VB-JMBB (BOX) AND VB-JMBBKL (LID)

IRRIGATION CONTROLLER SCHEDULE INCLUDES COMBINED VALVES FROM IB2 AND STUDENT SERVICE BLDG

IRRIGATION CONTROLLER RUN TIMES

POC or Controller: A

	JAN	FEB	MAR	APR	MAY	JUN	JUL	AUG	SEP	OCT	NOV	DEC	Total / Avg.
ETo / Month (Inches):	2.20	2.70	3.70	4.70	5.50	5.80	6.20	5.90	5.00	3.90	2.60	1.90	50.10
ETo / Day (Inches):	0.07	0.10	0.12	0.16	0.18	0.19	0.20	0.19	0.17	0.13	0.09	0.06	0.14
Irrigation Days / Week:	2	2	3	3	5	5	6	6	5	3	2	2	

Plant / Irrig. Type	AKc	Pr Rate	IE	JAN	FEB	MAR	APR	MAY	JUN	JUL	AUG	SEP	OCT	NOV	DEC	
Low Shrubs	0.20	0.79	0.81	4.7	6.3	5.2	6.9	4.7	5.1	4.4	4.2	4.4	5.5	5.7	4.0	Min./Day/Zone
Drip Tubing	Number of Zones:		8	37.3	50.6	41.8	54.8	37.3	40.6	35.0	33.3	35.0	44.0	45.5	32.2	Total Min./Day
Low Shrubs	0.20	0.70	0.75	5.7	7.7	6.4	8.4	5.7	6.2	5.3	5.1	5.3	6.7	6.9	4.9	Min./Day/Zone
Rotary Heads	Number of Zones:		2	11.4	15.4	12.7	16.7	11.4	12.4	10.7	10.2	10.7	13.4	13.9	9.8	Total Min./Day
Moderate Shrubs	0.40	0.79	0.81	9.3	12.7	10.4	13.7	9.3	10.2	8.8	8.3	8.8	11.0	11.4	8.0	Min./Day/Zone
Drip Tubing	Number of Zones:		4	37.3	50.6	41.8	54.8	37.3	40.6	35.0	33.3	35.0	44.0	45.5	32.2	Total Min./Day
Moderate Shrubs	0.70	1.83	0.81	7.0	9.6	7.9	10.4	7.0	7.7	6.6	6.3	6.6	8.3	8.6	6.1	Min./Day/Zone
Sprays	Number of Zones:		4	28.2	38.3	31.6	41.4	28.2	30.7	26.4	25.2	26.4	33.3	34.4	24.3	Total Min./Day
Moderate Shrubs	0.40	0.70	0.75	11.4	15.4	12.7	16.7	11.4	12.4	10.7	10.2	10.7	13.4	13.9	9.8	Min./Day/Zone
Rotary Heads	Number of Zones:		1	11.4	15.4	12.7	16.7	11.4	12.4	10.7	10.2	10.7	13.4	13.9	9.8	Total Min./Day
Moderate Turf	0.70	1.64	0.75	8.5	11.5	9.5	12.5	8.5	9.2	8.0	7.6	8.0	10.0	10.4	7.3	Min./Day/Zone
Rotors	Number of Zones:		4	33.9	46.1	38.0	49.9	33.9	37.0	31.9	30.3	31.9	40.1	41.4	29.3	Total Min./Day
Moderate Turf	0.70	0.70	0.75	19.9	27.0	22.3	29.2	19.9	21.7	18.7	17.8	18.7	23.5	24.3	17.2	Min./Day/Zone
Rotary Heads	Number of Zones:		1	19.9	27.0	22.3	29.2	19.9	21.7	18.7	17.8	18.7	23.5	24.3	17.2	Total Min./Day
Low Trees in DG	0.20	0.79	0.81	4.7	6.3	5.2	6.9	4.7	5.1	4.4	4.2	4.4	5.5	5.7	4.0	Min./Day/Zone
Drip Tubing	Number of Zones:		3	14.0	19.0	15.7	20.6	14.0	15.2	13.1	12.5	13.1	16.5	17.1	12.1	Total Min./Day
Moderate Trees in DG	0.40	0.79	0.81	9.3	12.7	10.4	13.7	9.3	10.2	8.8	8.3	8.8	11.0	11.4	8.0	Min./Day/Zone
Drip Tubing	Number of Zones:		2	18.6	25.3	20.9	27.4	18.6	20.3	17.5	16.7	17.5	22.0	22.8	16.1	Total Min./Day
Low Trees	0.20	1.00	0.75	4.0	5.4	4.5	5.8	4.0	4.3	3.7	3.6	3.7	4.7	4.9	3.4	Min./Day/Zone
Bubblers	Number of Zones:		3	11.9	16.2	13.4	17.5	11.9	13.0	11.2	10.7	11.2	14.1	14.6	10.3	Total Min./Day
Moderate Trees	0.40	1.00	0.75	7.9	10.8	8.9	11.7	7.9	8.7	7.5	7.1	7.5	9.4	9.7	6.9	Min./Day/Zone
Bubblers	Number of Zones:		3	23.8	32.4	26.7	35.1	23.8	26.0	22.4	21.3	22.4	28.2	29.1	20.6	Total Min./Day
Total Number of Zones:			35	248	336	278	364	248	270	233	221	233	293	302	214	Total Min./Day
Total Controller Run Time in Hours:				4.13	5.61	4.63	6.07	4.13	4.50	3.88	3.69	3.88	4.88	5.04	3.56	Total Hrs./Day
				JAN	FEB	MAR	APR	MAY	JUN	JUL	AUG	SEP	OCT	NOV	DEC	

Note: These schedules are intended only for compliance with local municipal codes and the water efficient landscape ordinance. These calculations represent the MAXIMUM REASONABLE run times and are used to ensure that all irrigation may be completed during the specific watering window allowed. These schedules do not include rainfall, site soil types, specicic exposures (shade versus sun), actual irrigation days, or specific slope position. It is solely the responsibility of the irrigation contractor to program the controller as required to apply the correct amount of irrigation water for the landscape. All smart controllers shall be programmed using the specified ET or weather sensing equipment, satellite provided ET data, soil moisture sensors, and rain shut off devices as required. Contractor shall provide a controller schedule inside the controller cabinet prior to final turnover of the project to the owner.

I AGREE TO COMPLY WITH THE REQUIREMENTS OF THE WATER EFFICIENT LANDSCAPE ORDINANCE AND SUBMIT A COMPLETE LANDSCAPE DOCUMENTATION PACKAGE

SIGNATURE: DATE: 04-08-2019

I HAVE COMPLIED WITH THE CRITERIA OF THE ORDINANCE AND APPLIED THEM FOR THE EFFICIENT USE OF WATER IN THE LANDSCAPE DESIGN PLANS.

811

sweeney + associates
IRRIGATION DESIGN AND CONSULTING
38730 Sky Canyon Drive, Suite C
Murrieta, Ca 92563
e: info@sweeneyassoc.com | t: (951) 461-6830
w: www.sweeneyassoc.com | f: (951) 461-6850

IDENTIFICATION STAMP
DIV. OF THE STATE ARCHITECT
APP. 03-119458 INC:
REVIEWED FOR
SS ☑ FLS ☑ ACS ☑
DATE:05/23/2019

DIVISION OF STATE ARCHITECT
355 South Grand Avenue, Suite 2100
Los Angeles, California. 90012
ph: (213) 897-3995 Fax: (213) 897-3159
agency

tBP
architecture planning interiors
tBP/Architecture
4611 Teller Avenue
Newport Beach, CA 92660
ph: 949.673.0300 fx: 949.732.3895
architect

AHBE
LANDSCAPE ARCHITECTS
617 WEST SEVENTH STREET
SUITE 304
LOS ANGELES, CA 90017
T: 213.694.3800 F: 213.694.3801
LICENSED LANDSCAPE ARCHITECT
CALVIN R. ABE
STATE OF CALIFORNIA
consultant

COMPTON COLLEGE
INSTRUCTIONAL BUILDING No. 2
COMPTON COMMUNITY COLLEGE DISTRICT
1111 E. ARTESIA BLVD. COMPTON, CA.
owner

tBP project number : 20998.00
file name:
drawn by: checked by:
date: 04/08/19
Rev: date: description:

THIS DRAWING AND THE DESIGNS, DEPICTIONS, IDEAS AND OTHER INFORMATION CONTAINED HEREIN CONSTITUTE UNPUBLISHED WORK OF tBP/ARCHITECTURE AND SHALL REMAIN THE PROPERTY OF tBP/ARCHITECTURE IN PERPETUITY. NO PART THEREOF SHALL BE REPRODUCED, DISCLOSED, DISTRIBUTED, SOLD, PUBLISHED OR OTHERWISE USED IN ANY WAY WITHOUT THE ADVANCED EXPRESS WRITTEN CONSENT OF tBP/ARCHITECTURE.

drawing title:
Irrigation Legend and Notes

drawing no.:
L2.00
drawing of

EXISTING IRRIGATION NOTES

NOTE 1:
CONTRACTOR SHALL MAINTAIN EXISTING MAINLINES IN WORKING ORDER. COORDINATE ALL INTERRUPTIONS OF OPERATION OF THE EXISTING IRRIGATION TO A MINIMUM. COORDINATE ALL INTERRUPTIONS WITH THE OWNER'S REPRESENTATIVE.

NOTE 2:
CONTRACTOR SHALL BE RESPONSIBLE FOR ALL EXISTING IRRIGATION EQUIPMENT DAMAGED DURING CONSTRUCTION AND IF DAMAGED, SHALL REPLACE WITH SAME MANUFACTURER AND MODEL.

NOTE 3:
ANY EXISTING IRRIGATION CONTROL VALVES CONNECTED TO EXISTING CONTROLLER SHALL BE RECONNECTED TO EXISTING CONTROLLER. CONFIRM PROPER CONTROLLER OPERATION AND INSTALLATION WITH OWNER'S AUTHORIZED REPRESENTATIVE PRIOR TO STARTING WORK AND UPON COMPLETION OF WORK.

NOTE 4:
CONTRACTOR SHALL CONFIRM THE EXISTING CONTROLLER MAKE AND MODEL AND SHALL CONFIRM THAT SAID CONTROLLER HAS ADEQUATE OPEN STATIONS TO OPERATE ANY ADJUSTED AND ALL PROPOSED IRRIGATION SYSTEM MODIFICATIONS. NOTIFY OWNER'S AUTHORIZED REPRESENTATIVE SHOULD ANY DISCREPANCIES BE NOTED.

NOTE 5:
CONTRACTOR SHALL BE RESPONSIBLE FOR REPAIR/MODIFICATION/REROUTING OF ALL ADJACENT IRRIGATION SYSTEM EQUIPMENT THAT IS AFFECTED BY NEW CONSTRUCTION IMPROVEMENTS. CONTRACTOR SHALL REPAIR SAID SYSTEMS TO A LIKE NEW MANNER, PROVIDING NO LESS THAN 100% OF HEAD RADIUS COVERAGE IN ALL AREAS WITH SYSTEM LAYOUT AS APPROVED BY OWNER'S AUTHORIZED REPRESENTATIVE. CONTRACTOR SHALL CONFIRM ALL AREAS REQUIRING MODIFICATION WITH OWNER'S AUTHORIZED REPRESENTATIVE PRIOR TO BIDDING WORK AND PRIOR TO STARTING WORK.

NOTE 6:
CONTRACTOR SHALL BE RESPONSIBLE FOR THE COMPLETE REMOVAL AND DISPOSAL OF ALL EXISTING IRRIGATION EQUIPMENT AFFECTED BY THE NEW CONSTRUCTION IMPROVEMENTS, IF NECESSARY. CONTRACTOR SHALL VERIFY ALL EQUIPMENT TO BE REMOVED AND DISPOSED OF IN FIELD PRIOR TO BIDDING WORK AND PRIOR TO STARTING WORK.

NOTE 7:
CONTRACTOR SHALL FIELD VERIFY DEPTH AND LOCATION OF ALL EXISTING UTILITIES PRIOR TO BIDDING WORK AND AGAIN PRIOR TO STARTING WORK. VERIFICATION SHALL BE DOCUMENTED AND DELIVERED TO OWNER'S REPRESENTATIVE.

NOTE 8:
CONTRACTOR SHALL BE RESPONSIBLE FOR THE PLACEMENT OF ALL SCH 40 PVC SLEEVING UNDER PAVING, WALLS AND CURBS AT NO LESS THAN 24" BELOW GRADE AND NO LESS THAN 2X DIAMETER OF IRRIGATION PIPE IN AREAS WHERE PIPE CROSSING WILL OCCUR. WHEN PIPE SIZE IS NOT AVAILABLE USE 6" SLEEVING MATERIAL. CONFIRM CROSSINGS WITH OWNER'S REPRESENTATIVE PRIOR TO PAVING AND HARDSCAPE CONSTRUCTION.

NOTE 9:
EXISTING IRRIGATION IN THIS AREA SHALL BE PROTECTED IN PLACE FOR CONTINUED USE. CONTRACTOR SHALL VERIFY THE EXTENT OF THE EXISTING SYSTEM AND MAKE ADJUSTMENTS TO CAP OFF OR MODIFY THE EXISTING SYSTEM TO MEET THE NEW LANDSCAPE CONDITION IF NECESSARY.

NOTE 10:
CONTRACTOR SHALL EXERCISE EXTREME CAUTION WHEN WORKING WITHIN THE DRIPLINE OF EXISTING TREES. NO MECHANICAL TRENCHING WITHIN THE DRIPLINE OF THE EXISTING TREE WILL BE ALLOWED. AIR SPADE SHALL BE UTILIZED FOR ALL TRENCHING WITHIN THE DRIPLINE OF TREES. CONTRACTOR SHALL REFER TO ARBORIST REPORT FOR ADDITIONAL PRECAUTIONS REQUIRED FOR THE EXISTING TREES. VERIFY ALL LAYOUT IN FIELD WITH OWNER'S AUTHORIZED REPRESENTATIVE.

NOTE A:
POINT OF CONNECTION (POC) #1 SHALL BE A 2 1/2" DOMESTIC IRRIGATION MAINLINE STUB-OUT, PROVIDED BY OTHERS. THE CONTRACTOR SHALL VERIFY THE ACTUAL LOCATION, WATER TYPE, METER SIZE AND WATER PRESSURE IN THE FIELD PRIOR TO STARTING WORK. MEASUREMENT OF THE STATIC (NO WATER MOVING) WATER PRESSURE IS ACCEPTABLE FOR POTABLE WATER SYSTEMS WHERE NO PUMP HAS BEEN INDICATED ON THESE PLANS. WHEN USING RECYCLED WATER, OR ON POTABLE WATER SYSTEMS REQUIRING A PUMP, ONLY THE MEASUREMENT OF DYNAMIC (WATER MOVING THROUGH THE METER) WATER PRESSURE, SHALL BE ACCEPTABLE. THE DYNAMIC WATER PRESSURE SHALL BE MEASURED AT THE MAXIMUM SYSTEM DEMAND AS INDICATED BELOW. IF ANY OF THE POC INFORMATION SHOWN ON THESE DRAWING IS FOUND TO BE DIFFERENT THAN THE ACTUAL POC INFORMATION GATHERED IN THE FIELD, IMMEDIATELY NOTIFY THE LANDSCAPE ARCHITECT AND IRRIGATION CONSULTANT. SHOULD THE CONTRACTOR FAIL TO VERIFY THE POC INFORMATION AS SHOWN HEREIN, ANY CHANGES REQUIRED BY LOW PRESSURE OR VOLUME SHALL BE THE SOLE RESPONSIBILITY OF THE CONTRACTOR.

WATER PRESSURE AT POC:	65	PSI (STATIC / DYNAMIC)
DESIGN WATER PRESSURE:	68	PSI
MAXIMUM SYSTEM DEMAND:	39	GPM
PRESSURE BOOST REQUIRED:	25	PSI

NOTE B:
CONTROLLER "A" SHALL BE OF THE BRAND, MODEL AND STATION SIZE AS INDICATED ON THE IRRIGATION MATERIALS LEGEND. THE CONTROLLER SHALL BE INSTALLED IN THE APPROXIMATE LOCATION SHOWN. THE CONTRACTOR SHALL COORDINATE THE REQUIRED ELECTRICAL POWER SUPPLY AT THIS LOCATION WITH THE OWNER'S AUTHORIZED REPRESENTATIVE. FINAL LOCATION OF CONTROLLER AND ELECTRICAL POINT OF CONNECTION SHALL BE CONFIRMED WITH OWNER'S AUTHORIZED REPRESENTATIVE PRIOR TO STARTING WORK.

NOTE C:
THESE PLANS ARE DIAGRAMMATIC, THE MAINLINE AND RELATED IRRIGATION EQUIPMENT IS SHOWN WITHIN THE PAVING FOR CLARITY ONLY. THE ACTUAL LOCATION OF MAINLINE AND RELATED IRRIGATION EQUIPMENT SHALL BE WITHIN PLANTER AND A MINIMUM OF 18" OFF ADJACENT HARDSCAPE AND OTHER OBSTACLES, TYPICAL.

NOTE D:
CONTRACTOR SHALL ADJUST ALL HEADS AS REQUIRED TO ACCOMMODATE ANY VERTICAL OBSTRUCTIONS THAT MAY OCCUR IN THE LANDSCAPE, INCLUDING BUT NOT LIMITED TO LIGHT POLES, FIRE HYDRANTS, TREES, ETC. WHEN A SLIGHT RELOCATION OF THE HEAD IS NOT SUFFICIENT TO CLEAR THE OBSTACLE, OR IF IT NEGATIVELY AFFECTS THE COVERAGE, AN ADDITIONAL HEAD SHALL BE INSTALLED TO PLACE ONE HEAD ON EITHER SIDE OF THE OBSTACLE. THE NOZZLES OF THESE TWO HEADS SHALL HAVE ARC PATTERNS THAT ADD UP TO THE ORIGINAL ARC PATTERN OF THE HEAD INDICATED ON THE PLANS. THE CONTRACTOR SHALL VERIFY ALL HEAD LAYOUT WITH OWNER'S AUTHORIZED REPRESENTATIVE PRIOR TO STARTING WORK.

NOTE E:
THESE PLANS ARE DIAGRAMMATIC, TREE BUBBLERS AND LATERAL LINES ARE SHOWN WITHIN THE PAVING FOR CLARITY ONLY, THE ACTUAL LOCATIONS SHALL BE WITHIN THE PLANTER. THE TREE BUBBLERS SHALL BE ALIGNED WITH TREES AS SHOWN ON THE PLANTING PLANS, AND AS DIRECTED BY OWNER'S AUTHORIZED REPRESENTATIVE. THE CONTRACTOR SHALL CONFIRM ALL LAYOUT IN FIELD WITH OWNER'S AUTHORIZED REPRESENTATIVE PRIOR TO STARTING WORK.

NOTE F:
PRIOR TO START OF CONSTRUCTION THE CONTRACTOR SHALL SUBMIT TO THE OWNER AND LANDSCAPE ARCHITECT A SCALED SHOP DRAWING INDICATING THE PROPOSED LOCATIONS FOR THE IRRIGATION EQUIPMENT LISTED BELOW. THE SHOP DRAWING SHALL BE PREPARED TO THE SATISFACTION OF THE OWNER AND LANDSCAPE ARCHITECT. SHOP DRAWINGS MUST INCLUDE THE PROPOSED LOCATIONS FOR THE FOLLOWING ITEMS:

1. POINT OF CONNECTION (INCLUDING WATER POC, BACK FLOW DEVICES, MASTER CONTROL VALVES, FLOW SENSORS, ETC.)
2. ISOLATION VALVES
3. AUTOMATIC CONTROL VALVES (INDICATE STATION NUMBER)
4. QUICK COUPLING VALVES
5. IRRIGATION CONTROLLER(S)
7. RELATED EQUIPMENT (AS MAY BE DIRECTED).

EACH PIECE OF AFOREMENTIONED EQUIPMENT SHALL HAVE ITS PROPOSED INSTALLED LOCATION SHOWN ON THE SHOP DRAWINGS. THE SYMBOL FOR EACH PRODUCT SHALL BE A SCALED REPRESENTATION OF THE FOOTPRINT OF THE EQUIPMENT OR THE VALVE BOX IN WHICH THE EQUIPMENT IS INSTALLED. CONTRACTOR SHALL INSTALL ALL VALVE BOXES AND RELATED EQUIPMENT PER THE OWNER APPROVED SHOP DRAWINGS. ONCE THE SHOP DRAWING LOCATIONS ARE APPROVED, THE LANDSCAPE ARCHITECT OR OWNER'S AUTHORIZED REPRESENTATIVE WILL ALLOW NO ADJUSTMENTS TO THE APPROVED VALVE BOX PLACEMENT WITHOUT PRIOR WRITTEN ACCEPTANCE. ANY IRRIGATION EQUIPMENT INSTALLED WITHOUT PRIOR APPROVAL WITH SHOP DRAWINGS WILL BE SUBJECT TO RELOCATION BASED ON DIRECTION BY THE LANDSCAPE ARCHITECT AT THE CONTRACTOR'S EXPENSE.

WATER PRESSURE LOSS CALCULATIONS

WATER METER NUMBER		WATER METER SIZE (inches)	
HYDRAULIC GRADE LINE (FT)		WATER METER ELEVATION (FT)	
ELEVATION DIFFERENCE (FT)		STATIC PRESSURE (PSI)	65.0
REMOTE CONTROL VALVE #	A23	REMOTE CONTROL VALVE SIZE (In.)	1.50
R.C.V. DEMAND (GPM)	38.5	TOTAL DEMAND (GPM)	38.5
HIGHEST HEAD SERVED (FT)		STATIC PRESSURE AT HIGHEST HEAD	

sweeney + associates IRRIGATION DESIGN AND CONSULTING

PRESSURE LOSS CALCULATION IS PROVIDED FOR THIS PROJECT BY SWEENEY & ASSOCIATES, INC. UNAUTHORIZED USE BY ANY OTHER PERSON, COMPANY OR PROJECT IS FORBIDDEN WITHOUT WRITTEN PERMISSION.

SIZE (Inches)	DESCRIPTION	FLOW	#	LOSS	
2.00	BACKFLOW PREVENTER (R/P TYPE)	38.5	3	13.25	PSI
2.00	FILTRATION (WYE FILTER)	38.5	4	0.20	PSI
2.00	SUB METER	38.5	5	0.25	PSI
2.00	BFD ASSEMBLY PIPING (BRASS W/ 4 ELLS)	38.5	6	0.99	PSI
1.50	MASTER CONTROL VALVE	38.5	7	0.53	PSI
1.50	FLOW SENSOR	38.5	8	0.40	PSI
2.50	ISOLATION VALVES (BALL TYPE)	38.5	9	1.00	PSI
2.50	500 FEET OF MAINLINE: CL 315 PVC	38.5	10	3.25	PSI
2.50	4 - 90 DEGREE ELBOWS	38.5	13	0.29	PSI
1.50	REMOTE CONTROL VALVE ASSEMBLY	38.5	14	2.68	PSI
10%	LATERAL LINE LOSSES	38.5	15	4.00	PSI
20%	FITTING LOSS (IN ADDITION TO ELBOWS SHOWN)	N/A	16	0.65	PSI
0.00	ELEVATION CHANGE (P.O.C. TO HIGHEST HEAD)	N/A	17	0.00	PSI
TOTAL SYSTEM PRESSURE LOSS (SUM OF #1 THRU #17)			18	27.5	PSI
PRESSURE REQUIRED AT HEAD (OPERATING PRESSURE)			19	40.0	PSI
TOTAL PRESSURE REQUIRED (SUM OF # 8 AND #19)			20	67.5	PSI
STATIC WATER PRESSURE (FROM ABOVE)			21	65.0	PSI
RESIDUAL PRESSURE (SUBTRACT #20 FROM #21)			22	-2.5	PSI
SET PRV OR MCV AT (#20 PLUS 10 PSI)			23	N/A	PSI
PRESSURE BOOST, IF REQUIRED (SET TO ACHIEVE 20 PSI RESIDUAL)			24	22.5	PSI

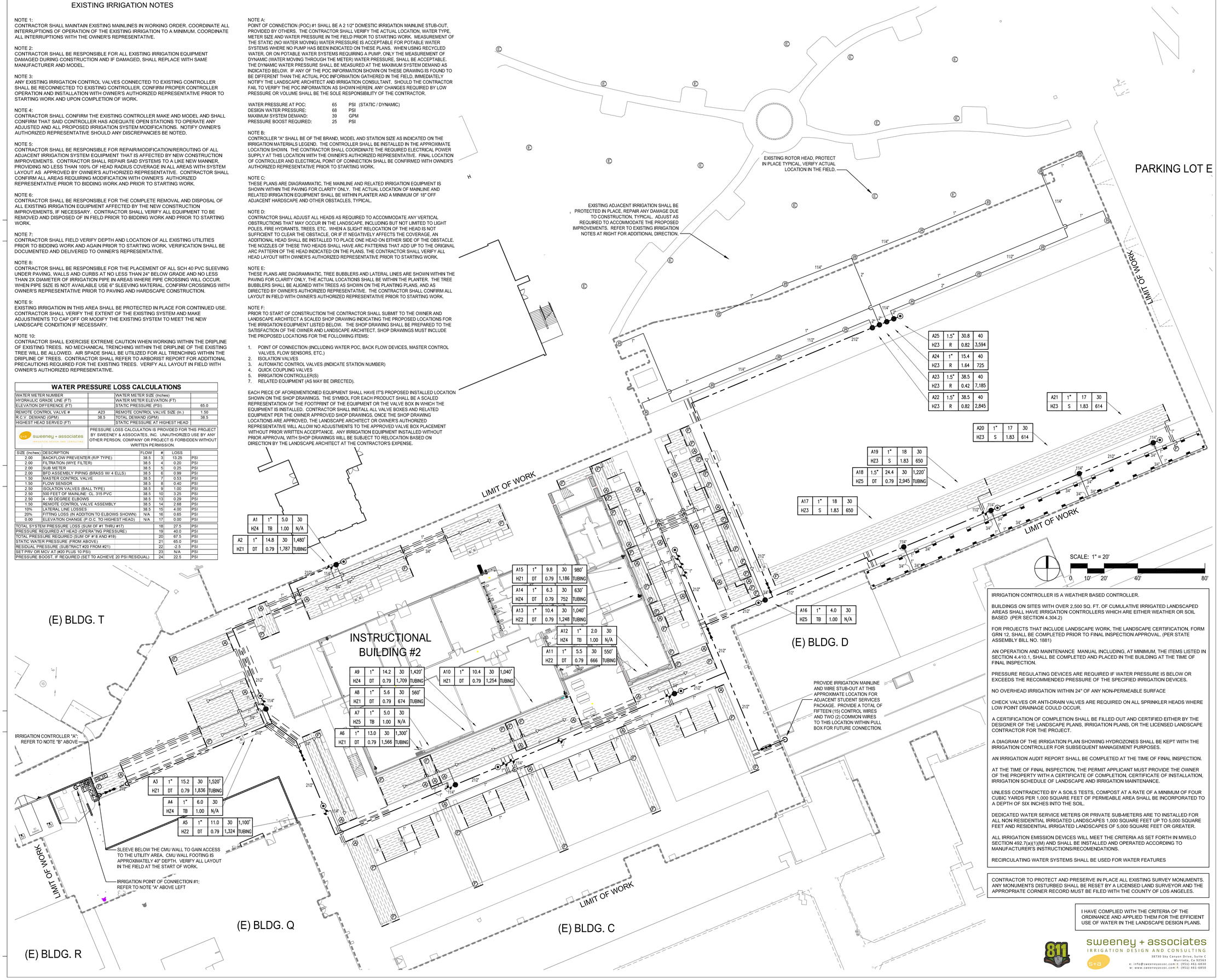

IRRIGATION CONTROLLER IS A WEATHER BASED CONTROLLER.

BUILDINGS ON SITES WITH OVER 2,500 SQ. FT. OF CUMULATIVE IRRIGATED LANDSCAPED AREAS SHALL HAVE IRRIGATION CONTROLLERS WHICH ARE EITHER WEATHER OR SOIL BASED (PER SECTION 4.304.2)

FOR PROJECTS THAT INCLUDE LANDSCAPE WORK, THE LANDSCAPE CERTIFICATION, FORM GRN 12, SHALL BE COMPLETED PRIOR TO FINAL INSPECTION APPROVAL. (PER STATE ASSEMBLY BILL NO. 1881)

AN OPERATION AND MAINTENANCE MANUAL INCLUDING, AT MINIMUM, THE ITEMS LISTED IN SECTION 4.410.1, SHALL BE COMPLETED AND PLACED IN THE BUILDING AT THE TIME OF FINAL INSPECTION.

PRESSURE REGULATING DEVICES ARE REQUIRED IF WATER PRESSURE IS BELOW OR EXCEEDS THE RECOMMENDED PRESSURE OF THE SPECIFIED IRRIGATION DEVICES.

NO OVERHEAD IRRIGATION WITHIN 24" OF ANY NON-PERMEABLE SURFACE

CHECK VALVES OR ANTI-DRAIN VALVES ARE REQUIRED ON ALL SPRINKLER HEADS WHERE LOW POINT DRAINAGE COULD OCCUR.

A CERTIFICATION OF COMPLETION SHALL BE FILLED OUT AND CERTIFIED EITHER BY THE DESIGNER OF THE LANDSCAPE PLANS, IRRIGATION PLANS, OR THE LICENSED LANDSCAPE CONTRACTOR FOR THE PROJECT.

A DIAGRAM OF THE IRRIGATION PLAN SHOWING HYDROZONES SHALL BE KEPT WITH THE IRRIGATION CONTROLLER FOR SUBSEQUENT MANAGEMENT PURPOSES.

AN IRRIGATION AUDIT REPORT SHALL BE COMPLETED AT THE TIME OF FINAL INSPECTION.

AT THE TIME OF FINAL INSPECTION, THE PERMIT APPLICANT MUST PROVIDE THE OWNER OF THE PROPERTY WITH A CERTIFICATE OF COMPLETION, CERTIFICATE OF INSTALLATION, IRRIGATION SCHEDULE OF LANDSCAPE AND IRRIGATION MAINTENANCE.

UNLESS CONTRADICTED BY A SOILS TESTS, COMPOST AT A RATE OF A MINIMUM OF FOUR CUBIC YARDS PER 1,000 SQUARE FEET OF PERMEABLE AREA SHALL BE INCORPORATED TO A DEPTH OF SIX INCHES INTO THE SOIL.

DEDICATED WATER SERVICE METERS OR PRIVATE SUB-METERS ARE TO INSTALLED FOR ALL NON RESIDENTIAL IRRIGATED LANDSCAPES 1,000 SQUARE FEET UP TO 5,000 SQUARE FEET AND RESIDENTIAL IRRIGATED LANDSCAPES OF 5,000 SQUARE FEET OR GREATER.

ALL IRRIGATION EMISSION DEVICES WILL MEET THE CRITERIA AS SET FORTH IN MWELO SECTION 492.7(a)(1)(M) AND SHALL BE INSTALLED AND OPERATED ACCORDING TO MANUFACTURER'S INSTRUCTIONS/RECOMENDATIONS.

RECIRCULATING WATER SYSTEMS SHALL BE USED FOR WATER FEATURES

CONTRACTOR TO PROTECT AND PRESERVE IN PLACE ALL EXISTING SURVEY MONUMENTS. ANY MONUMENTS DISTURBED SHALL BE RESET BY A LICENSED LAND SURVEYOR AND THE APPROPRIATE CORNER RECORD MUST BE FILED WITH THE COUNTY OF LOS ANGELES.

I HAVE COMPLIED WITH THE CRITERIA OF THE ORDINANCE AND APPLIED THEM FOR THE EFFICIENT USE OF WATER IN THE LANDSCAPE DESIGN PLANS.

811

sweeney + associates
IRRIGATION DESIGN AND CONSULTING
38730 Sky Canyon Drive, Suite C
Murrieta, Ca 92563
e: info@sweeneyassoc.com t: (951) 461-6830
w: www.sweeneyassoc.com f: (951) 461-6850

IDENTIFICATION STAMP
DIV. OF THE STATE ARCHITECT
APP. 03-119458 INC:
REVIEWED FOR
SS ☑ FLS ☑ ACS ☑
DATE: 05/23/2019

DIVISION OF STATE ARCHITECT
355 South Grand Avenue, Suite 2100
Los Angeles, California. 90012
ph: (213) 897-3995 Fax: (213) 897-3159
agency

tBP architecture planning interiors
tBP/Architecture
4611 Teller Avenue
Newport Beach, CA 92660
ph: 949.673.0300 fx: 949.732.3895
architect

AHBE LANDSCAPE ARCHITECTS
617 WEST SEVENTH STREET SUITE 304 LOS ANGELES, CA 90017
T: 213.624.3900 F: 213.624.3901
consultant

COMPTON COLLEGE INSTRUCTIONAL BUILDING No. 2

COMPTON COMMUNITY COLLEGE DISTRICT
1111 E. ARTESIA BLVD. COMPTON, CA.

owner

tBP project number : 20998.00
file name:
drawn by: checked by:
date: 04/08/19

Rev:	date:	description:

THIS DRAWING AND THE DESIGNS, DEPICTIONS, IDEAS AND OTHER INFORMATION CONTAINED HEREIN CONSTITUTE UNPUBLISHED WORK OF tBP/ARCHITECTURE AND SHALL REMAIN THE PROPERTY OF tBP/ARCHITECTURE IN PERPETUITY. NO PART THEREOF SHALL BE REPRODUCED, DISCLOSED, DISTRIBUTED, SOLD, PUBLISHED OR OTHERWISE USED IN ANY WAY WITHOUT THE ADVANCED EXPRESS WRITTEN CONSENT OF tBP/ARCHITECTURE.

drawing title:
Irrigation Plan

drawing no.:
L2.11
drawing of

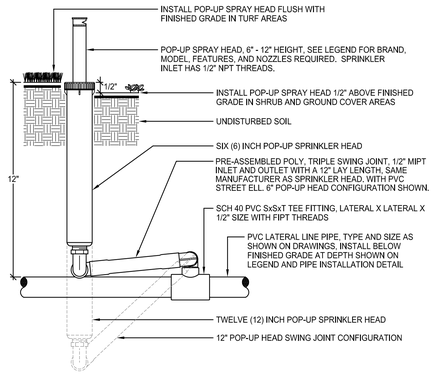

NOTE:
INSTALL SPRAY HEADS 4" FROM PAVING EDGE IN TURF AREAS.
INSTALL SPRAY HEADS 6" FROM PAVING EDGE IN SHRUB AND GROUND COVER AREAS.
INSTALL SPRAY HEADS 12" FROM THE FACE OF BUILDING WALLS OR WINDOWS.

INSTALL SPRAY HEADS PLUMB. ADJUST NOZZLE STREAM TO COVER THE LANDSCAPE AREA WITHOUT OVERSPRAY ONTO PAVING, FENCES, WALLS OR BUILDINGS.

SECTION VIEW - N.T.S.

©copyright 2014 Sweeney & Associates, Inc.

(A) POP-UP SPRINKLER HEAD

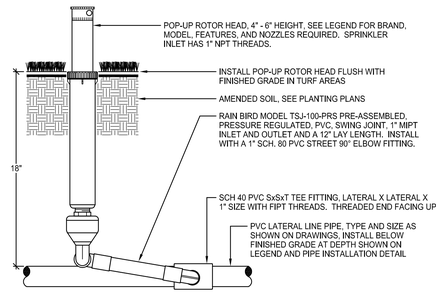

NOTE:
INSTALL ROTOR HEADS 4" FROM PAVING EDGE IN TURF AREAS.

INSTALL ROTOR HEADS PLUMB. ADJUST NOZZLE STREAM TO COVER THE LANDSCAPE AREA WITHOUT OVERSPRAY ONTO PAVING, FENCES, WALLS OR BUILDINGS.

SECTION VIEW - N.T.S.

©copyright 2014 Sweeney & Associates, Inc.

(B) POP-UP ROTOR HEAD

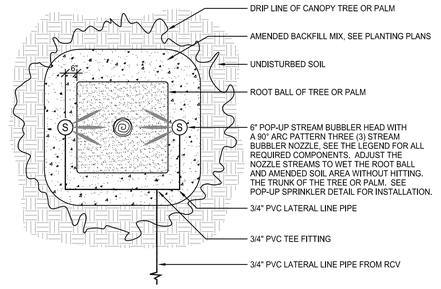

NOTE:
POSITION MSBN-50Q STREAM BUBBLER HEADS 1" FROM THE ROOT BALL.

PLAN VIEW - N.T.S.

©copyright 2014 Sweeney & Associates, Inc.

(C) TREE BUBBLER LAYOUT

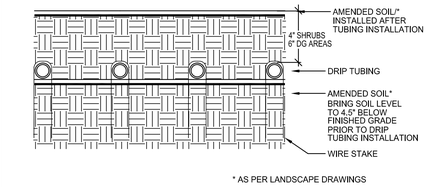

* AS PER LANDSCAPE DRAWINGS

RECOMMENDED INSTALLATION:

TO INSURE EVEN PARALLEL AND LEVEL TUBING ROWS IT IS RECOMMENDED THAT THE SOIL LEVEL IN THE PLANTER AREAS BE BROUGHT TO 4.5"/6.5" BELOW FINISHED GRADE AND PROPERLY COMPACTED AS PER THE LANDSCAPED DRAWINGS PRIOR TO THE INSTALLATION OF THE TUBING.

INSTALL TUBING AS INDICATED ON THESE DRAWINGS AND SECURE TO GRADE USING WIRE HOOP STAKES AT 5 FEET ON CENTER SPACING.

BACKFILL FINAL 4.5" OF SOIL OVER THE TUBING AFTER INSTALLATION OF THE TUBING AND OBSERVATION BY THE OWNER'S AUTHORIZED REPRESENTATIVE.

SECTION VIEW - N.T.S.

©copyright 2014 Sweeney & Associates, Inc.

(D) DRIP TUBING LAYOUT (SECTION VIEW)

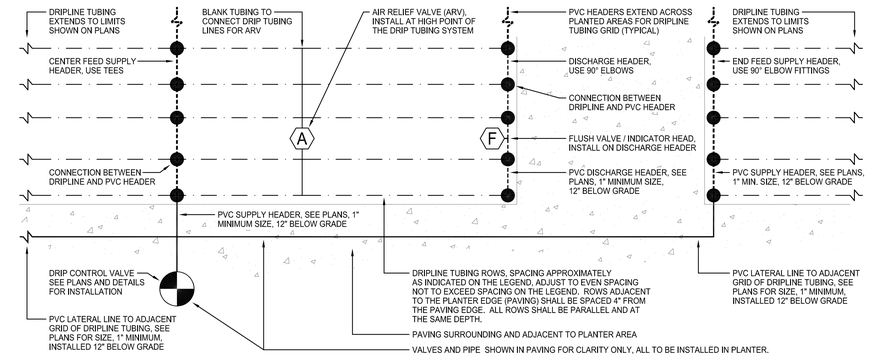

PLAN VIEW - N.T.S.

©copyright 2014 Sweeney & Associates, Inc.

(E) DRIP TUBING LAYOUT (PLAN VIEW)

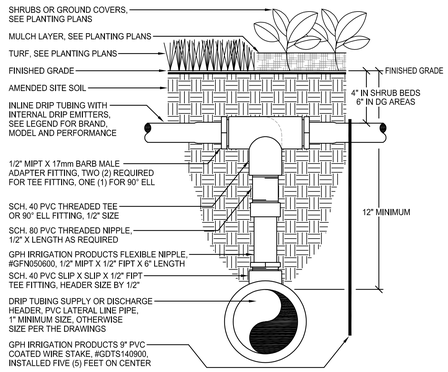

NOTE:
DRIP TUBING CONNECTION REQUIRED FOR ALL CONNECTIONS BETWEEN DRIP TUBING AND PVC HEADERS.
FOR CONNECTIONS AT END RUNS OF TUBING, USE A 90° ELL FITTING AND ONE ADAPTER FITTING FOR CONNECTION.
FOR CONNECTIONS IN THE MIDDLE OF RUNS OF TUBING, USE A TEE FITTING AND TWO ADAPTER FITTINGS FOR THE CONNECTION.

SECTION VIEW - N.T.S.

©copyright 2014 Sweeney & Associates, Inc.

(F) DRIP TUBING CONNECTION

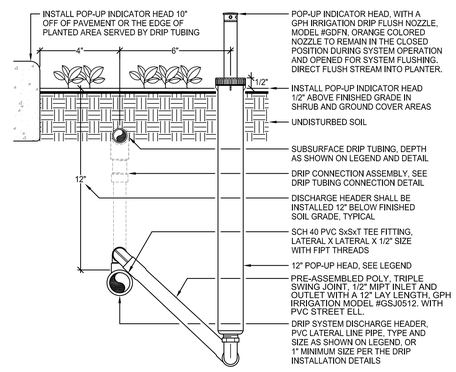

NOTE:
INSTALL INDICATOR HEAD 10" FROM THE EDGE OF PAVING OR THE PLANTER EDGE.

INSTALL ORANGE COLORED INDICATOR NOZZLE ON POP-UP HEAD AND ADJUST TO FULLY CLOSED.

SECTION VIEW - N.T.S.

©copyright 2014 Sweeney & Associates, Inc.

(G) FLUSH VALVE/INDICATOR HEAD

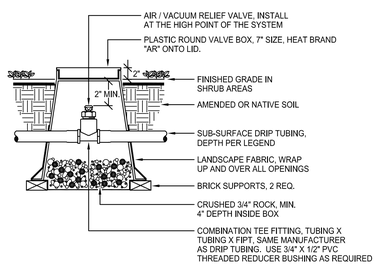

SECTION VIEW - N.T.S.

©copyright 2014 Sweeney & Associates, Inc.

(H) AIR RELIEF VALVE

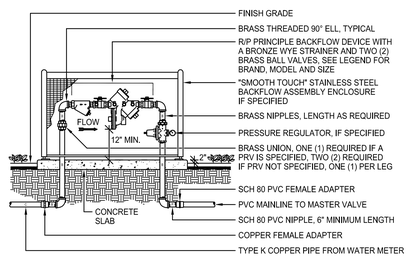

NOTE:
INSTALL THE PRESSURE REGULATOR ONLY IF IT IS SPECIFIED IN THE LEGEND.
BACKFLOW DEVICE OUTLET SHALL BE INSTALLED A MINIMUM OF 12" ABOVE FINISHED GRADE.
ASSEMBLY PIPING AND FITTINGS SHALL BE SIZED EQUAL TO THE SIZE OF THE BACKFLOW PREVENTION DEVICE
USE AN APPROVED, NON-HARDENING, TEFLON ASSEMBLY PASTE ON ALL THREADED FITTINGS.
CONCRETE SLAB SHALL BE A MINIMUM OF 4" THICK, 18" WIDE AND EXTEND AT LEAST 8" PAST THE BACKFLOW ASSEMBLY PIPING, OR BE THE SIZE REQUIRED BY THE ENCLOSURE MANUFACTURER.

SECTION VIEW - N.T.S.

©copyright 2014 Sweeney & Associates, Inc.

(I) BACKFLOW DEVICE

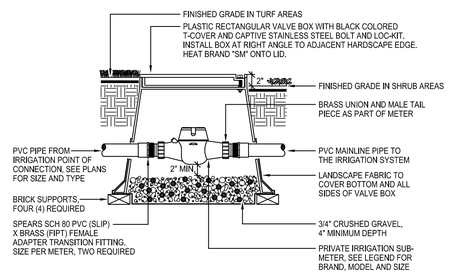

NOTE:
INSTALL THE SUB-METER WITH A MINIMUM OF 10 "PIPE DIAMETERS" CLEAR PIPE UPSTREAM AND DOWNSTREAM OF THE SUB-METER, PER THE MANUFACTURER'S REQUIREMENTS.
USE AN APPROVED, NON-HARDENING, TEFLON ASSEMBLY PASTE ON ALL THREADED FITTINGS.
USE STANDARD BOX OPENINGS FOR ALL PIPING INTO THE BOX, DO NOT CUT THE BOX.

SECTION VIEW - N.T.S.

©copyright 2014 Sweeney & Associates, Inc.

(J) SUB-METER LAYOUT

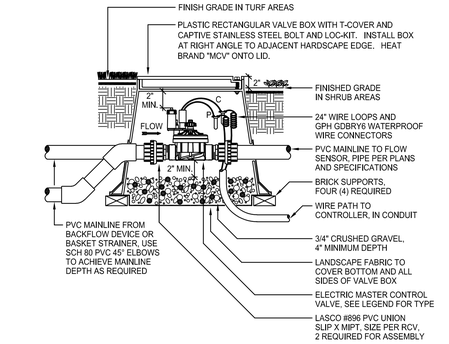

NOTE:
USE STANDARD OPENINGS PROVIDED IN VALVE BOX FOR PIPE, DO NOT CUT BOX.

SECTION VIEW - N.T.S.

©copyright 2014 Sweeney & Associates, Inc.

(K) MASTER CONTROL VALVE

I HAVE COMPLIED WITH THE CRITERIA OF THE ORDINANCE AND APPLIED THEM FOR THE EFFICIENT USE OF WATER IN THE LANDSCAPE DESIGN PLANS.

sweeney + associates
IRRIGATION DESIGN AND CONSULTING
38730 Sky Canyon Drive, Suite C
Murrieta, Ca 92563
e: info@sweeneyassoc.com t: (951) 461-6830
w: www.sweeneyassoc.com f: (951) 461-6850

IDENTIFICATION STAMP
DIV. OF THE STATE ARCHITECT
APP. 03-119458 INC:
REVIEWED FOR
SS ☑ FLS ☑ ACS ☑
DATE:05/23/2019

DIVISION OF STATE ARCHITECT
355 South Grand Avenue, Suite 2100
Los Angeles, California. 90012
ph: (213) 897-3995 Fax: (213) 897-3159
agency

tBP
architecture
planning
interiors
tBP/Architecture
4611 Teller Avenue
Newport Beach, CA 92660
ph: 949.673.0300 fx: 949.732.3895
architect

AHBE
LANDSCAPE ARCHITECTS
617 WEST SEVENTH STREET
SUITE 304
LOS ANGELES, CA 90017
T: 213.694.3800 F: 213.694.3801
consultant

COMPTON COLLEGE
INSTRUCTIONAL BUILDING No. 2
COMPTON COMMUNITY COLLEGE DISTRICT
1111 E. ARTESIA BLVD. COMPTON, CA.
owner

tBP project number : 20998.00
file name:
drawn by: checked by:
date: 04/08/19

Rev:	date:	description:

THE DRAWING AND THE DESIGNS, DEPICTIONS, IDEAS AND OTHER INFORMATION CONTAINED HEREIN CONSTITUTE UNPUBLISHED WORK OF tBP/ARCHITECTURE AND SHALL REMAIN THE PROPERTY OF tBP/ARCHITECTURE IN PERPETUITY. NO PART THEREOF SHALL BE REPRODUCED, PUBLISHED, DISTRIBUTED, SOLD, PLAGIARIZED OR OTHERWISE USED IN ANY WAY WITHOUT THE ADVANCED EXPRESS WRITTEN CONSENT OF tBP/ARCHITECTURE.

drawing title:
Irrigation Details

drawing no.:
L2.51
drawing of

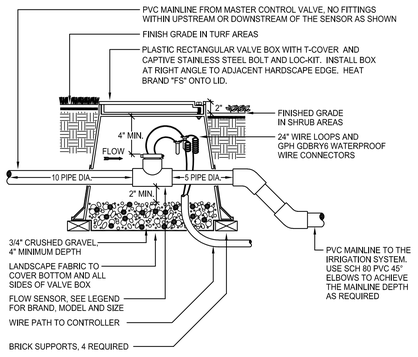

NOTE:
USE STANDARD OPENINGS PROVIDED IN VALVE BOX FOR PIPE, DO NOT CUT BOX.

SECTION VIEW - N.T.S.

©copyright 2014 Sweeney & Associates, Inc.

(L) FLOW SENSOR

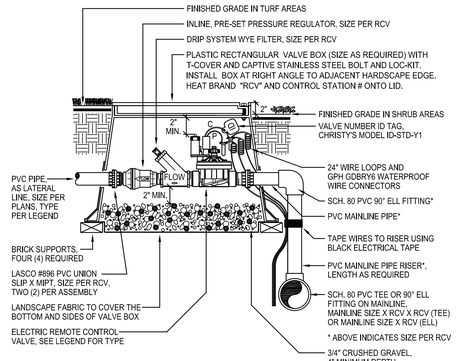

NOTE:
USE AN APPROVED, NON-HARDENING, TEFLON ASSEMBLY PASTE ON ALL THREADED FITTINGS.
USE STANDARD BOX OPENINGS FOR ALL PIPING INTO THE BOX, DO NOT CUT THE BOX.

SECTION VIEW - N.T.S.

©copyright 2017 Sweeney & Associates, Inc.

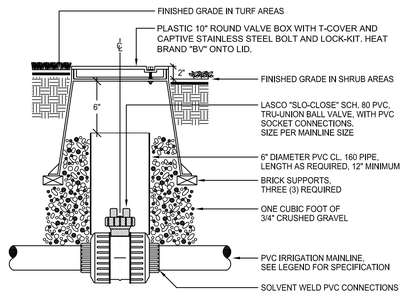

NOTE:
PROVIDE ONE (1) 30" LONG STEEL "VALVE KEY" FOR EACH TEN (10) BALL VALVES INSTALLED ON THE PROJECT.

SECTION VIEW - N.T.S.

©copyright 2014 Sweeney & Associates, Inc.

(M) BALL VALVE

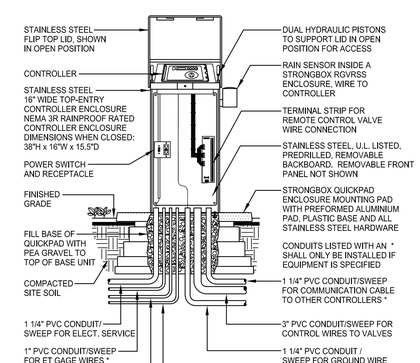

SECTION VIEW - N.T.S.

©copyright 2014 Sweeney & Associates, Inc.

(N) QUICK COUPLER VALVE

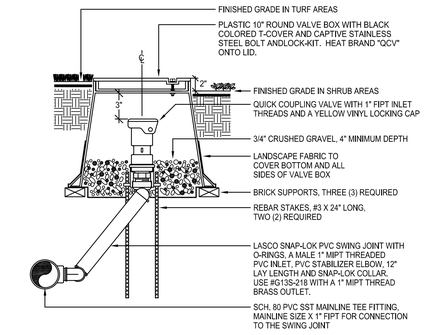

NOTE:
WHEN QCV IS LOCATED ON A MANIFOLD, USE A SCH. 80 SxT 90° ELBOW IN PLACE OF THE TEE FITTING. SIZE THE ELBOW AS MANIFOLD MAINLINE SIZE X 1" FIPT.

WHEN USING A 3/4" QUICK COUPLER VALVE, USE A LASCO G13T-212 SWING JOINT WITH A 3/4" BRASS OUTLET FOR CONNECTION TO THE QCV INLET. ALL OTHER PARTS OF SWING JOINT SHALL REMAIN 1" SIZE.

USE A NON-HARDENING, TEFLON ASSEMBLY PASTE ON ALL THREADED FITTINGS.

SECTION VIEW - N.T.S.

©copyright 2014 Sweeney & Associates, Inc.

(O) REMOTE CONTROL VALVE

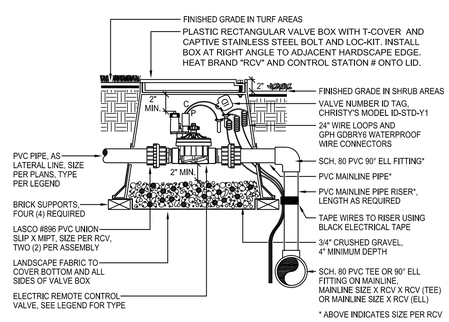

NOTE:
USE AN APPROVED, NON-HARDENING, TEFLON ASSEMBLY PASTE ON ALL THREADED FITTINGS.
USE STANDARD BOX OPENINGS FOR ALL PIPING INTO THE BOX, DO NOT CUT THE BOX.

SECTION VIEW - N.T.S.

©copyright 2017 Sweeney & Associates, Inc.

(P) DRIP REMOTE CONTROL VALVE

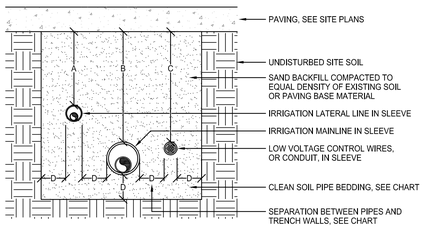

PIPE SIZES	A	B	C	D
UNDER PEDESTRIAN PAVING	12"	24"	24"	4"
UNDER VEHICULAR PAVING	24"	36"	36"	6"

NOTE:
CONTRACTOR IS REQUIRED TO CONTACT 811 OR DIGALERT A MINIMUM OF TWO (2) DAYS PRIOR TO ANY EXCAVATION ON THE PROJECT. DIAL 811 OR LOG ONTO WWW.DIGALERT.ORG.

SLEEVES SHALL BE TWICE THE DIAMETER OF THE PIPE OR WIRE BUNDLE CARRIED WITHIN, EXCEPT WHEN USING BELL AND GASKET PIPING WHERE MAINLINE SLEEVES SHALL BE 2.5 TIMES THE SIZE OF THE PIPE.

SLEEVES SHALL EXTEND 12" PAST THE EDGE OF PAVING INTO THE PLANTER.

SECTION VIEW - N.T.S.

©copyright 2017 Sweeney & Associates, Inc.

(Q) CONTROLLER ASSEMBLY

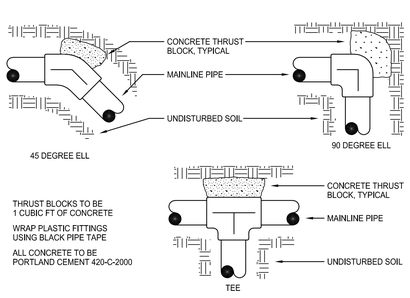

PLAN VIEW - N.T.S.

©copyright 2014 Sweeney & Associates, Inc.

(R) GROUNDING ROD

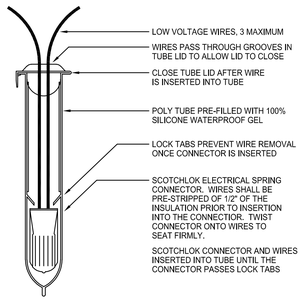

NOTE:
WIRE CONNECTOR SHALL BE A GPH IRRIGATION GDBRY6 DIRECT BURY SPLICE KIT.
KIT SHALL INCLUDE A SCOTCHLOK SPRING CONNECTOR, A POLYPROPYLENE TUBE AND A 100% SILICONE WATERPROOF SEALING GEL. TUBE SHALL BE SUPPLIED PRE-FILLED WITH GEL.

SECTION VIEW - N.T.S.

©copyright 2017 Sweeney & Associates, Inc.

(S) PIPE INSTALLATION

NOTE:
1. CENTER VALVE BOX OVER REMOTE CONTROL VALVE OR DRIP ASSEMBLY TO FACILITATE SERVICING OF THE VALVE OR EQUIPMENT.
2. SET RCV AND VALVE BOX ASSEMBLY IN GROUND COVER OR SHRUB AREAS WHERE EVER POSSIBLE, VALVES IN TURF AREAS TO BE APPROVED BY LANDSCAPE ARCHITECT.
3. SET BOXES PARALLEL TO EACH OTHER AND PERPENDICULAR TO ADJACENT PAVING EDGE.
4. AVOID HEAVILY COMPACTING SOIL AROUND VALVE BOXES TO PREVENT THE COLLAPSE AND / OR DEFORMATION OF VALVE BOXES.
5. BOX LOCATIONS SHALL BE STAKED IN THE FIELD PRIOR TO MAINLINE INSTALLATION FOR REVIEW AND APPROVAL BY THE LANDSCAPE ARCHITECT.

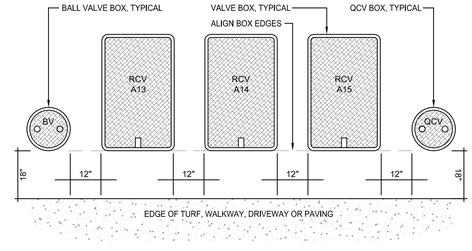

NOTE:
VALVE BOXES SHALL BE INSTALLED IN SHRUB AND GROUND COVER AREAS. NO VALVES SHALL BE INSTALLED IN TURF AREAS WITHOUT PRIOR APPROVAL BY THE LANDSCAPE ARCHITECT.

PLAN VIEW - N.T.S.

©copyright 2017 Sweeney & Associates, Inc.

(T) SLEEVE INSTALLATION

(U) THRUST BLOCKS

(V) WIRE CONNECTION

(W) VALVE BOX LAYOUT

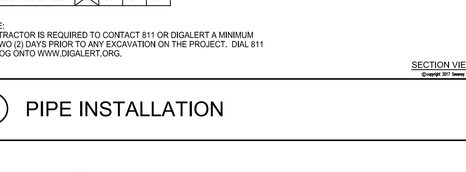

PIPE SIZES	A	B	C	D
SIZES 3/4" TO 2 1/2"	12"	18"	18"	4"
SIZES 3" AND 4"	18"	24"	24"	4"
SIZES 6" AND LARGER	X	30"	24"	6"

NOTE:
CONTRACTOR IS REQUIRED TO CONTACT 811 OR DIGALERT A MINIMUM OF TWO (2) DAYS PRIOR TO ANY EXCAVATION ON THE PROJECT. DIAL 811 OR LOG ONTO WWW.DIGALERT.ORG.

SECTION VIEW - N.T.S.

©copyright 2017 Sweeney & Associates, Inc.

I HAVE COMPLIED WITH THE CRITERIA OF THE ORDINANCE AND APPLIED THEM FOR THE EFFICIENT USE OF WATER IN THE LANDSCAPE DESIGN PLANS.

sweeney + associates
IRRIGATION DESIGN AND CONSULTING
38730 Sky Canyon Drive, Suite C
Murrieta, Ca 92563
e: info@sweeneyassoc.com t: (951) 461-6830
w: www.sweeneyassoc.com f: (951) 461-6850

IDENTIFICATION STAMP
DIV. OF THE STATE ARCHITECT
APP. 03-119458 INC:
REVIEWED FOR
SS ☑ FLS ☑ ACS ☑
DATE:05/23/2019

DIVISION OF STATE ARCHITECT
355 South Grand Avenue, Suite 2100
Los Angeles, California. 90012
ph: (213) 897-3995 Fax: (213) 897-3159
agency

tBP
architecture
planning
interiors

tBP/Architecture
4611 Teller Avenue
Newport Beach, CA 92660
ph: 949.673.0300 fx: 949.732.3895
architect

AHBE
LANDSCAPE ARCHITECTS
617 WEST SEVENTH STREET
SUITE 304
LOS ANGELES, CA 90017
T: 213.624.3900 F: 213.624.3901
consultant

COMPTON COLLEGE
INSTRUCTIONAL BUILDING No. 2

COMPTON COMMUNITY COLLEGE DISTRICT
1111 E. ARTESIA BLVD. COMPTON, CA.

owner

tBP project number : 20998.00
file name:
drawn by: checked by:
date: 04/08/19

Rev:	date:	description:

THE DRAWING AND THE DESIGNS, EXPRESSIONS, IDEAS AND OTHER INFORMATION CONTAINED HEREIN CONSTITUTE UNPUBLISHED WORK OF tBP/ARCHITECTURE AND SHALL REMAIN THE PROPERTY OF tBP/ARCHITECTURE IN PERPETUITY. NO PART THEREOF SHALL BE REPRODUCED, PUBLISHED, DISTRIBUTED, SOLD, PUBLISHED OR OTHERWISE USED IN ANY WAY WITHOUT THE ADVANCED EXPRESS WRITTEN CONSENT OF tBP/ARCHITECTURE.

drawing title:
Irrigation Details

drawing no.:
L2.52
drawing of

FINE GRADING NOTES

1. FINE GRADING SHALL BE APPROVED BY THE LANDSCAPE ARCHITECT IN THE FIELD PRIOR TO IRRIGATION INSTALLATION, SOIL PREPARATION AND PLANTING. ALL PLANTING AREAS SHALL BE GRADES TO THE ELEVATIONS INDICATED ON THE CIVIL ENGINEER'S PLANS.
2. CONTRACTOR SHALL MAINTAIN A MINIMUM OF 2% DRAINAGE AWAY FROM ALL BUILDINGS, STRUCTURES, AND WALLS. FINISHED GRADES SHALL BE SMOOTHED TO ELIMINATE PUDDLING OR STANDING WATER.
3. EXCESS SOIL FROM LANDSCAPE GRADING TO BE REMOVED AND DISPOSED OF OFF-SITE BY CONTRACTOR.
4. REFER TO CIVIL ENGINEER'S DRAWINGS FOR GRADING AND DRAINAGE INFORMATION AND OTHER RELATED NON-LANDSCAPE WORK. VERIFY ON-SITE AND REPORT DISCREPANCIES TO LANDSCAPE ARCHITECT BEFORE START OF ANY WORK ON THIS CONTRACT.
5. COMPACTED SOIL IN ALL PLANTING AREAS SHALL BE RIPPED TO A DEPTH OF EIGHTEEN (18) INCHES PRIOR TO SOIL AMENDMENT WORK.

PLANTING NOTES:

1. THE PLANTING PLAN IS DIAGRAMMATIC. ALL PLANT LOCATIONS ARE APPROXIMATE. ON CENTER SPACING AND SYMBOLS TAKE PRECEDENCE OVER PLANT QUANTITIES SPECIFIED. QUANTITIES, IF SHOWN ON THE PLANTING PLAN ARE APPROXIMATE AND ARE FOR REFERENCE ONLY. CONTRACTOR SHALL NOTIFY THE LANDSCAPE ARCHITECT OF DISCREPANCIES BETWEEN QUANTITIES AND THE SYMBOLS SHOWN. CONTRACTOR SHALL BE RESPONSIBLE FOR VERIFYING ALL PLANT COUNTS AND SQUARE FOOTAGES.
2. TREE LOCATION MAY BE ADJUSTED TO AVOID CONFLICTS WITH UNDERGROUND UTILITIES. CONSULT WITH LANDSCAPE ARCHITECT OR OWNER'S REPRESENTATIVE PRIOR TO ADJUSTMENT OF TREE LOCATIONS, ESPECIALLY THOSE ARRANGED ON A SPECIFIED MODULE OR IN A GRID PATTERN.
3. CONTRACTOR SHALL ACCOMPANY THE PROJECT AGRONOMIST TO THE SITE FOR THE PURPOSE OF TAKING SOIL SAMPLES, CONDUCTING PERCOLATION TESTS, AND REVIEWING EXISTING SITE CONDITIONS. THE QUANTITY OF SAMPLES ARE NOTED IN THE SPECIFICATIONS. SUBMIT SOIL TEST RESULTS AND RECOMMENDATIONS TO LANDSCAPE ARCHITECT FOR APPROVAL PRIOR TO SOIL PREPARATION. THIS REQUIREMENT APPLIES TO ALL SOILS AND CONDITIONS WITHIN THIS PROJECT. REFER TO SPECIFICATIONS FOR FURTHER REQUIREMENTS.
4. THE CONTRACTOR SHALL BE RESPONSIBLE FOR THE REVIEW AND COORDINATION OF ALL DRAWINGS AND SPECIFICATIONS PRIOR TO THE START OF CONSTRUCTION. ANY DISCREPANCIES THAT OCCUR SHALL BE BROUGHT TO THE ATTENTION OF THE ARCHITECT, LANDSCAPE ARCHITECT, OR THE ENGINEER, PRIOR TO THE START OF CONSTRUCTION. SO THAT A CLARIFICATION CAN BE ISSUED.
5. CONTRACTOR SHALL GIVE NOTICE OF PLANTING (3) BUSINESS DAYS PRIOR TO INSTALLATION. CONTRACTOR SHALL LAY OUT PLANT MATERIAL PRIOR TO INSTALLATION FOR LANDSCAPE ARCHITECT'S REVIEW AND APPROVAL.
   a. CENTERPOINTS OF TREES SHOULD BE STAKED WITH GRADE LATH STAKES. CONTAINER SIZE AND PLANT NAME SHALL BE NOTED ON EACH STAKE.
   b. SHRUBS SHALL BE PLACED IN THEIR "FINAL" LOCATIONS.
   c. LANDSCAPE ARCHITECT HAS THE RIGHT TO ADJUST PLANT LOCATIONS AND SPACING UPON REVIEWING IN THE FIELD.
   d. ALL PLANTED AREAS TO BE WEED FREE PRIOR TO PLANTING.
6. IF CONFLICTS ARISE BETWEEN ACTUAL SIZE OF PLANTING AREAS ON-SITE AND THOSE AREAS INDICATED ON DRAWINGS, CONTACT OWNER'S AUTHORIZED REPRESENTATIVE FOR RESOLUTION. FAILURE TO MAKE SUCH CONFLICTS KNOW TO OWNER'S AUTHORIZED REPRESENTATIVE IN A TIMELY FASHION MAY RESULT IN CONTRACTOR'S OWN LIABILITY TO RELOCATE PLANT MATERIALS.
7. REFER TO PLANTING DETAILS FOR ALL INSTALLATION AND STAKING REQUIREMENTS.
8. ALL TREES LOCATED WITHIN 3' OF PAVEMENT OR STRUCTURES ARE TO HAVE ROOT CONTROL BARRIERS INSTALLED AT TIME OF PLANTING. UNLESS OTHERWISE SPECIFIED, A 12' LONG X 18' DEEP LINEAR BARRIER SHALL BE INSTALLED AT EDGE OF PAVEMENT/STRUCTURE, WITH LENGTH CENTERED AT THE TREE TRUNK.
9. NURSERY STAKES ARE TO BE REMOVED AFTER PLANTING TREES AND STAKING OR GUYING AS SHOWN ON PLANS AND AS DIRECTED BY LANDSCAPE ARCHITECT.
10. TREES PLANTED IN TURF AREAS ARE TO HAVE TRUNKS PROTECTED WITH PERFORATED POLYETHYLENE TREE TRUNK PROTECTORS (ARBOR-GARD+ OR EQUAL).
11. CONTRACTOR IS RESPONSIBLE FOR PRUNING TREES AS DIRECTED BY LANDSCAPE ARCHITECT. NO PRUNING IS TO BE DONE UNLESS DIRECTED.
12. TRIANGULAR SPACE GROUNDCOVERS AND SHRUBS, UNLESS OTHERWISE INDICATED ON DRAWINGS.
13. SEE DETAIL FOR PLACEMENT OF SHRUBS IN IRREGULARLY SHAPED PLANTING AREAS.
14. MULCH ALL AREAS (EXCEPT TURF, SLOPES 2:1 AND GREATER, AND AS NOTED ON PLANS) WITH 3" LAYER OF SPECIFIED MATERIAL. AREAS PLANTED WITH FLATTED MATERIAL ARE TO HAVE A 2" LAYER OF MULCH.
15. ALL SLOPES 2:1 OR GREATER ARE TO BE STABILIZED WITH JUTE MESH PRIOR TO PLANTING. DO NOT INSTALL JUTE MESH ON SEEDED SLOPES. SEE SPECIFICATIONS.
16. WHERE GROUNDCOVER IS SHOWN ON PLANS: GROUNDCOVER PLANTING CONTINUES UNDER SHRUBS AND TREES AT SPECIFIED SPACING. DO NOT PLANT GROUNDCOVER IN SHRUB/TREE WATERING BASINS.
17. CONTRACTOR SHALL MAINTAIN ALL PLANTING FOR A PERIOD OF NINETY (90) DAYS AFTER COMPLETION AND ACCEPTANCE BY LANDSCAPE ARCHITECT, UNLESS OTHERWISE NOTED IN SPECIFICATIONS. ALL AREAS SHOULD BE KEPT CLEAN, WATERED AND WEED-FREE.
18. PRIOR TO END OF MAINTENANCE PERIOD, LANDSCAPE CONTRACTOR SHALL CONTACT OWNER AND ARRANGE A FINAL WALKTHROUGH INSPECTION BY LANDSCAPE ARCHITECT. OWNER MUST ACCEPT ALL MAINTAINED AREAS IN WRITING PRIOR TO END OF MAINTENANCE PERIOD. OWNER SHALL BE RESPONSIBLE FOR FUTURE MAINTENANCE AFTER THE MAINTENANCE PERIOD AND FINAL WALK THROUGH.

TREE LEGEND:

SYMBOL	BOTANICAL NAME "COMMON NAME"	SIZE (HTxSPR)	WUCOLS	COMMENTS	DETAIL
	AGONIS FLEXUOSA 'BURGUNDY' "BURGUNDY PEPPERMINT WILLOW"	36" BOX	L	STANDARD	2/L3.51
	GEIJERA PARVIFOLIA "AUSTRALIAN WILLOW"	36" BOX	L		2/L3.51
	TIPUANA TIPU "TIPU TREE"	36" BOX	M	STANDARD	2/L3.51
	ULMUS PARVIFOLIA 'DRAKE' CHINESE ELM DRAKE	48" BOX	M	STANDARD	2/L3.51

SHRUB, VINE & GROUNDCOVER LEGEND:

SYMBOL	BOTANICAL NAME "COMMON NAME"	SIZE (HTxSPR)	WUCOLS	COMMENTS	DETAIL
⊕	ANIGOZANTHOS 'BIG RED' "BIG RED KANGAROO PAW"	5 GAL.	M		3,5/L3.51
✲	HESPERALOE PARVIFLORA 'BREAKLIGHTS' "RED YUCCA"	5 GAL.	L		3,5/L3.51
⊕	MYRTUS COMMUNIS 'COMPACTA' "DWARF MYRTLE"	1 GAL.	L		3,5/L3.51
○	DIETES X 'NOLA ALBA' KATRINA® AFRICAN IRIS	5 GAL.	L		3,5/L3.51
	KURAPIA GROUND COVER	SOD	L	AVAILABLE AT WEST COAST TURF	
	TURF TIFWAY II	BIG ROLL SOD	M		
	3/4" GRAVEL COLOR: "PEWTER GRAY CRUSHED STONE"	3" LAYER	–	AVAILABLE AT SOUTHWEST BOULDER AND STONE	7/L3.51

IDENTIFICATION STAMP
DIV. OF THE STATE ARCHITECT
APP. 03-119458 INC:
REVIEWED FOR
SS ☑ FLS ☑ ACS ☑
DATE: 05/23/2019

DIVISION OF STATE ARCHITECT
355 South Grand Avenue, Suite 2100
Los Angeles, California. 90012
ph: (213) 897-3995 Fax: (213) 897-3159
agency

tBP
architecture
planning
interiors
tBP/Architecture
4611 Teller Avenue
Newport Beach, CA 92660
ph: 949.673.0300 fx: 949.732.3895
architect

AHBE
LANDSCAPE ARCHITECTS
617 WEST SEVENTH STREET
SUITE 304
LOS ANGELES, CA 90017
T: 213.694.3800 F: 213.694.3801
consultant

COMPTON COLLEGE
INSTRUCTIONAL BUILDING No. 2
COMPTON COMMUNITY COLLEGE DISTRICT
1111 E. ARTESIA BLVD. COMPTON, CA.
owner

tBP project number : 20998.00
file name:
drawn by: checked by:
date: 04/08/19

Rev:	date:	description:

© THE DRAWING AND THE DESIGNS, DIRECTIONS, IDEAS AND OTHER INFORMATION CONTAINED HEREIN CONSTITUTE UNPUBLISHED WORK OF tBP/ARCHITECTURE AND SHALL REMAIN THE PROPERTY OF tBP/ARCHITECTURE IN PERPETUITY. NO PART THEREOF SHALL BE REPRODUCED, DISCLOSED, DISTRIBUTED, SOLD, PUBLISHED OR OTHERWISE USED IN ANY WAY WITHOUT THE ADVANCED EXPRESS WRITTEN CONSENT OF tBP/ARCHITECTURE.

drawing title:
Landscape Planting Legend & Notes

drawing no.:
L3.00
drawing of

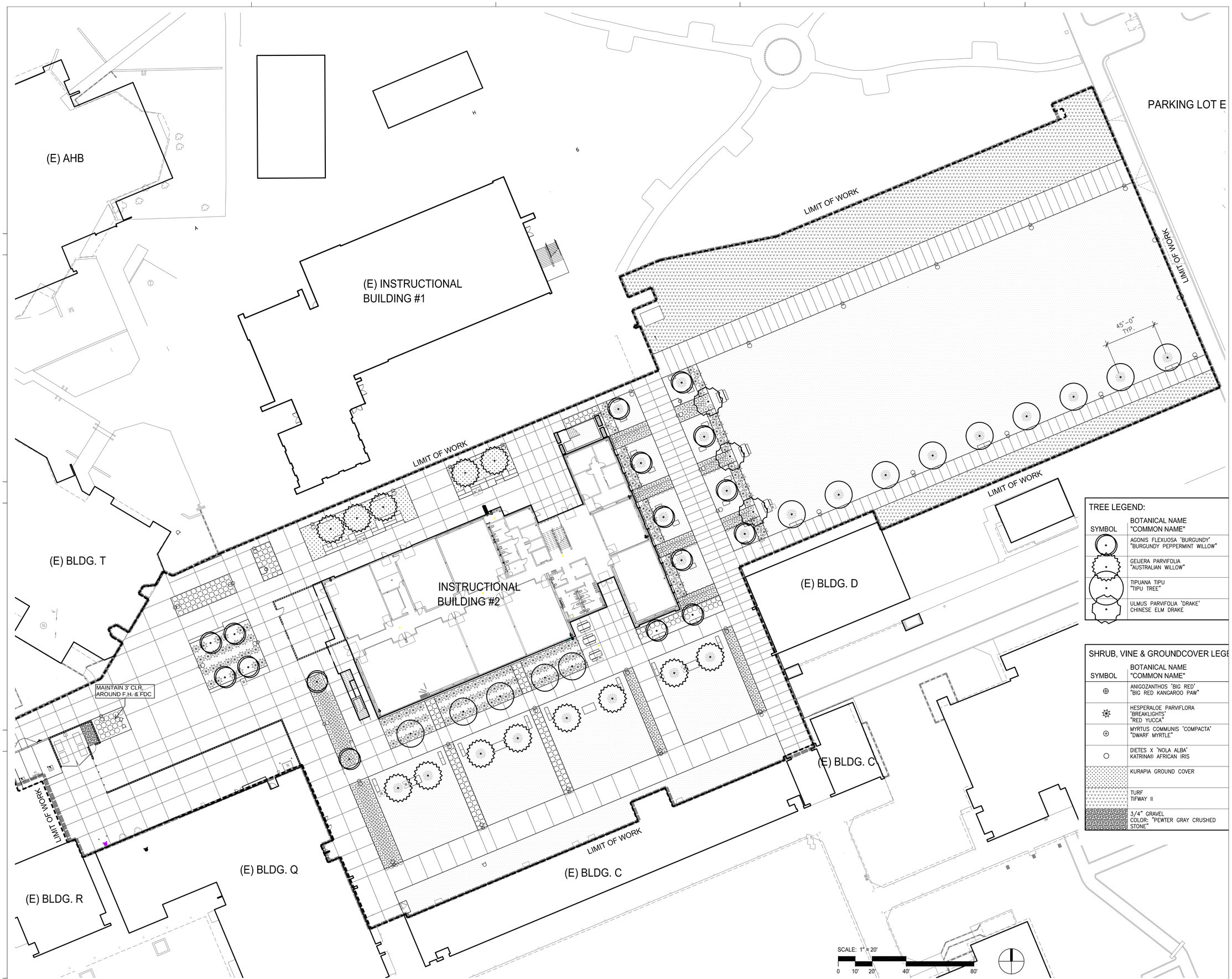

TREE LEGEND:

SYMBOL	BOTANICAL NAME "COMMON NAME"
	AGONIS FLEXUOSA 'BURGUNDY' "BURGUNDY PEPPERMINT WILLOW"
	GEIJERA PARVIFOLIA "AUSTRALIAN WILLOW"
	TIPUANA TIPU "TIPU TREE"
	ULMUS PARVIFOLIA 'DRAKE' CHINESE ELM DRAKE

SHRUB, VINE & GROUNDCOVER LEGE

SYMBOL	BOTANICAL NAME "COMMON NAME"
	ANIGOZANTHOS 'BIG RED' "BIG RED KANGAROO PAW"
	HESPERALOE PARVIFLORA 'BREAKLIGHTS' "RED YUCCA"
	MYRTUS COMMUNIS 'COMPACTA' "DWARF MYRTLE"
	DIETES X 'NOLA ALBA' KATRINA® AFRICAN IRIS
	KURAPIA GROUND COVER
	TURF TIFWAY II
	3/4" GRAVEL COLOR: "PEWTER GRAY CRUSHED STONE"

IDENTIFICATION STAMP
DIV. OF THE STATE ARCHITECT
APP. 03-119458 INC:
REVIEWED FOR
SS ☑ FLS ☑ ACS ☑
DATE:05/23/2019

DIVISION OF STATE ARCHITECT
355 South Grand Avenue, Suite 2100
Los Angeles, California. 90012
ph: (213) 897-3995 Fax: (213) 897-3159
agency

tBP architecture planning interiors

tBP/Architecture
4611 Teller Avenue
Newport Beach, CA 92660
ph: 949.673.0300 fx: 949.732.3895
architect

AHBE LANDSCAPE ARCHITECTS
617 WEST SEVENTH STREET
SUITE 304
LOS ANGELES, CA 90017
T: 213.694.3800 F: 213.694.3801
consultant

COMPTON COLLEGE
INSTRUCTIONAL BUILDING No. 2

COMPTON COMMUNITY COLLEGE DISTRICT
1111 E. ARTESIA BLVD. COMPTON, CA.
owner

tBP project number : 20998.00
file name:
drawn by: checked by:
date: 04/08/19

Rev:	date:	description:

THIS DRAWING AND THE DESIGNS, DEPICTIONS, IDEAS AND OTHER INFORMATION CONTAINED HEREIN CONSTITUTE UNPUBLISHED WORK OF tBP/ARCHITECTURE AND SHALL REMAIN THE PROPERTY OF tBP/ARCHITECTURE IN PERPETUITY. NO PART THEREOF SHALL BE REPRODUCED, DISCLOSED, DISTRIBUTED, SOLD, PUBLISHED OR OTHERWISE USED IN ANY WAY WITHOUT THE ADVANCED EXPRESS WRITTEN CONSENT OF tBP/ARCHITECTURE.

drawing title:
Landscape Planting Plan

drawing no.:
L3.11
drawing of

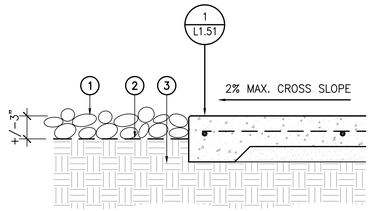

LEGEND

1. GRAVEL, SEE PLANTING LEGEND. SUBMIT SAMPLE FOR APPROVAL PRIOR TO INSTALLATION.
2. WEED CONTROL FABRIC.
3. COMPACTED SUBGRADE.

7 ROCK COBBLE EDGE

SCALE: 1–1/2" = 1'–0" .dwg

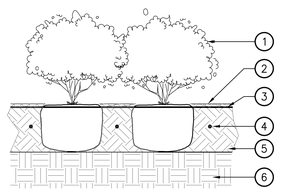

NOTE

1. CONTAINER GROWN SHRUBS – LOOSEN ROOTS AT EDGE OF ROOTBALL.
2. WHERE SHRUBS AND GROUNDCOVER ARE PLANTED IN BEDS, EXCAVATE AND PREPARE ENTIRE BED.
3. REMOVE ALL ROCKS 2" DIA. OR GREATER FROM BACKFILL MIX & DISPOSE OF OUTSIDE OF PLANTED AREAS

LEGEND

1. GROUNDCOVER OR SHRUB, SEE PLAN FOR TYPE AND SPACING. SET TOP OF BALL 1/2"–1" ABOVE FG.
2. MULCH, DO NOT COVER TOP OF ROOTBALL.
3. FINISH GRADE.
4. DRIP TUBING, 4" BELOW FG, SEE IRRIGATION PLANS.
5. PREPARE ENTIRE PLANTING AREA SOIL DEPTH REFER TO SPECIFICATIONS.
6. EXISTING SOIL.

4 GROUNDCOVER PLANTING

SCALE: N.T.S. Groundcover Planting.dwg

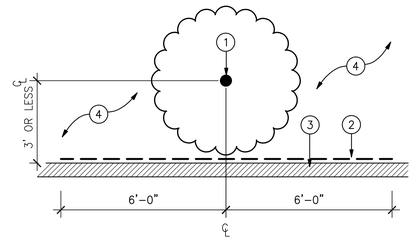

LEGEND

1. TREE TRUNK.
2. 12 LF OF 24"–DEEP ROOT CONTROL BARRIER: DEEPROOT UB–24 OR EQUIVALENT. CENTER BARRIER ON TRUNK OF TREE. INSTALL PER MANUFACTURER'S SPECIFICATIONS.
3. HARDSCAPE ELEMENT: CURB, SIDEWALK, WALL, ETC.
4. PLANTING AREA.

NOTES:

SEE MANUFACTURER'S RECOMMENDED DETAIL 12/L3.51 FOR TREES ADJACENT TO UTILITY LINES.

1 ROOT CONTROL BARRIER

SCALE: NTS 32 90 00 ROOT BARRIER.dwg

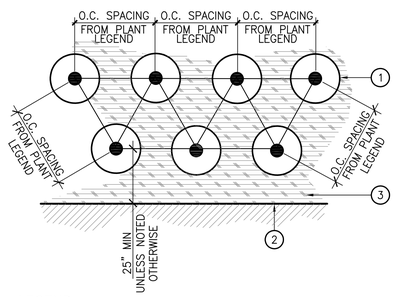

LEGEND

1. SHRUB/GROUNDCOVER – TRIANGULATED ROWS.
2. HARDSCAPE ELEMENT: CURB, WALK, ETC.
3. MULCH PER SPECIFICATIONS.

5 SHRUB/GROUNDCOVER SPACING

SCALE: N.T.S. 32 90 00 SHRUB–GC SPACING.dwg

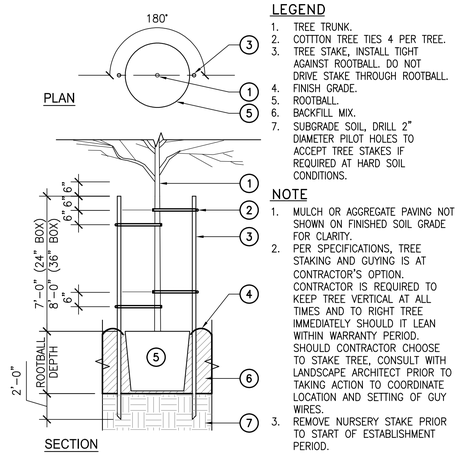

LEGEND

1. TREE TRUNK.
2. COTTTON TREE TIES 4 PER TREE.
3. TREE STAKE, INSTALL TIGHT AGAINST ROOTBALL. DO NOT DRIVE STAKE THROUGH ROOTBALL.
4. FINISH GRADE.
5. ROOTBALL.
6. BACKFILL MIX.
7. SUBGRADE SOIL, DRILL 2" DIAMETER PILOT HOLES TO ACCEPT TREE STAKES IF REQUIRED AT HARD SOIL CONDITIONS.

NOTE

1. MULCH OR AGGREGATE PAVING NOT SHOWN ON FINISHED SOIL GRADE FOR CLARITY.
2. PER SPECIFICATIONS, TREE STAKING AND GUYING IS AT CONTRACTOR'S OPTION. CONTRACTOR IS REQUIRED TO KEEP TREE VERTICAL AT ALL TIMES AND TO RIGHT TREE IMMEDIATELY SHOULD IT LEAN WITHIN WARRANTY PERIOD. SHOULD CONTRACTOR CHOOSE TO STAKE TREE, CONSULT WITH LANDSCAPE ARCHITECT PRIOR TO TAKING ACTION TO COORDINATE LOCATION AND SETTING OF GUY WIRES.
3. REMOVE NURSERY STAKE PRIOR TO START OF ESTABLISHMENT PERIOD.

2 TREE PLANTING - DOUBLE STAKE

SCALE: N.T.S. 32 90 00 TREE – DOUBLE STAKE.dwg

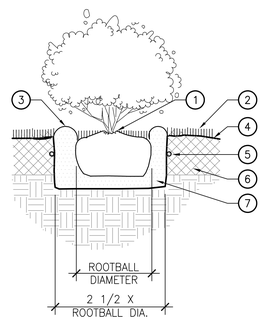

NOTE

1. CONTAINER GROWN SHRUB – LOOSEN ROOTS AT EDGE OF ROOTBALL (EXCEPT BOUGAINVILLEA)
2. RIP SOIL AND PREPARE ENTIRE BED PER SPECIFICATIONS
3. REF. SPECS RE TESTING OF PIT DRAINAGE
4. WIDTH OF PLANTING PIT SHALL NOT BE LESS THAN 1–1/2 TIMES THE WIDTH OF THE ROOTBALL.
5. DEPTH OF PLANTING PIT SHALL NOT BE LESS THAN 1–1/2 TIMES THE DEPTH OF THE ROOTBALL.

LEGEND

1. PLANT SHRUB SO TOP OF THE ROOTBALL IS 1" ABOVE FINISH GRADE.
2. MULCH 2" MIN. DEPTH ENTIRE PLANTING BED REF. SPECS.
3. TEMPORARY WATERING BASIN, FORM SAUCER WITH 3" CONTINUOUS RIM.
4. FINISH GRADE.
5. DRIP IRRIGATION TUBING.
6. CONTINUOUS PREPARED SOIL ZONE REF. SPECS.
7. AMENDED BACK FILL MIXTURE.

3 SHRUB PLANTING

SCALE: N.T.S. SHRUB PLANTING .dwg

IDENTIFICATION STAMP
DIV. OF THE STATE ARCHITECT
APP. 03-119458 INC:
REVIEWED FOR
SS ☑ FLS ☑ ACS ☑
DATE:05/23/2019

DIVISION OF STATE ARCHITECT
355 South Grand Avenue, Suite 2100
Los Angeles, California. 90012
ph: (213) 897-3995 Fax: (213) 897-3159
agency

tBP
architecture
planning
interiors

tBP/Architecture
4611 Teller Avenue
Newport Beach, CA 92660
ph: 949.673.0300 fx: 949.732.3895
architect

AHBE
LANDSCAPE ARCHITECTS
617 WEST SEVENTH STREET
SUITE 304
LOS ANGELES, CA 90017
T: 213.694.3800 F: 213.694.3801
consultant

COMPTON COLLEGE
INSTRUCTIONAL BUILDING No. 2

COMPTON COMMUNITY COLLEGE DISTRICT
1111 E. ARTESIA BLVD. COMPTON, CA.

owner

tBP project number : 20998.00
file name:
drawn by: checked by:
date: 04/08/19

Rev:	date:	description:

THIS DRAWING AND THE DESIGNS, DIRECTIONS, IDEAS AND OTHER INFORMATION CONTAINED HEREIN CONSTITUTE UNPUBLISHED WORK OF tBP/ARCHITECTURE AND SHALL REMAIN THE PROPERTY OF tBP/ARCHITECTURE INCORPORATED. NO PART THEREOF SHALL BE REPRODUCED, DISCLOSED, DISTRIBUTED, SOLD, PUBLISHED OR OTHERWISE USED IN ANY MANNER WITHOUT THE ADVANCED EXPRESS WRITTEN CONSENT OF tBP/ARCHITECTURE.

drawing title:
Landscape Planting Details

drawing no.:
L3.51
drawing of

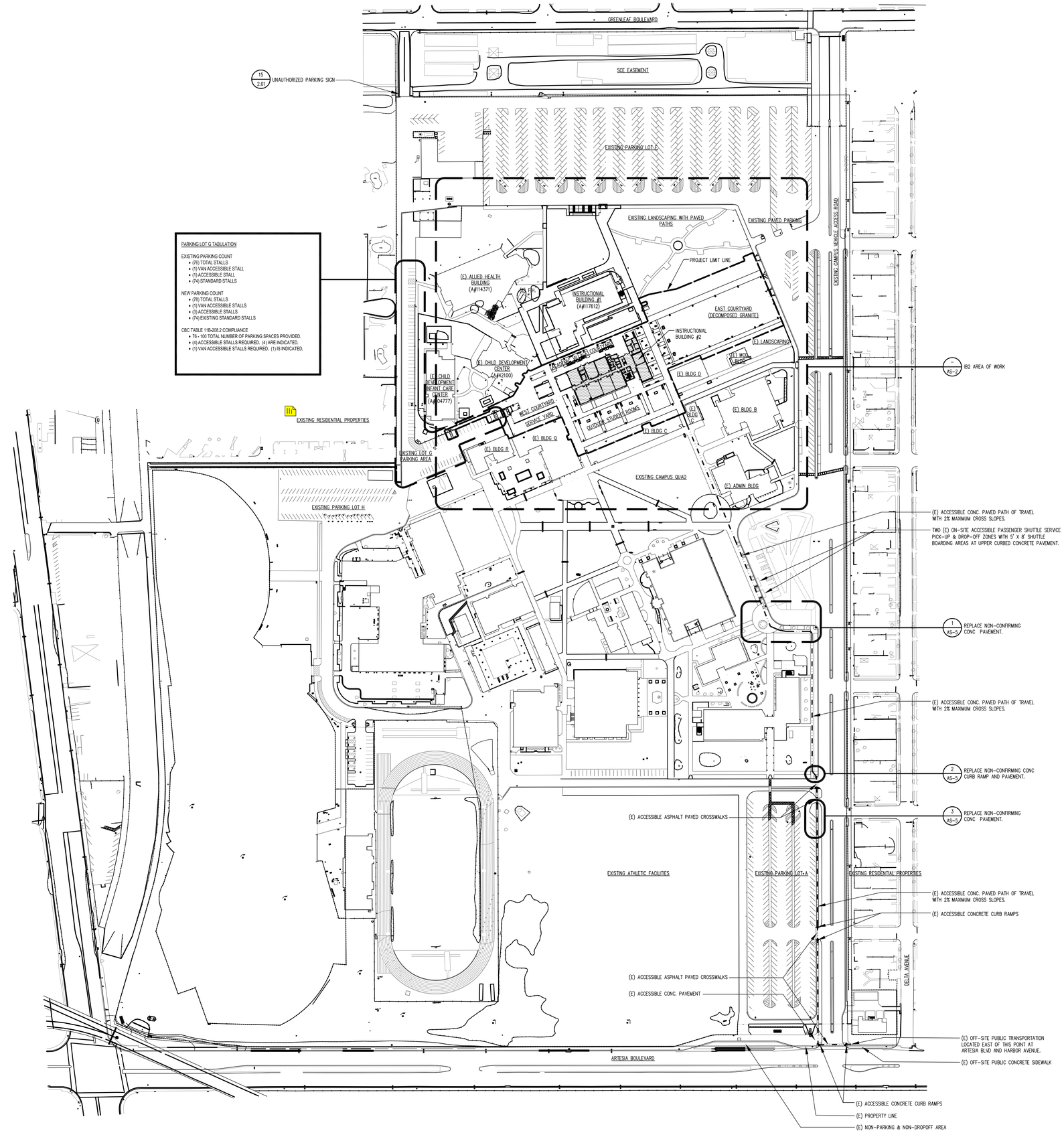

SITE PLAN

SCALE: 1"=100'

GENERAL NOTES

1. VERIFY ALL EXISTING & FINISH GRADES, DIMENSIONS & SITE CONDITIONS BEFORE COMMENCING WORK AND REPORT ANY DISCREPANCIES TO THE ARCHITECT.
2. ALL GRADING WORK SHALL CONFORM TO APPLICABLE PROVISIONS OF THE CALIFORNIA BUILDING CODE, TITLE 24, AND LOCAL CODES OR ORDINANCES. IN THE EVENT OF CONFLICTING PROVISIONS, ALWAYS CONFORM TO THE STRICTER REQUIREMENTS.
3. DETERMINE NECESSARY SUBGRADE ELEVATIONS AND CONSTRUCT SMOOTH TRANSITIONS BETWEEN FINISHED GRADES. FINISHED GRADE ELEVATIONS ADJACENT TO BUILDING PERIMETERS TO BE 6" BELOW FINISHED FLOOR ELEVATIONS, U.N.O.
4. ALL CONCRETE PAVING TO BE MEDIUM BROOM FINISH UNLESS NOTED OTHERWISE.
5. LOCATIONS OF ALL UTILITIES SHOWN ARE APPROXIMATE. CONTRACTOR SHALL EXERCISE EXTREME CAUTION IN EXCAVATING AND TRENCHING TO AVOID INTERCEPTING EXISTING PIPING OR CONDUITS. THE ARCHITECT IS NOT RESPONSIBLE FOR THE LOCATION OF UNDERGROUND UTILITIES OR STRUCTURES WHETHER OR NOT SHOWN OR DETAILED AND INSTALLED BY OTHER CONTRACTS. THE CONTRACTOR SHALL IMMEDIATELY NOTIFY THE OWNER SHOULD SUCH UNIDENTIFIED CONDITIONS BE DISCOVERED. THESE DRAWINGS AND SPECIFICATIONS DO NOT INCLUDE NECESSARY COMPONENTS FOR CONSTRUCTION SAFETY.
6. COMPLY WITH CALIFORNIA FIRE CODE CHAPTER 33 – FIRE SAFETY DURING CONSTRUCTION AND DEMOLITION.
7. CONTRACTOR OPERATIONS SHALL NOT BLOCK, HINDER, IMPEDE OR OTHERWISE INHIBIT THE USE OF REQUIRED EXITS AT ANY TIME. CONTRACTOR SHALL MAINTAIN UNOBSTRUCTED ACCESS TO FIRE EXTINQUISHERS, FIRE HYDRANTS, TEMPORARY FIRE PROTECTION FACILITIES, STAIRWAYS AND OTHER ACCESS ROUTES FOR FIRE FIGHTING EQUIPMENT AND/OR PERSONNEL.

PATH OF TRAVEL DEFINITION

PATH OF TRAVEL (P.O.T.) AS INDICATED IS A BARRIER FREE ACCESS ROUTE WITHOUT ANY ABRUPT VERTICAL CHANGES EXCEEDING 1/2" BEVELED AT 1:2 MAXIMUM SLOPE. EXCEPT THAT LEVEL CHANGES DO NOT EXCEED 1/4" VERTICAL AND IS AT LEAST 48" WIDE. SURFACE IS SLIP RESISTANT, STABLE, FIRM AND SMOOTH. CROSS-SLOPE DOES NOT EXCEED 2% AND SLOPE IN THE DIRECTION OF TRAVEL IS LESS THAN 5% UNLESS OTHERWISE INDICATED. (POT) SHALL BE MAINTAINED FREE OF OVERHANGING OBSTRUCTIONS TO 80" MINIMUM (11B-307) AND PROTRUDING OBJECTS GREATER THAN 4" PROJECTION FROM WALL AND ABOVE 27" AND LESS THAN 80" (11B-307.2). CONTRACTOR TO VERIFY THAT ALL BARRIERS IN THE PATH OF TRAVEL HAVE BEEN REMOVED OR WILL BE REMOVED UNDER THIS PROJECT, AND PATH OF TRAVEL COMPLIES WITH CBC 11B-401.

DESIGN PROFESSIONAL IN GENERAL RESPONSIBLE CHARGE STATEMENT

THE P.O.T. IN THESE CONSTRUCTION DOCUMENTS IS COMPLIANT WITH THE CURRENT APPLICABLE CALIFORNIA BUILDING CODE ACCESSIBILITY PROVISIONS FOR PATH OF TRAVEL REQUIREMENTS FOR ALTERATIONS, ADDITIONS, AND STRUCTURAL REPAIRS. AS PART OF THE DESIGN OF THIS PROJECT, THE P.O.T. WAS EXAMINED AND ANY ELEMENTS, COMPONENTS OR PORTIONS OF THE P.O.T. THAT WERE DETERMINED TO BE NONCOMPLIANT 1) HAVE BEEN IDENTIFIED AND 2) THE CORRECTIVE WORK NECESSARY TO BRING THEM INTO COMPLIANCE HAS BEEN INCLUDED WITHIN THE SCOPE OF THIS PROJECT'S WORK THROUGH DETAILS, DRAWINGS AND SPECIFICATIONS INCORPORATED INTO THESE CONSTRUCTION DOCUMENTS. ANY NONCOMPLIANT ELEMENTS, COMPONENTS OR PORTIONS OF THE P.O.T. THAT WILL NOT BE CORRECTED BY THIS PROJECT BASED ON VALUATION THRESHOLD LIMITATIONS OR A FINDING OF UNREASONABLE HARDSHIP ARE SO INDICATED IN THESE CONSTRUCTION DOCUMENTS.

DURING CONSTRUCTION, IF P.O.T. ITEMS WITHIN THE SCOPE OF WORK OF THE PROJECT REPRESENTED AS CODE COMPLIANT ARE FOUND TO BE NONCONFORMING BEYOND REASONABLE CONSTRUCTION TOLERANCES, THEY SHALL BE BROUGHT INTO COMPLIANCE WITH THE CBC AS A PART OF THIS PROJECT BY MEANS OF A CONSTRUCTION CHANGE DOCUMENT.

ACCESS TO PUBLIC WAY

THE PATH OF TRAVEL (P.O.T.) AS INDICATED PROVIDES DIRECT AND UNOBSTRUCTED ACCESS TO THE EXISTING PUBLIC WAY (ARTESIA BOULEVARD) AND SHALL BE PERMANENTLY MAINTAINED TO BE UNOBSTRUCTED.

IDENTIFICATION STAMP
DIV. OF THE STATE ARCHITECT
APP. 03-119458 INC:
REVIEWED FOR
SS ☑ FLS ☑ ACS ☑
DATE:05/23/2019

DIVISION OF STATE ARCHITECT
355 South Grand Avenue, Suite 2100
Los Angeles, California. 90012
ph: (213) 897-3995 Fax: (213) 897-3159
agency

tBP
architecture
planning
interiors
LICENSED ARCHITECT
JOHN PAIGE MOSLEY
No. C25409
STATE OF CALIFORNIA
tBP/Architecture
4611 Teller Avenue
Newport Beach, CA 92660
ph: 949.673.0300 fx: 949.732.3895
architect

consultant

COMPTON COLLEGE
INSTRUCTIONAL BUILDING No. 2
COMPTON COMMUNITY COLLEGE DISTRICT
1111 E. ARTESIA BLVD. COMPTON, CA.

owner

tBP project number : 20998.00
file name:
drawn by: checked by:
date: 04/08/2019

Rev:	date:	description:

THIS DRAWING AND THE DESIGNS, DEPICTIONS, IDEAS AND OTHER INFORMATION CONTAINED HEREIN CONSTITUTE UNPUBLISHED WORK TO WHICH ARCHITECTURE AND SHALL REMAIN THE PROPERTY OF tBP/ARCHITECTURE IN PERPETUITY. NO PART THEREOF SHALL BE REPRODUCED, DISCLOSED, DISTRIBUTED, SOLD, PUBLISHED OR OTHERWISE USED IN ANY WAY WITHOUT THE ADVANCED EXPRESS WRITTEN CONSENT OF tBP/ARCHITECTURE.

drawing title:
SITE PLAN

drawing no.:
AS-1
drawing of

GENERAL NOTES

1. VERIFY ALL EXISTING & FINISH GRADES, DIMENSIONS & SITE CONDITIONS BEFORE COMMENCING WORK AND REPORT ANY DISCREPANCIES TO THE ARCHITECT.
2. ALL GRADING WORK SHALL CONFORM TO APPLICABLE PROVISIONS OF THE UNIFORM BUILDING CODE, TITLE 24, AND LOCAL CODES OR ORDINANCES. IN THE EVENT OF CONFLICTING PROVISIONS, ALWAYS CONFORM TO THE STRICTER REQUIREMENTS.
3. DETERMINE NECESSARY SUBGRADE ELEVATIONS AND CONSTRUCT SMOOTH TRANSITIONS BETWEEN FINISHED GRADES. FINISHED GRADE ELEVATIONS ADJACENT TO BUILDING PERIMETERS TO BE 6" BELOW FINISHED FLOOR ELEVATIONS, U.N.O.
4. ALL CONCRETE PAVING TO BE MEDIUM BROOM FINISH UNLESS NOTED OTHERWISE.
5. CONTRACTOR TO VERIFY THAT ALL BARRIERS IN THE PATH OF TRAVEL HAVE BEEN REMOVED OR WILL BE REMOVED UNDER THIS PROJECT, AND PATH OF TRAVEL COMPLIES WITH CBC 118-206.
6. LOCATIONS OF ALL UTILITIES SHOWN ARE APPROXIMATE. CONTRACTOR SHALL EXERCISE EXTREME CAUTION IN EXCAVATING AND TRENCHING TO AVOID INTERCEPTING EXISTING PIPING OR CONDUITS. THE ARCHITECT IS NOT RESPONSIBLE FOR THE LOCATION OF UNDERGROUND UTILITIES OR STRUCTURES WHETHER OR NOT SHOWN OR DETAILED AND INSTALLED BY OTHER CONTRACTS. THE CONTRACTOR SHALL IMMEDIATELY NOTIFY THE OWNER SHOULD SUCH UNIDENTIFIED CONDITIONS BE DISCOVERED. THESE DRAWINGS AND SPECIFICATIONS DO NOT INCLUDE NECESSARY COMPONENTS FOR CONSTRUCTION SAFETY.
7. COMPLY WITH CALIFORNIA FIRE CODE CHAPTER 33 – FIRE SAFETY DURING CONSTRUCTION AND DEMOLITION.
8. CONTRACTOR OPERATIONS SHALL NOT BLOCK, HINDER, IMPEDE OR OTHERWISE INHIBIT THE USE OF REQUIRED EXITS AT ANY TIME. CONTRACTOR SHALL MAINTAIN UNOBSTRUCTED ACCESS TO FIRE EXTINGUISHERS, FIRE HYDRANTS, TEMPORARY FIRE PROTECTION FACILITIES, STAIRWAYS AND OTHER ACCESS ROUTES FOR FIRE FIGHTING EQUIPMENT AND/OR PERSONNEL.

EXISTING LOT F PARKING AREA
(E) ACCESSIBLE PARKING (A#113780)
EXISTING PARKING AREA
(E) ALLIED HEALTH BUILDING (A#114371)
CONCRETE PAVING
INSTRUCTIONAL BUILDING #1 (A#117612)
F.H.
(E) F.H.
COORDINATE OVEREXCAVATION WORK WITHIN ADJOINING IB1 PROJECT AND/OR PROVIDE SHORING AT LIMIT OF WORK LINE
(3) OUTDOOR LEARNING AREAS WITH CONC. BENCHES – SEE LANDSCAPE
LANDSCAPING
STAIR #2 UP
ACADEMIC VILLAGE COURTYARD
(E) CONCRETE PAVING
(E) TURF
PROJECT LIMIT LINE
TURF
INSTRUCT. BLDG. #1 ELECT EQUIP.
ELECT. EQUIP. – SEE ELECT.
TYP POLE LIGHT FIXTURES WITH CONCRETE BASE – SEE ELECT.
DECOMPOSED GRANITE SURFACE
EAST COURTYARD
TREES – SEE LANDSCAPE
CONC BENCHES – SEE LANDSCAPE
TYPICAL (E) BLUE PHONE KIOSK
APPROXIMATE LINE OF OVEREXCAVATION FOR BUILDING FOUNDATION
INSTRUCTIONAL BUILDING #2
(4) OUTDOOR STUDENT ROOMS WITH CONC. BENCHES – SEE LANDSCAPE
12" CONC. BOARDERS ALONG BLDG PERIMETER WITHOUT PAVEMENT– TYP.
(E) ROOF SUPPORTS AND CONCRETE PAVING
(E) MODULAR BUILDING
(E) CHILD DEVELOPMENT CENTER (A#42100)
(E) BLUE PHONE KIOSK WITH 30"X48" CLEAR SPACE AT CONC PAVED CONTROL AREA WITH CONTROLS AT 42" ABOVE FINISH SURFACE (TYP)
ACCESSIBLE PATH OF TRAVEL
(E) CHILD DEVELOPMENT INFANT CARE CENTER (A#104777)
P.A.
F.H.
POETRY YARD
WEST COURTYARD (CONCRETE PAVEMENT)
(E) EAST BUILDING D (A#13874, A#38240, A#41469, & A#53219)
(E) ASPHALT PAVING
(2) ACCESSIBLE PARKING SPACES WITH CURB RAMP
VENDING MACHINES ON CONC PAD BELOW STAIR (SEE ARCH FLOOR PLAN)
F.S.C.
STAIR #3 UP
(4) OUTDOOR STUDENT ROOMS WITH CONC. BENCHES – SEE LANDSCAPE
(E) EAST BUILDING C (A#13874)
(E) BUILDING B
SERVICE YARD (CONCRETE PAVEMENT)
TRASH ENCLOSURE
REPAIR (E) BLDGS C, D, AND Q AT DEMOLISHED ROOF STRUCTURES
(E) EQUIP. PADS
EXISTING ASPHALT PAVED STRIPED PARKING AREA
EXISTING ASPHALT PAVED DRIVE AISLE
PARKING LOT G
BRICK MASONRY WALLS AT SERVICE YARD, TRASH ENCLOSURE, AND POETRY YARD
(E) BUILDING R (A#24501)
(E) WEST BUILDING C (A#13874 & A#38240)
EXISTING PATH OF TRAVEL. SEE SHEET AS-1 FOR CONTINUATION TO (E) ON-SITE SHUTTLE ZONE AND (E) OFF-SITE PUBLIC TRANSPORTATION
CONCRETE PAVING
(E) BUILDING Q (A#24501)
(E) ROOF ACCESS STRUCTURE.
SEE CIVIL FOR WORK IN THIS AREA
EXISTING CAMPUS QUAD
(E) ADMINISTRATION BUILDING
(E) CONCRETE PAVING
(E) F.H.

0 7.5' 15' 30' 60'

ENLARGED SITE PLAN

SCALE: 1"=30'

NORTH

DIVISION OF STATE ARCHITECT
355 South Grand Avenue, Suite 2100
Los Angeles, California. 90012
ph: (213) 897-3995 Fax: (213) 897-3159
agency

tBP architecture planning interiors

LICENSED ARCHITECT — KIRK PAIGE JOHNS — No. C25409 — STATE OF CALIFORNIA

tBP/Architecture
4611 Teller Avenue
Newport Beach, CA 92660
ph: 949.673.0300 fx: 949.732.3895
architect

consultant

COMPTON COLLEGE
INSTRUCTIONAL BUILDING No. 2

COMPTON COMMUNITY COLLEGE DISTRICT
1111 E. ARTESIA BLVD. COMPTON, CA.

owner

tBP project number : 20998.00
file name:
drawn by: checked by:
date: 04/08/2019

Rev:	date:	description:

THESE DRAWINGS AND SPECIFICATIONS AS INSTRUMENTS OF SERVICE ARE AND SHALL REMAIN THE PROPERTY OF THE ARCHITECT WHETHER THE PROJECT FOR WHICH THEY ARE MADE IS EXECUTED OR NOT. THEY ARE NOT TO BE USED IN WHOLE OR IN PART FOR ANY OTHER PROJECT WITHOUT THE WRITTEN PERMISSION OF THE ARCHITECT. ALL REPRODUCTIONS OF THESE DRAWINGS AND SPECIFICATIONS, ALL ARCHITECTURAL WORKS AND ALL ARCHITECTURAL DESIGNS MUST BEAR A VALID COPYRIGHT NOTICE IN FAVOR OF THE ARCHITECT. IT IS THE RESPONSIBILITY OF THE RECIPIENT TO ENSURE THAT THE ARCHITECT'S RIGHTS ARE PROTECTED. ALL RIGHTS RESERVED. UNPUBLISHED COPYRIGHT. SOLE PURPOSE OF DISTRIBUTION LIMITED TO THOSE WHO HAVE SIGNED THE ARCHITECT'S EXPRESS PERMISSION LETTER OF AGREEMENT.

drawing title:
ENLARGED SITE PLAN

drawing no.:
AS-2
drawing of

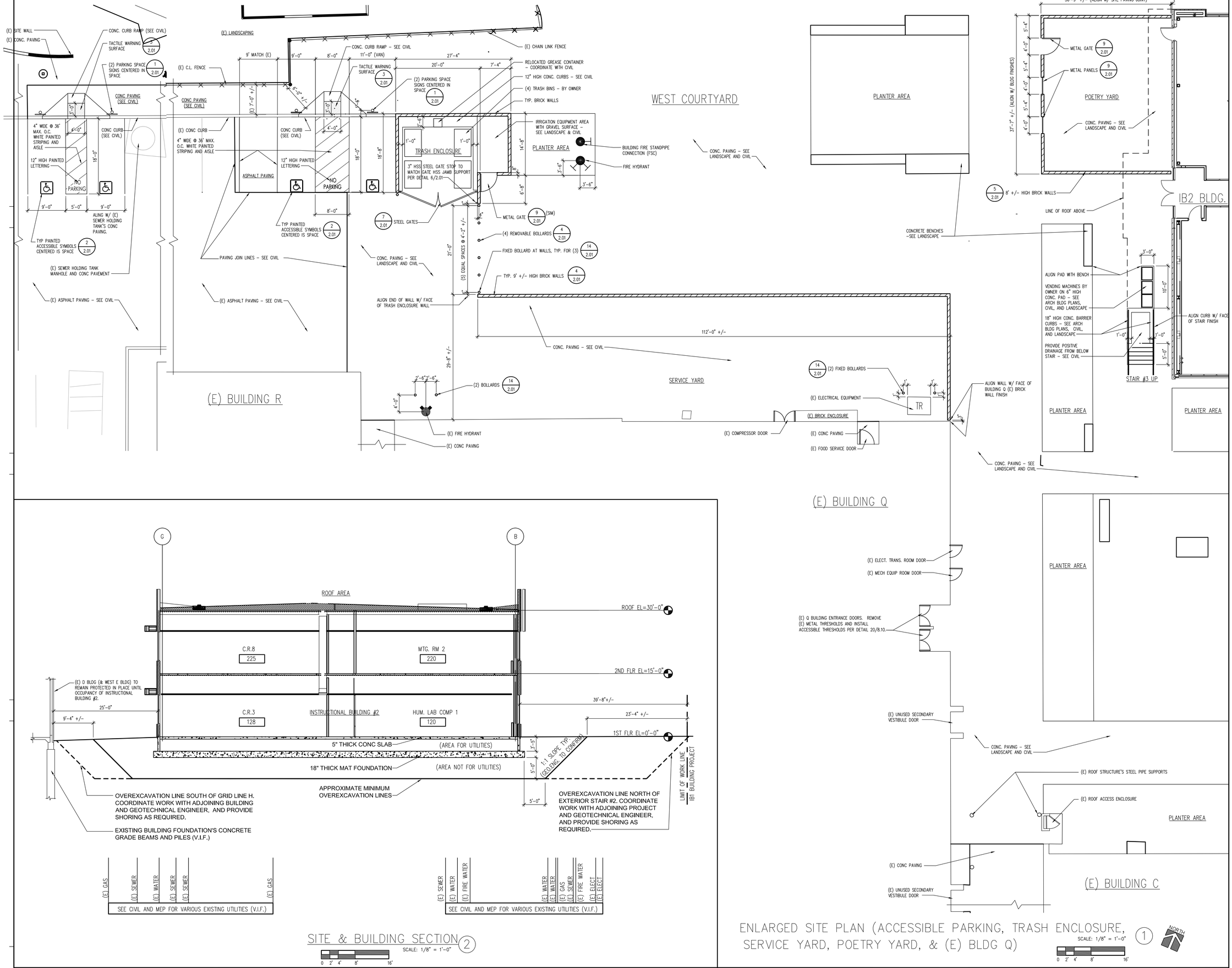

SITE & BUILDING SECTION 2
SCALE: 1/8" = 1'-0"
0 2' 4' 8' 16'

ENLARGED SITE PLAN (ACCESSIBLE PARKING, TRASH ENCLOSURE, SERVICE YARD, POETRY YARD, & (E) BLDG Q) 1
SCALE: 1/8" = 1'-0"
0 2' 4' 8' 16'
NORTH

IDENTIFICATION STAMP
DIV. OF THE STATE ARCHITECT
APP. 03-119458 INC:
REVIEWED FOR
SS ☑ FLS ☑ ACS ☑
DATE:05/23/2019

DIVISION OF STATE ARCHITECT
355 South Grand Avenue, Suite 2100
Los Angeles, California. 90012
ph: (213) 897-3995 Fax: (213) 897-3159
agency

tBP architecture planning interiors
LICENSED ARCHITECT CHRISTOPHER BLOOD No. C25409 REN. 7-31-19 STATE OF CALIFORNIA
tBP/Architecture
4611 Teller Avenue
Newport Beach, CA 92660
ph: 949.673.0300 fx: 949.732.3895
architect

consultant

COMPTON COLLEGE
INSTRUCTIONAL BUILDING No. 2

COMPTON COMMUNITY COLLEGE DISTRICT
1111 E. ARTESIA BLVD. COMPTON, CA.

owner

tBP project number : 20998.00
file name:
drawn by: checked by:
date: 04/08/2019

Rev:	date:	description:

THE DRAWINGS AND THE SEQUENCE, DEPICTIONS, IDEAS AND OTHER INFORMATION CONTAINED HEREIN CONSTITUTE UNPUBLISHED WORK OF tBP/ARCHITECTURE AND SHALL REMAIN THE PROPERTY OF tBP/ARCHITECTURE IN PERPETUITY. NO PART THEREOF SHALL BE REPRODUCED, DISCLOSED, DISTRIBUTED, SOLD, PUBLISHED OR OTHERWISE USED IN ANY WAY WITHOUT THE ADVANCE EXPRESS WRITTEN CONSENT OF tBP/ARCHITECTURE.

drawing title:
ENLARGED SITE PLAN & SECTION

drawing no.:
AS-3
drawing of

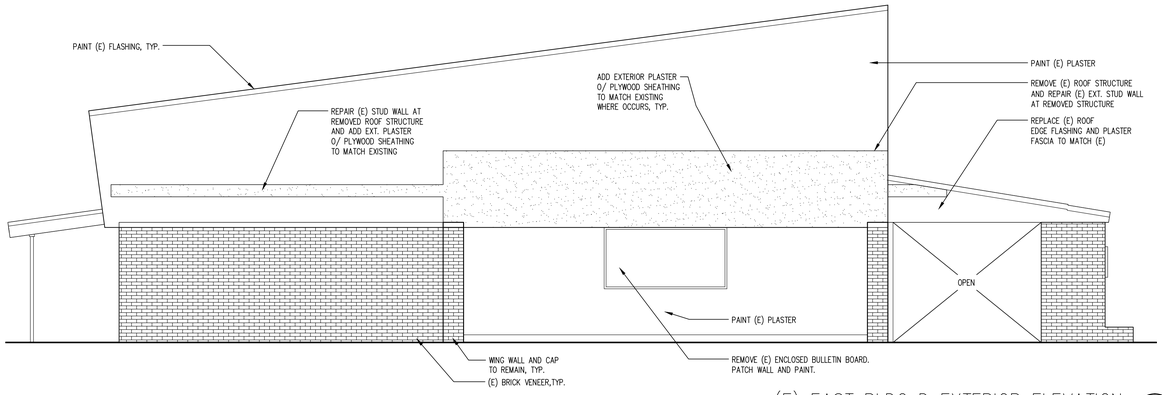

(E) EAST BLDG D EXTERIOR ELEVATION 3

1/4" = 1'-0"

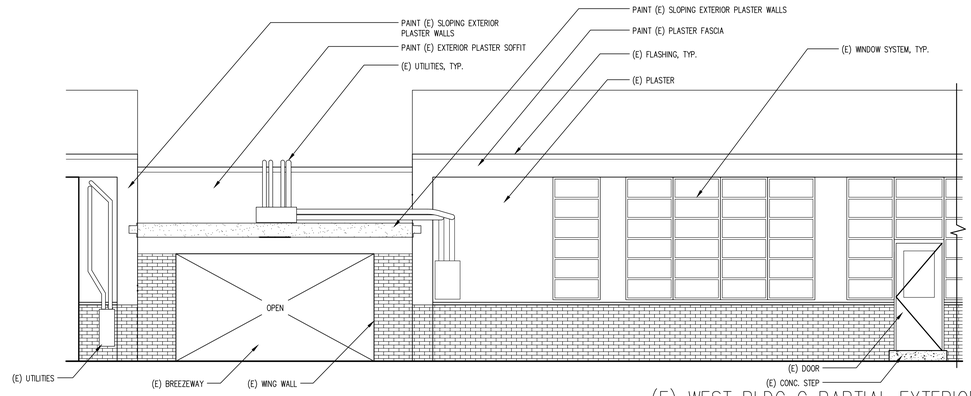

(E) WEST BLDG C PARTIAL EXTERIOR ELEVATION 4

1/4" = 1'-0"

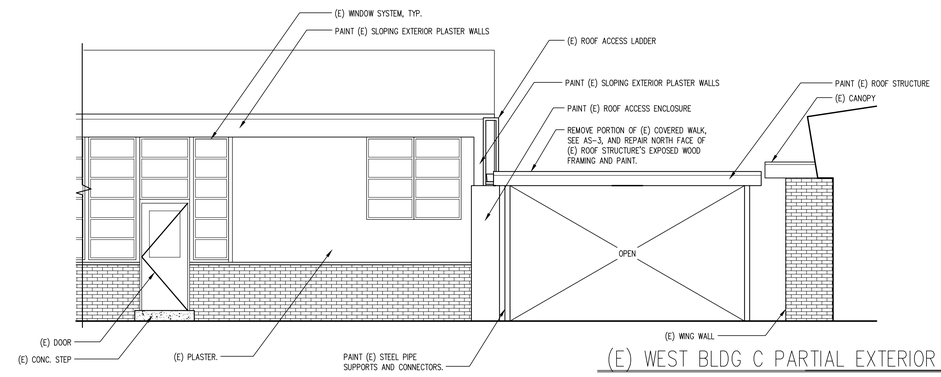

(E) WEST BLDG C PARTIAL EXTERIOR ELEVATION 5

1/4" = 1'-0"

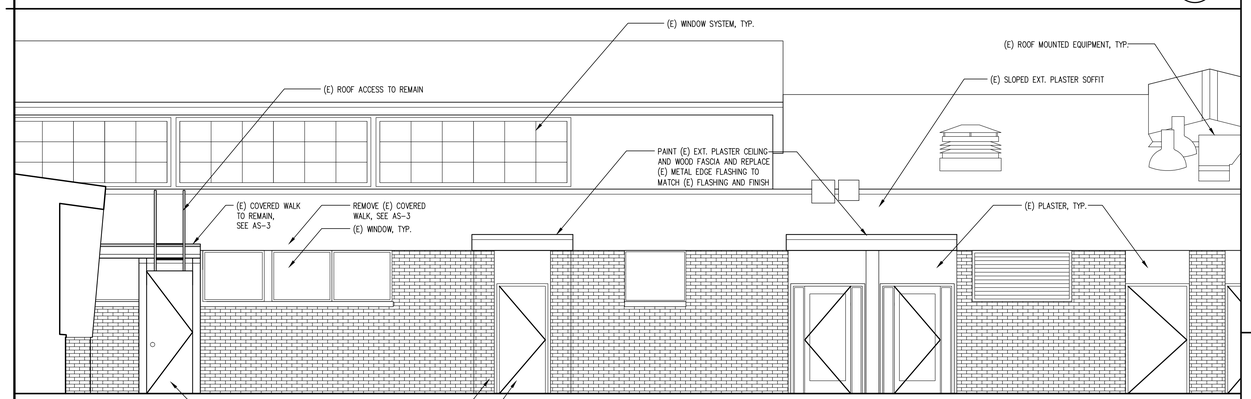

(E) BLDG Q EXTERIOR ELEVATION 6

1/4" = 1'-0"

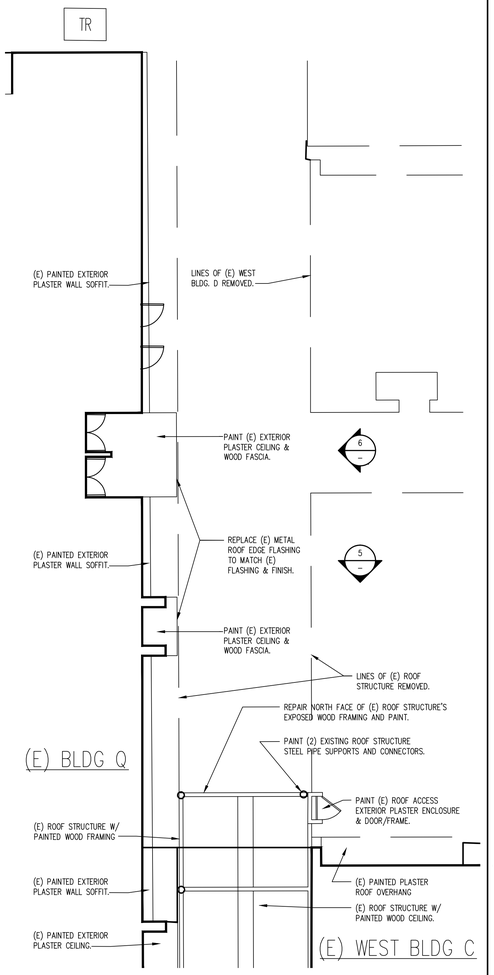

SOUTHWEST (E) EXTERIOR CLG PLAN 1

SCALE: 1/8" = 1'-0"

0 2' 4' 8' 16'

NORTH

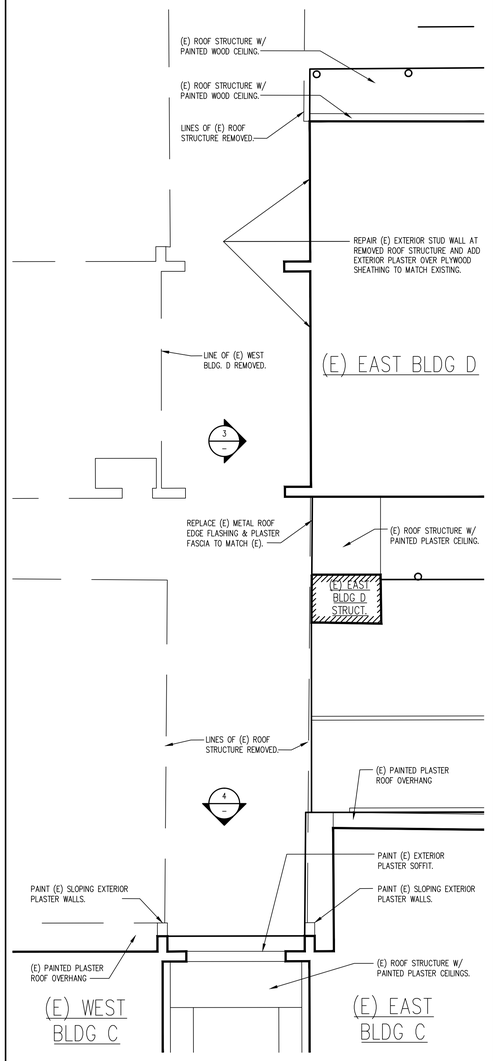

SOUTHEAST (E) EXTERIOR CLG PLAN 2

SCALE: 1/8" = 1'-0"

0 2' 4' 8' 16'

NORTH

IDENTIFICATION STAMP
DIV. OF THE STATE ARCHITECT
APP. 03-119458 INC:
REVIEWED FOR
SS ☑ FLS ☑ ACS ☑
DATE:05/23/2019

DIVISION OF STATE ARCHITECT
355 South Grand Avenue, Suite 2100
Los Angeles, California. 90012
ph: (213) 897-3995 Fax: (213) 897-3159
agency

tBP
architecture
planning
interiors

LICENSED ARCHITECT
CRAIG PAIGE BOSH
No. C25409
REN. 7-31-13
STATE OF CALIFORNIA

tBP/Architecture
4611 Teller Avenue
Newport Beach, CA 92660
ph: 949.673.0300 fx: 949.732.3895
architect

consultant

COMPTON COLLEGE
INSTRUCTIONAL BUILDING No. 2

COMPTON COMMUNITY COLLEGE DISTRICT
1111 E. ARTESIA BLVD. COMPTON, CA.

owner

tBP project number : 20998.00

file name:

drawn by: checked by:

date: 04/08/2019

Rev:	date:	description:

THE DRAWING AND THE DESIGNS, DEFINITIONS, IDEAS AND OTHER INFORMATION CONTAINED HEREIN FORM CONSTITUTE UNPUBLISHED WORK OF TBP/ARCHITECTURE AND SHALL REMAIN THE PROPERTY OF TBP/ARCHITECTURE IN PERPETUITY, NO PART THEREOF SHALL BE REPRODUCED, DISCLOSED, DISTRIBUTED, SOLD, PUBLISHED OR OTHERWISE USED IN ANY WAY WITHOUT THE ADVANCED EXPRESS WRITTEN CONSENT OF TBP/ARCHITECTURE.

drawing title:
EXIST. EXT. CLG. PLANS & EXT. ELEVATIONS

drawing no.:
AS-4
drawing of

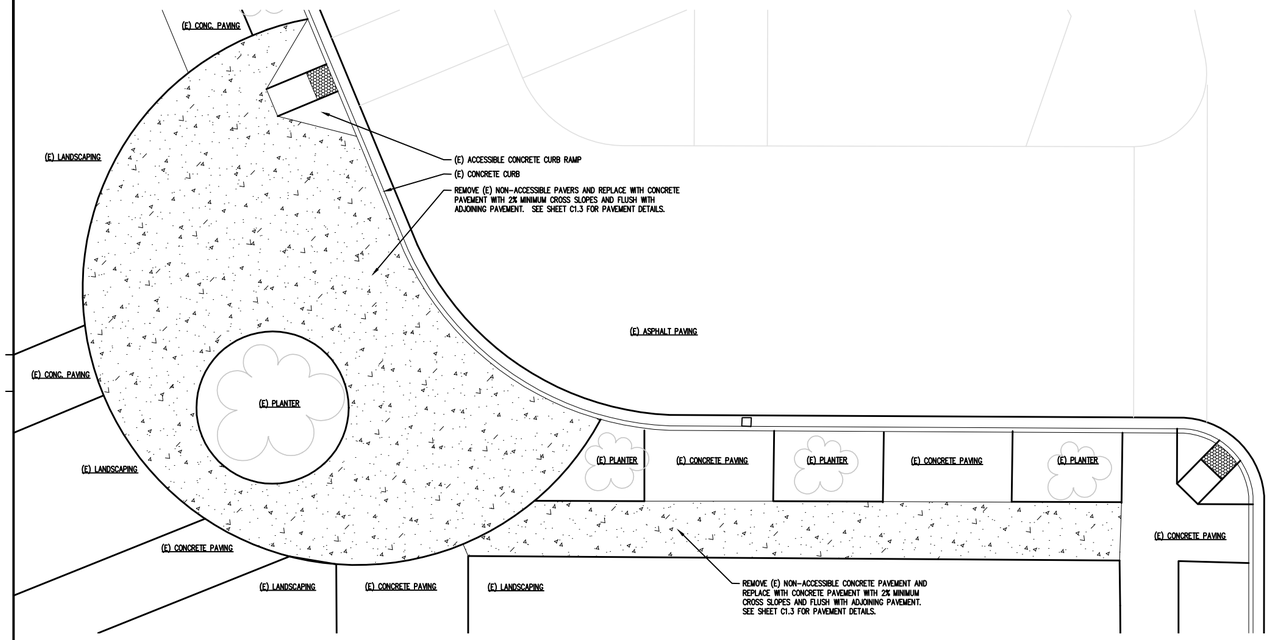

ENLARGED SITE PLAN – ACCESSIBLE UPGRADES 1

NORTH

SCALE: 1/8" = 1'-0"

0 2' 4' 8' 16'

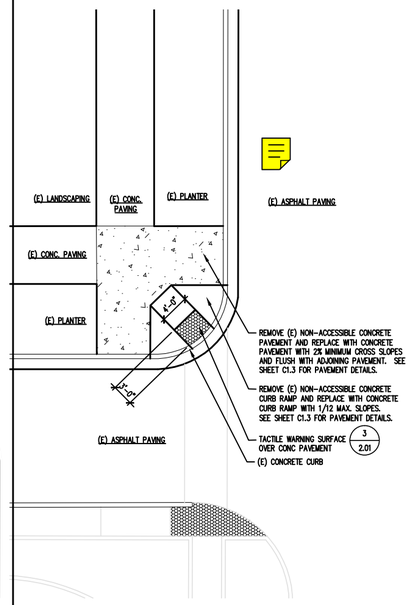

ENLARGED SITE PLAN
ACCESSIBLE UPGRADES 2

NORTH

SCALE: 1/8" = 1'-0"

0 2' 4' 8' 16'

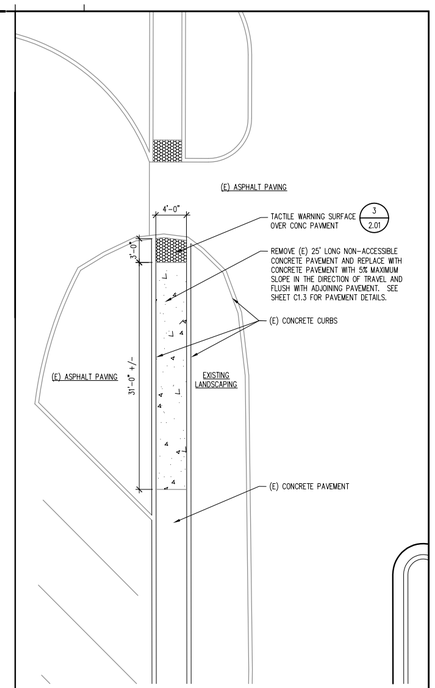

ENLARGED SITE PLAN
ACCESSIBLE UPGRADES 3

NORTH

SCALE: 1/8" = 1'-0"

0 2' 4' 8' 16'

DIVISION OF STATE ARCHITECT
355 South Grand Avenue, Suite 2100
Los Angeles, California. 90012
ph: (213) 897-3995 Fax: (213) 897-3159
agency

tBP
architecture
planning
interiors

LICENSED ARCHITECT
CHRISTOPHER BLAKE ROSS
No. C25409
REN. 7-31-19
STATE OF CALIFORNIA

tBP/Architecture
4611 Teller Avenue
Newport Beach, CA 92660
ph: 949.673.0300 fx: 949.732.3895
architect

consultant

COMPTON COLLEGE
INSTRUCTIONAL BUILDING No. 2

COMPTON COMMUNITY COLLEGE DISTRICT
1111 E. ARTESIA BLVD. COMPTON, CA.

owner

tBP project number : 20998.00

file name:

drawn by: checked by:

date: 04/08/2019

Rev:	date:	description:

drawing title:
ENLARGED SITE PLANS

drawing no.:
AS-5

drawing of

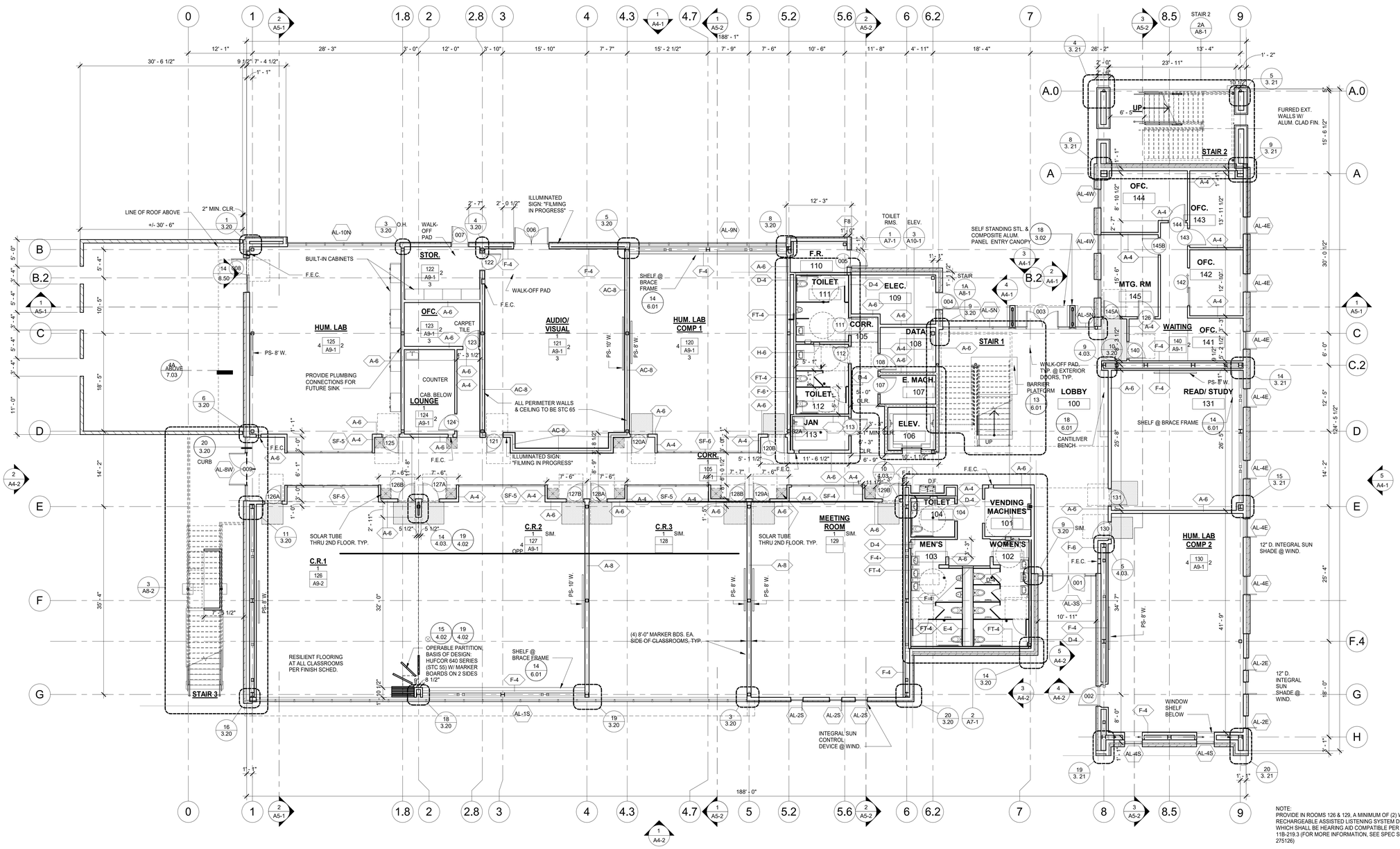

NOTE:
PROVIDE IN ROOMS 126 & 129, A MINIMUM OF (2) WIRELESS RECHARGEABLE ASSISTED LISTENING SYSTEM DEVICES WHICH SHALL BE HEARING AID COMPATIBLE PER CBC 11B-219.3 (FOR MORE INFORMATION, SEE SPEC SECTION 275126)

NORTH

0' 2' 4' 8' 16'

FIRST FLOOR PLAN 9

SCALE 1/8" = 1'-0"

LEGEND

NOTE: REFER TO SHEET T-2 FOR ADDITIONAL SYMBOLS

Room name	ROOM SYMBOL
101	ROOM NUMBER
A10-X	INTERIOR ELEVATION NUMBER
3	SHEET NUMBER
131	DOOR TAG, SEE SHEET 8.01
1i	WINDOW TAG, SEE SHEETS 8.50, 8.51 AND CW SHEETS
1A	WALL TYPE, SEE SHEET 4.01
XXX-X	MATERIAL SYMBOL, SEE FINISH & COLOR SCHEDULES, SHEET 9.01
F.E.C	FIRE EXTINGUISHER CABINET LOCATION, TRAVEL DIST. FROM ANYWHERE IN BLDG. TO A FIRE EXTINGUISHER LOCATION SHALL NOT EXCEED 75' PER CFC SECT. 906, TABLE 2 (12 / 4.02)
F.D. D.D.	FLOOR DRAIN, DECK DRAIN
	1 HR RATED WALL (8 / 4.02) (9 / 4.02)
MB - 8' W.	MARKER BOARD (MB) OR TACKBOARD (TB) AND SIZE
PS - 6' W.	PROJECTION SCREEN PER (10 / 5.02)
GEO-1	GEO TILE AT INTERIOR ENTRY DOORS AS INDICATED
SST-3	RECESSED STAINLESS STL. ENTRANCE FLOOR GRILLE (16 / 8.11) (17 / 8.11)

4/10/2019 11:29:48 AM

IDENTIFICATION STAMP
DIV. OF THE STATE ARCHITECT
APP. 03-119458 INC:
REVIEWED FOR
SS ☑ FLS ☑ ACS ☑
DATE: 05/23/2019

DIVISION OF THE STATE ARCHITECT
355 South Grand Avenue, Suite 2100
Los Angeles, CA 90012
ph: (213) 897-3995 fx:(213) 897-3159

agency

tBP architecture planning interiors

LICENSED ARCHITECT GARY PAIGE MOSHI NO. C25409 REN. 7-31-19 STATE OF CALIFORNIA

tBP/Architecture
4611 Teller Avenue
Newport Beach, CA 92660
ph: 949.673.0300 fx: 949.732.3895

architect

consultant

COMPTON COLLEGE
INSTRUCTIONAL BUILDING No.2

COMPTON COMMUNITY COLLEGE DISTRICT
1111 E. ARTESIA BLVD. COMPTON, CA.

owner

tBP project number: 20998.00
file name:
drawn by: checked by:
date: 04/08/2019

rev:	date:	description:

THIS DRAWING AND THE DESIGNS, DEPICTIONS, IDEAS AND OTHER INFORMATION CONTAINED HEREIN CONSTITUTE UNPUBLISHED WORK OF tBP/ARCHITECTURE AND SHALL REMAIN PROPERTY OF tBP/ARCHITECTURE IN PERPETUITY. NO PART THEREOF SHALL BE REPRODUCED, DISCLOSED, DISTRIBUTED, SOLD, PUBLISHED OR OTHERWISE USED IN ANY WAY WITHOUT THE ADVANCED EXPRESS WRITTEN CONSENT OF tBP/ARCHITECTURE.

drawing title:
FLOOR PLAN - FIRST FLOOR

drawing no.:
A1-1

drawing of

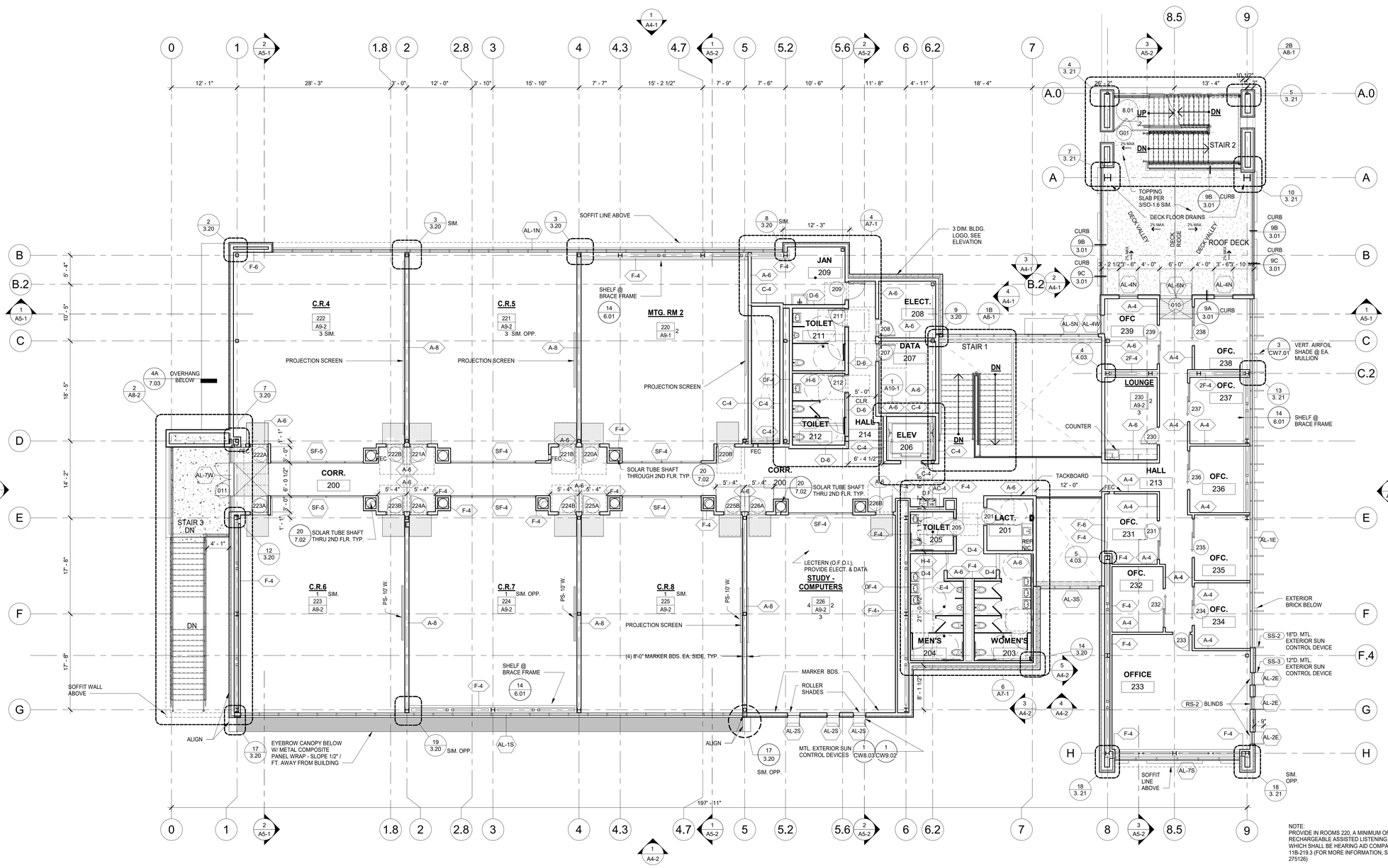

SECOND FLOOR PLAN 1

SCALE 1/8" = 1'-0"

LEGEND

NOTE: REFER TO SHEET T-2 FOR ADDITIONAL SYMBOLS

Room name	ROOM SYMBOL
1 / 101 / A10-X / 3	ROOM NUMBER INTERIOR ELEVATION NUMBER SHEET NUMBER
131	DOOR TAG, SEE SHEET 8.01
1i	WINDOW TAG, SEE SHEETS 8.50, 8.51 AND CW SHEETS
1A	WALL TYPE, SEE SHEET 4.01
XXX-X	MATERIAL SYMBOL, SEE FINISH & COLOR SCHEDULES, SHEET 9.01
F.E.C	FIRE EXTINGUISHER CABINET LOCATION. TRAVEL DIST. FROM ANYWHERE IN BLDG. TO A FIRE EXTINGUISHER LOCATION SHALL NOT EXCEED 75' PER CFC SECT. 906, TABLE 2 (12 / 4.02)
F.D. D.D.	FLOOR DRAIN, DECK DRAIN
	1 HR RATED WALL (8 / 4.02) (9 / 4.02)
MB - 8' W.	MARKER BOARD (MB) OR TACKBOARD (TB) AND SIZE
PS - 6' W.	PROJECTION SCREEN PER (10 / 5.02)
GEO-1	GEO TILE AT INTERIOR ENTRY DOORS AS INDICATED
SST-3	RECESSED STAINLESS STL. ENTRANCE FLOOR GRILLE (16 / 8.11) (17 / 8.11)

4/10/2019 11:29:52 AM

IDENTIFICATION STAMP
DIV. OF THE STATE ARCHITECT
APP. 03-119458 INC:
REVIEWED FOR
SS ☑ FLS ☑ ACS ☑
DATE:05/23/2019

DIVISION OF THE STATE ARCHITECT
355 South Grand Avenue, Suite 2100
Los Angeles, CA 90012
ph: (213) 897-3995 fx:(213) 897-3159

agency

tBP architecture planning interiors

LICENSED ARCHITECT JEFFREY PAIGE MOSHIER No. C25409 STATE OF CALIFORNIA

tBP/Architecture
4611 Teller Avenue
Newport Beach, CA 92660
ph: 949.673.0300 fx: 949.732.3895

architect

consultant

COMPTON COLLEGE
INSTRUCTIONAL BUILDING No.2
COMPTON COMMUNITY COLLEGE DISTRICT
1111 E. ARTESIA BLVD. COMPTON, CA.

owner

tBP project number: 20998.00
file name:
drawn by: checked by:
date: 04/08/2019

rev:	date:	description:

THIS DRAWING AND THE DESIGN, INFORMATION, IDEAS AND OTHER INFORMATION CONTAINED HEREIN CONSTITUTE UNPUBLISHED WORK BY tBP/ARCHITECTURE AND SHALL REMAIN PROPERTY OF tBP/ARCHITECTURE IN PERPETUITY. NO PART THEREOF SHALL BE REPRODUCED, DISCLOSED, DISTRIBUTED, SOLD, PUBLISHED OR OTHERWISE USED IN ANY WAY WITHOUT THE ADVANCED EXPRESS WRITTEN CONSENT OF tBP/ARCHITECTURE.

drawing title:
FLOOR PLAN - SECOND FLOOR

drawing no.:
A1-2

drawing of

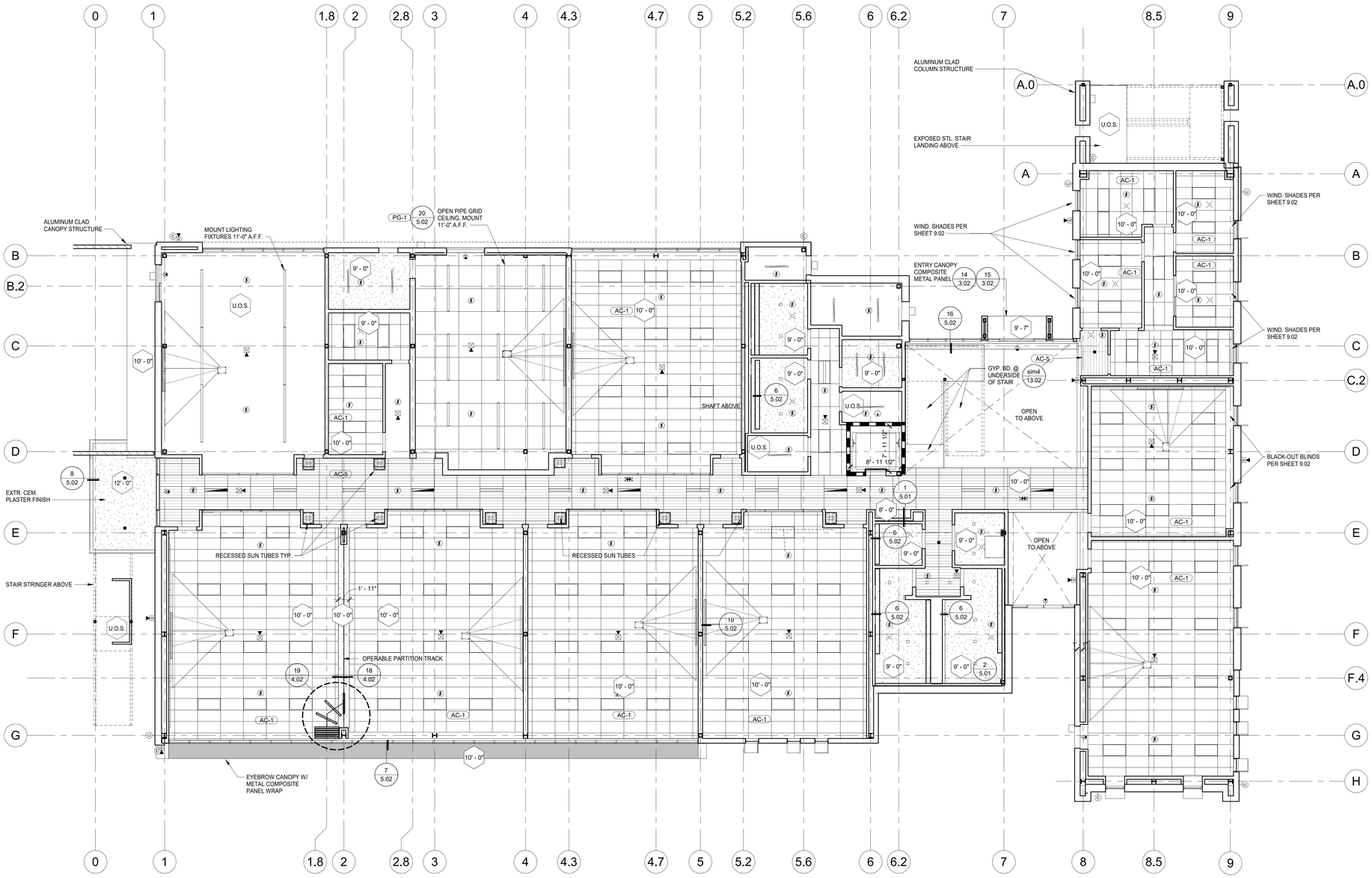

1ST FLOOR REFLECTED CEILING PLAN 1

SCALE 1/8" = 1'-0"

LEGEND

12'-0"	CEILING HEIGHT ABOVE FIN. FLOOR SYMBOL
AC-5	2x4 SUSPENDED ACOUSTICAL PANEL CEILING W/ 6" LINEAR PATTERN, BASIS OF DESIGN: ARMSTRONG CIRRUS SECOND LOOK iii-511 (8 / 5.01)
AC-1	2x4 SUSPENDED ACOUSTICAL PANEL CEILING (8 / 5.01)
PG-1	OPEN SUSPENDED PIPE BATTEN SYSTEM, FABRICATED FROM 2.5" SCHEDULE 50 STEEL PIPE @ 48" O.C. MAX. EA. WAY, W/ STL. SUPPORTS/CLAMPS, PAINT BLACK (20 / 5.02)
	FRAMED GYPSUM BOARD CEILING (2 / 5.01)
	FRAMED PLASTER SOFFIT ON METAL STUDS (12 / 5.02) (13 / 5.02)
U.O.S.	EXPOSED UNDERSIDE OF STRUCTURE
	EXIT SIGN PER ELECTRICAL DWGS.
	PENDANT LIGHT FIXTURE
	2' X 4' LIGHT FIXTURE PER ELECTRICAL DWGS.
	6" X 8'-0" RECESSED LINEAR LIGHT FIXTURE PER ELECTRICAL DWGS.
	4" X 4'-0" SUSPENDED LINEAR LIGHT FIXTURE PER ELECTRICAL DWGS.
	CEILING-MOUNT PROJECTOR (5 / 5.02)
PS	PROJECTION SCREEN, SEE FLOOR PLAN FOR SIZE (10 / 5.02)
	RECESSED SUN TUBE TO ROOF (20 / 7.02)
	AIR SUPPLY DIFFUSER
	AIR RETURN DIFFUSER
	30X30 ACCESS PANEL TYP (17 / 5.02)

4/10/2019 11:29:58 AM

IDENTIFICATION STAMP
DIV. OF THE STATE ARCHITECT
APP. 03-119458 INC:
REVIEWED FOR
SS ☑ FLS ☑ ACS ☑
DATE:05/23/2019

DIVISION OF THE STATE ARCHITECT
355 South Grand Avenue, Suite 2100
Los Angeles, CA 90012
ph: (213) 897-3995 fx:(213) 897-3159

agency

tBP architecture planning interiors

LICENSED ARCHITECT
CARY PAIGE MOON
NO. C25409
REN. 7-31-11
STATE OF CALIFORNIA

tBP/Architecture
4611 Teller Avenue
Newport Beach, CA 92660
ph: 949.673.0300 fx: 949.732.3895

architect

consultant

COMPTON COLLEGE
INSTRUCTIONAL BUILDING No.2

COMPTON COMMUNITY COLLEGE DISTRICT
1111 E. ARTESIA BLVD. COMPTON, CA.

owner

tBP project number: 20998.00
file name:
drawn by: checked by:
date: 04/08/2019

rev:	date:	description:

THIS DRAWING AND THE DESIGNS, DEPICTIONS, IDEAS AND OTHER INFORMATION CONTAINED HEREIN CONSTITUTE UNPUBLISHED WORK OF tBP/ARCHITECTURE AND SHALL REMAIN PROPERTY OF tBP/ARCHITECTURE IN PERPETUITY. NO PART THEREOF SHALL BE REPRODUCED, DISCLOSED, DISTRIBUTED, SOLD, PUBLISHED OR OTHERWISE USED IN ANY WAY WITHOUT THE ADVANCED EXPRESS WRITTEN CONSENT OF tBP/ARCHITECTURE.

drawing title:
REFLECTED CEILING PLAN - FIRST FLOOR

drawing no.:
A2-1

drawing of

LEGEND

12'-0"	CEILING HEIGHT ABOVE FIN. FLOOR SYMBOL
AC-5	2x4 SUSPENDED ACOUSTICAL PANEL CEILING W/ 6" LINEAR PATTERN, BASIS OF DESIGN: ARMSTRONG CIRRUS SECOND LOOK iii-511 (8 / 5.01)
AC-1	2x4 SUSPENDED ACOUSTICAL PANEL CEILING (8 / 5.01)
PG-1	OPEN SUSPENDED PIPE BATTEN SYSTEM, FABRICATED FROM 2.5" SCHEDULE 50 STEEL PIPE @ 48" O.C. MAX. EA. WAY, W/ STL. SUPPORTS/CLAMPS, PAINT BLACK (20 / 5.02)
	FRAMED GYPSUM BOARD CEILING (2 / 5.01)
	FRAMED PLASTER SOFFIT ON METAL STUDS (12 / 5.02) (13 / 5.02)
U.O.S.	EXPOSED UNDERSIDE OF STRUCTURE
	EXIT SIGN PER ELECTRICAL DWGS.
	PENDANT LIGHT FIXTURE
	2' X 4' LIGHT FIXTURE PER ELECTRICAL DWGS.
	6" X 8'-0" RECESSED LINEAR LIGHT FIXTURE PER ELECTRICAL DWGS.
	4" X 4'-0" SUSPENDED LINEAR LIGHT FIXTURE PER ELECTRICAL DWGS.
	CEILING-MOUNT PROJECTOR (5 / 5.02)
PS	PROJECTION SCREEN, SEE FLOOR PLAN FOR SIZE (10 / 5.02)
	RECESSED SUN TUBE TO ROOF (20 / 7.02)
	AIR SUPPLY DIFFUSER
	AIR RETURN DIFFUSER
	30X30 ACCESS PANEL TYP (17 / 5.02)

IDENTIFICATION STAMP
DIV. OF THE STATE ARCHITECT
APP. 03-119458 INC:
REVIEWED FOR
SS ☑ FLS ☑ ACS ☑
DATE:05/23/2019

DIVISION OF THE STATE ARCHITECT
355 South Grand Avenue, Suite 2100
Los Angeles, CA 90012
ph: (213) 897-3995 fx:(213) 897-3159

agency

tBP architecture planning interiors

LICENSED ARCHITECT GARY PAIGE MOON NO. C25409 REN. 7-31-19 STATE OF CALIFORNIA

tBP/Architecture
4611 Teller Avenue
Newport Beach, CA 92660
ph: 949.673.0300 fx: 949.732.3895

architect

consultant

COMPTON COLLEGE
INSTRUCTIONAL BUILDING No.2
COMPTON COMMUNITY COLLEGE DISTRICT
1111 E. ARTESIA BLVD. COMPTON, CA.

owner

tBP project number: 20998.00
file name:
drawn by: checked by:
date: 04/08/2019

rev:	date:	description:

THIS DRAWING AND THE DESIGNS, DEPICTIONS, IDEAS AND OTHER INFORMATION CONTAINED HEREIN CONSTITUTE UNPUBLISHED WORK OF tBP/ARCHITECTURE AND SHALL REMAIN PROPERTY OF tBP/ARCHITECTURE IN PERPETUITY. NO PART THEREOF SHALL BE REPRODUCED, DISCLOSED, DISTRIBUTED, SOLD, PUBLISHED OR OTHERWISE USED IN ANY WAY WITHOUT THE ADVANCED EXPRESS WRITTEN CONSENT OF tBP/ARCHITECTURE.

drawing title:
REFLECTED CEILING PLAN - SECOND FLR.

drawing no.:
A2-2

drawing of

4/10/2019 11:30:04 AM

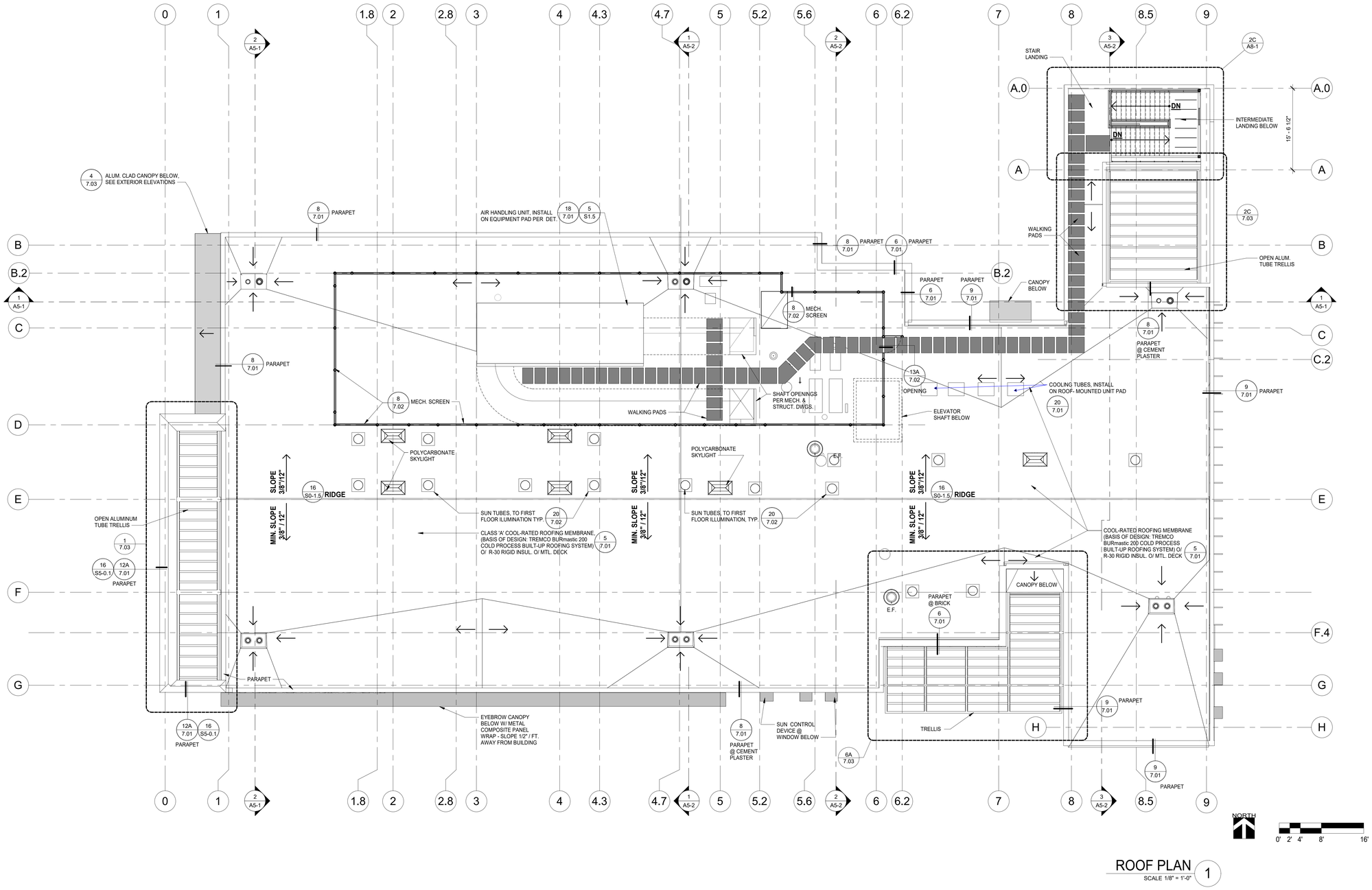

ROOF PLAN 1
SCALE 1/8" = 1'-0"

LEGEND

NOTE: ALL ROOFING SHALL BE CLASS "A"

O.D.	OVERFLOW DRAIN
R.D.	ROOF DRAIN
T.O.P.	TOP OF PARAPET
T.O.S.	TOP OF STEEL; UNDERSIDE OF DECK (U.N.O.)
R.D. / O.D.	ROOF AND OVERFLOW DRAIN 2/7.01
	CRICKET 4/7.01
	ROOF TOP DUCTS, SEE MECH. DWGS.
	DIRECTION OF ROOF SLOPE
	POLYCARBONATE LOW-E SKYLIGHT, BASIS OF DESIGN: VELUX FCM CURB-MOUNT FIXED 2'-0" X 4'-0" PER 16/7.02
E.F.	EXHAUST FAN PER MECHANICAL DWGS. 13/7.01
	SUNTUBES 5/7.02 10/7.02
	WALKING PAD

IDENTIFICATION STAMP
DIV. OF THE STATE ARCHITECT
APP. 03-119458 INC:
REVIEWED FOR
SS ☑ FLS ☑ ACS ☑
DATE:05/23/2019

DIVISION OF THE STATE ARCHITECT
355 South Grand Avenue, Suite 2100
Los Angeles, CA 90012
ph: (213) 897-3995 fx:(213) 897-3159

agency

tBP architecture planning interiors

LICENSED ARCHITECT
GARY PAIGE MOON
NO. C25409
REN. 7-31-11
STATE OF CALIFORNIA

tBP/Architecture
4611 Teller Avenue
Newport Beach, CA 92660
ph: 949.673.0300 fx: 949.732.3895

architect

consultant

COMPTON COLLEGE
INSTRUCTIONAL BUILDING No.2
COMPTON COMMUNITY COLLEGE DISTRICT
1111 E. ARTESIA BLVD. COMPTON, CA.

owner

tBP project number: 20998.00
file name:
drawn by: checked by:
date: 04/08/2019

rev:	date:	description:

THIS DRAWING AND THE DESIGNS, DEPICTIONS, IDEAS AND OTHER INFORMATION CONTAINED HEREIN CONSTITUTE UNPUBLISHED WORK OF tBP/ARCHITECTURE AND SHALL REMAIN PROPERTY OF tBP/ARCHITECTURE IN PERPETUITY. NO PART THEREOF SHALL BE REPRODUCED, DISCLOSED, DISTRIBUTED, SOLD, PUBLISHED OR OTHERWISE USED IN ANY WAY WITHOUT THE ADVANCED EXPRESS WRITTEN CONSENT OF tBP/ARCHITECTURE.

drawing title:
ROOF PLAN

drawing no.:
A3-1

drawing of

4/10/2019 11:30:06 AM

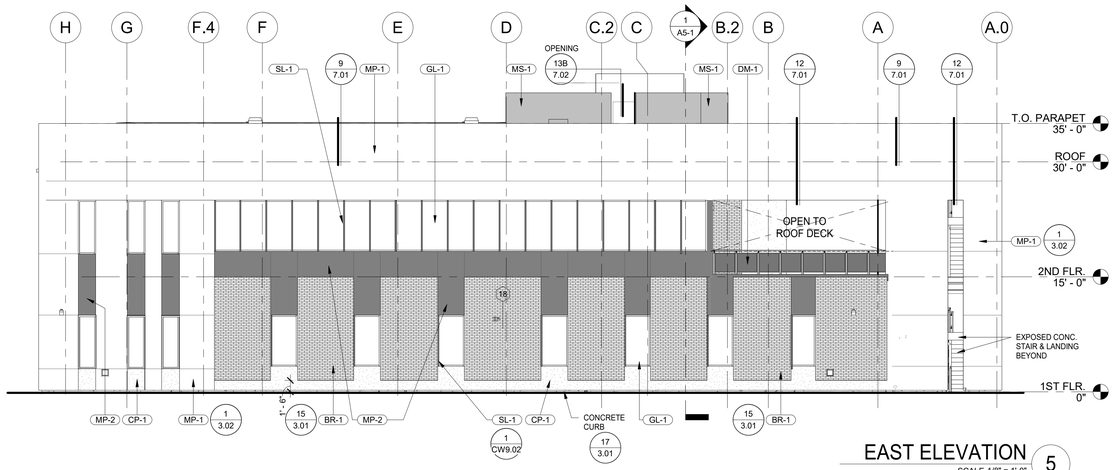

EAST ELEVATION 5

SCALE 1/8" = 1'-0"

XX-#	MATERIAL	COLOR / REMARKS
AC-1	ARCHITECTURAL CONCRETE	
AL-1	ALUMINUM FRAME	FACTORY FINISH
BR-1	BRICK VENEER MASONRY, 4"D. X 4"X16" W/ GRAFFITI-RESISTANT COATING	W/GRAFFITI-RESISTANT COATING
BS-1	BUILDING SIGNAGE, 18"H. INDIVIDUAL LETTERS, 1" THK, POST-MOUNT	BRUSHED ALUM.
C-1	CONCRETE CURB - EXPOSED	NATURAL
CP-1	PORTLAND CEMENT PLASTER	WHITE
CP-2	PORTLAND CEMENT PLASTER	DARK GREY
CP-3	PORTLAND CEMENT PLASTER	LIGHT GREY
FM-1	METAL FENCING & GATE W/ HIGH PERFORMANCE PAINT (P-5)	
GL-1	INSULATED GLAZING - STOREFRONT	
GL-2	INSULATED GLAZING - STOREFRONT SPANDREL	
GL-3	STRUCTURAL GLAZING	
GR-1	GUARDRAIL ASSEMBLY WITH S.S. RAILS & MESH PANELS	
LV-1	AIRFOIL LOUVER	
MP-1	COMPOSITE METAL PANEL SYSTEM	SILVER METALLIC (LIGHT GREY)
MP-2	COMPOSITE METAL PANEL SYSTEM	PEWTER (DARK GREY)
MP-4	COMPOSITE METAL PANEL SYSTEM	SCOTTISH OAK
MP-5	COMPOSITE METAL PANEL SYSTEM	BINE WHITE
MS-1	MECHANICAL SCREEN W/ GALV. STL FRAME/SUPPORTS	ALUM. CLADDING, MATCH BLDG.
P-5	PAINTED STEEL	HIGH PERFORMANCE PAINT
SM-1	SHEET METAL FLASHING AND TRIM, GALVANIZED	PAINT TO MATCH ADJ. MATERIAL
SS-1	SUNSHADE - FIXED VERTICAL SUN CONTROL DEVICE @ WINDOW	ALUMINUM
SS-2	SUNSHADE - FIXED HORIZONTAL SUN SCREEN @ WINDOW	ALUMINUM
SST-2	STAINLESS STEEL RAILCAPS @ GLASS RAILINGS	SATIN FINISH

ICC-ESR 1185

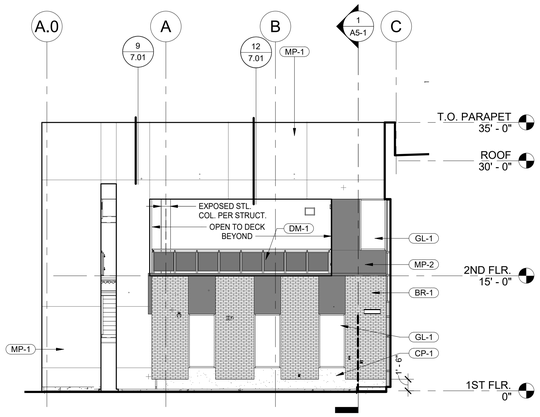

NORTH ENTRY - EAST 2

SCALE 1/8" = 1'-0"

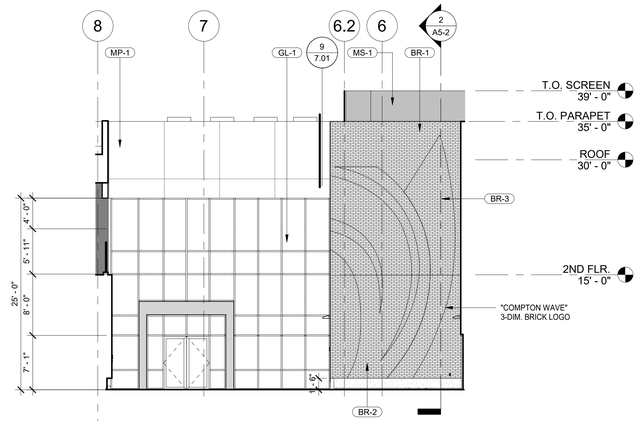

NORTH ENTRY - NORTH 3

SCALE 1/8" = 1'-0"

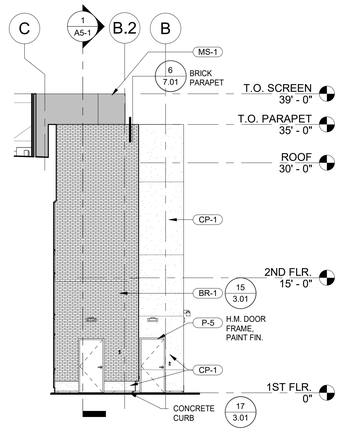

NORTH ENTRY - WEST 4

SCALE 1/8" = 1'-0"

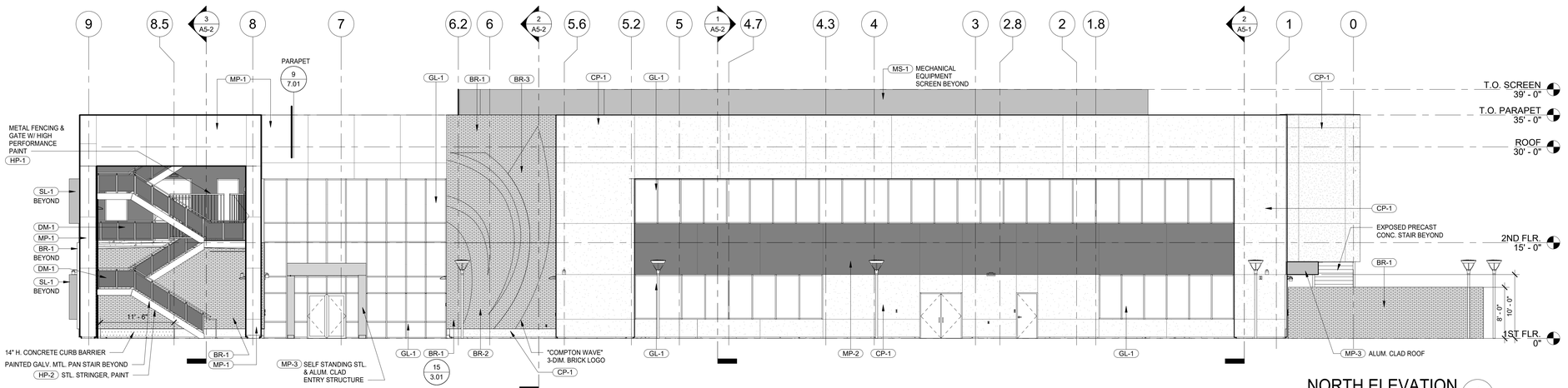

NORTH ELEVATION 1

SCALE 1/8" = 1'-0"

4/10/2019 11:30:14 AM

IDENTIFICATION STAMP
DIV. OF THE STATE ARCHITECT
APP. 03-119458 INC:
REVIEWED FOR
SS ☑ FLS ☑ ACS ☑
DATE: 05/23/2019

DIVISION OF THE STATE ARCHITECT
355 South Grand Avenue, Suite 2100
Los Angeles, CA 90012
ph: (213) 897-3995 fx:(213) 897-3159

agency

tBP
architecture
planning
interiors

LICENSED ARCHITECT
GREGORY PAIGE MCKAY
No. C25409
7-31-19
STATE OF CALIFORNIA

tBP/Architecture
4611 Teller Avenue
Newport Beach, CA 92660
ph: 949.673.0300 fx: 949.732.3895

architect

consultant

COMPTON COLLEGE
INSTRUCTIONAL BUILDING No.2

COMPTON COMMUNITY COLLEGE DISTRICT
1111 E. ARTESIA BLVD. COMPTON, CA.

owner

tBP project number: 20998.00
file name:
drawn by: checked by:
date: 04/08/2019

rev:	date:	description:

ALL DRAWINGS AND THE PHYSICAL EXPRESSIONS, IDEAS AND OTHER INFORMATION CONTAINED HEREIN CONSTITUTE UNPUBLISHED WORK OF tBP/ARCHITECTURE AND SHALL REMAIN PROPERTY OF tBP/ARCHITECTURE IN PERPETUITY. NO PART THEREOF SHALL BE REPRODUCED, DISCLOSED, DISTRIBUTED, SOLD, PUBLISHED OR OTHERWISE USED IN ANY WAY WITHOUT THE ADVANCED EXPRESS WRITTEN CONSENT OF tBP/ARCHITECTURE.

drawing title:
EXTERIOR ELEVATIONS

drawing no.:
A4-1
drawing of

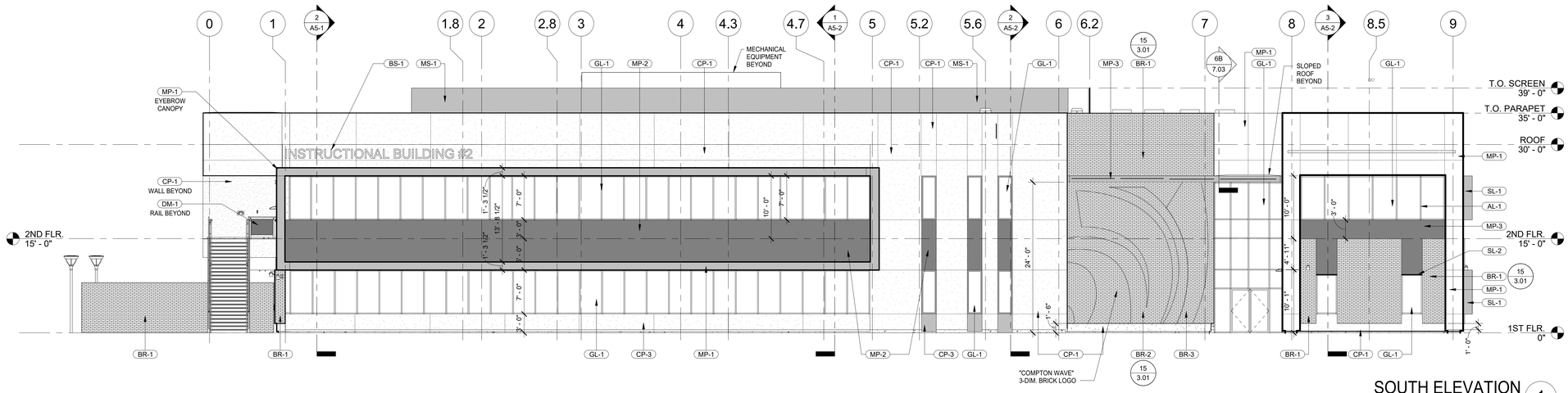

SOUTH ELEVATION 1

SCALE 1/8" = 1'-0"

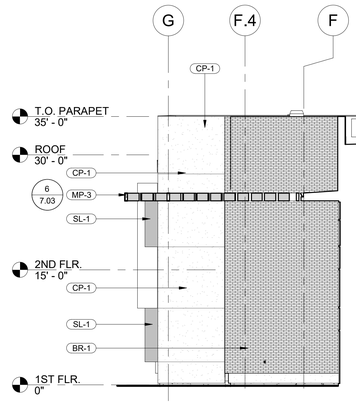

SOUTH ENTRY - WEST 3

SCALE 1/8" = 1'-0"

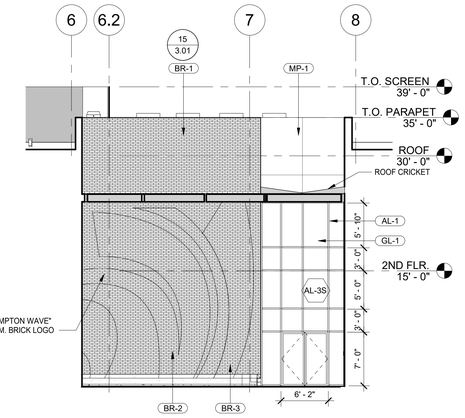

SOUTH ENTRY - SOUTH 4

SCALE 1/8" = 1'-0"

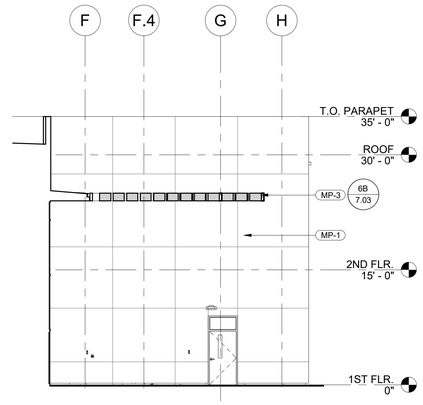

SOUTH ENTRY - EAST 5

SCALE 1/8" = 1'-0"

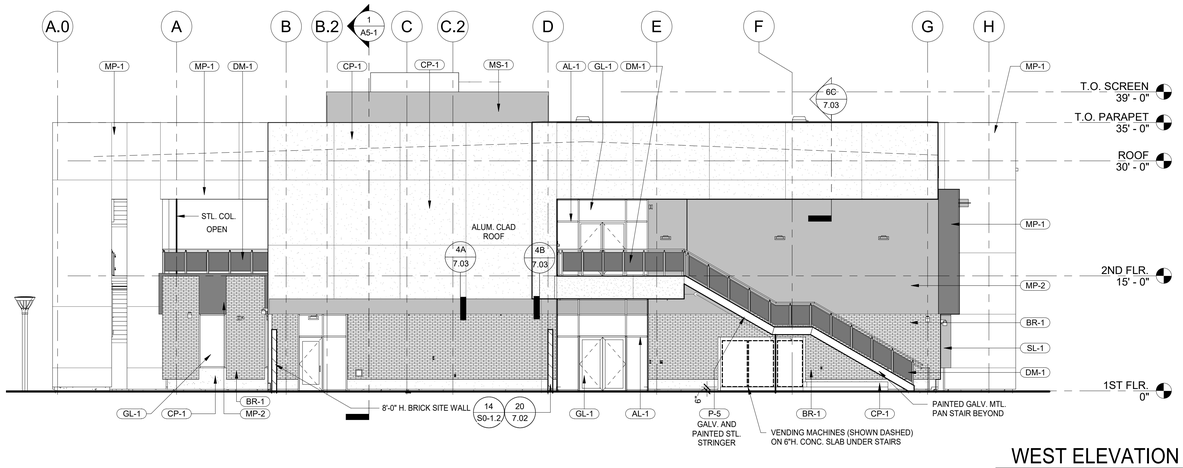

WEST ELEVATION 2

SCALE 1/8" = 1'-0"

XX-#	MATERIAL	COLOR / REMARKS
AC-1	ARCHITECTURAL CONCRETE	
AL-1	ALUMINUM FRAME	FACTORY FINISH
BR-1	BRICK VENEER MASONRY, 4"D. X 4"X16" W/ GRAFFITI-RESISTANT COATING	W/GRAFFITI-RESISTANT COATING
BS-1	BUILDING SIGNAGE, 18"H. INDIVIDUAL LETTERS, 1" THK, POST-MOUNT	BRUSHED ALUM.
C-1	CONCRETE CURB - EXPOSED	NATURAL
CP-1	PORTLAND CEMENT PLASTER	WHITE
CP-2	PORTLAND CEMENT PLASTER	DARK GREY
CP-3	PORTLAND CEMENT PLASTER	LIGHT GREY
FM-1	METAL FENCING & GATE W/ HIGH PERFORMANCE PAINT (P-5)	
GL-1	INSULATED GLAZING - STOREFRONT	
GL-2	INSULATED GLAZING - STOREFRONT SPANDREL	
GL-3	STRUCTURAL GLAZING	
GR-1	GUARDRAIL ASSEMBLY WITH S.S. RAILS & MESH PANELS	
LV-1	AIRFOIL LOUVER	
MP-1	COMPOSITE METAL PANEL SYSTEM	SILVER METALLIC (LIGHT GREY)
MP-2	COMPOSITE METAL PANEL SYSTEM	PEWTER (DARK GREY)
MP-4	COMPOSITE METAL PANEL SYSTEM	SCOTTISH OAK
MP-5	COMPOSITE METAL PANEL SYSTEM	BINE WHITE
MS-1	MECHANICAL SCREEN W/ GALV. STL FRAME/SUPPORTS	ALUM. CLADDING, MATCH BLDG.
P-5	PAINTED STEEL	HIGH PERFORMANCE PAINT
SM-1	SHEET METAL FLASHING AND TRIM, GALVANIZED	PAINT TO MATCH ADJ. MATERIAL
SS-1	SUNSHADE - FIXED VERTICAL SUN CONTROL DEVICE @ WINDOW	ALUMINUM
SS-2	SUNSHADE - FIXED HORIZONTAL SUN SCREEN @ WINDOW	ALUMINUM
SST-2	STAINLESS STEEL RAILCAPS @ GLASS RAILINGS	SATIN FINISH

ICC-ESR 1185

THESE DRAWINGS AND THE ORIGINAL ARCHITECTURAL IDEAS AND OTHER INFORMATION CONTAINED HEREIN CONSTITUTE UNPUBLISHED WORK OF tBP/ARCHITECTURE AND SHALL REMAIN PROPERTY OF tBP/ARCHITECTURE IN PERPETUITY. NO PART THEREOF SHALL BE REPRODUCED, DISCLOSED, DISTRIBUTED, SOLD, PUBLISHED OR OTHERWISE USED IN ANY WAY WITHOUT THE ADVANCED EXPRESS WRITTEN CONSENT OF tBP/ARCHITECTURE.

4/10/2019 11:30:21 AM

IDENTIFICATION STAMP
DIV. OF THE STATE ARCHITECT
APP. 03-119458 INC:
REVIEWED FOR
SS ☑ FLS ☑ ACS ☑
DATE:05/23/2019

DIVISION OF THE STATE ARCHITECT
355 South Grand Avenue, Suite 2100
Los Angeles, CA 90012
ph: (213) 897-3995 fx:(213) 897-3159

agency

tBP
architecture
planning
interiors

LICENSED ARCHITECT
GEOFF PAIGE MOSS
No. C25409
REN. 1-31-21
STATE OF CALIFORNIA

tBP/Architecture
4611 Teller Avenue
Newport Beach, CA 92660
ph: 949.673.0300 fx: 949.732.3895

architect

consultant

COMPTON COLLEGE
INSTRUCTIONAL BUILDING No.2
COMPTON COMMUNITY COLLEGE DISTRICT
1111 E. ARTESIA BLVD. COMPTON, CA.

owner

tBP project number: 20998.00
file name:
drawn by: checked by:
date: 04/08/2019

rev:	date:	description:

drawing title:
EXTERIOR ELEVATIONS

drawing no.:
A4-2
drawing of

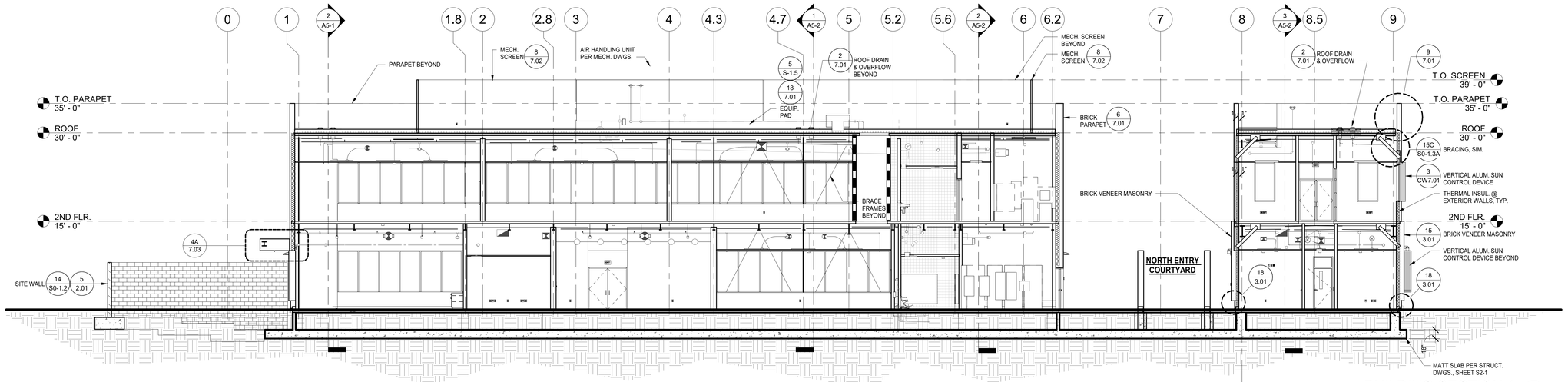

BUILDING SECTION 1 (1)
SCALE 1/8" = 1'-0"

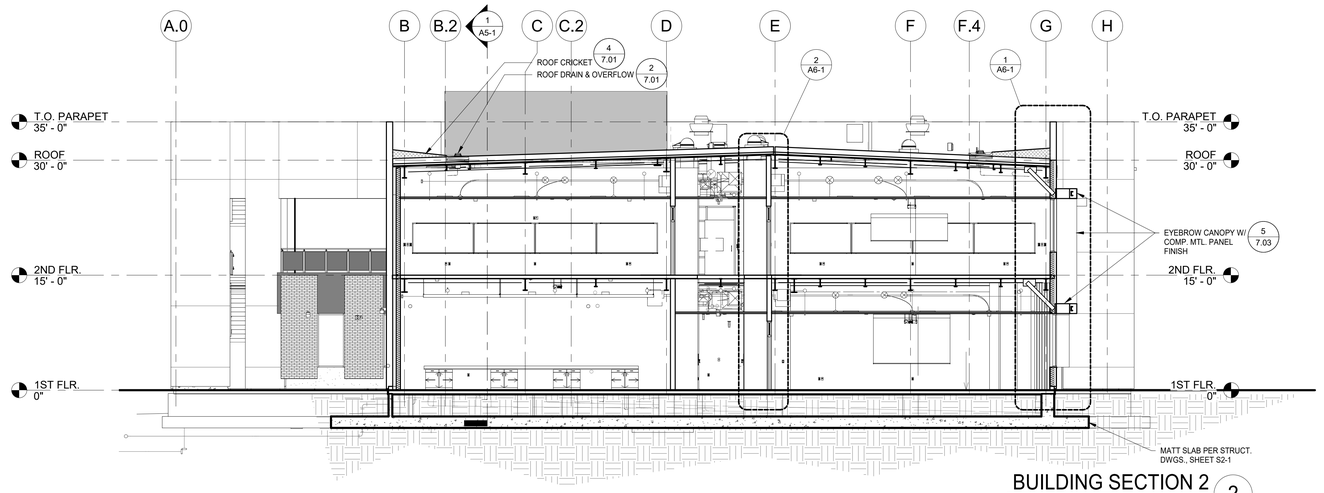

BUILDING SECTION 2 (2)
SCALE 1/8" = 1'-0"

IDENTIFICATION STAMP
DIV. OF THE STATE ARCHITECT
APP. 03-119458 INC:
REVIEWED FOR
SS ☑ FLS ☑ ACS ☑
DATE:05/23/2019

DIVISION OF THE STATE ARCHITECT
355 South Grand Avenue, Suite 2100
Los Angeles, CA 90012
ph: (213) 897-3995 fx:(213) 897-3159

agency

tBP
architecture planning interiors

LICENSED ARCHITECT
GARY PAIGE MOSEN
NO. C25409
REN. 7-31-11
STATE OF CALIFORNIA

tBP/Architecture
4611 Teller Avenue
Newport Beach, CA 92660
ph: 949.673.0300 fx: 949.732.3895

architect

consultant

COMPTON COLLEGE
INSTRUCTIONAL BUILDING No.2

COMPTON COMMUNITY COLLEGE DISTRICT
1111 E. ARTESIA BLVD. COMPTON, CA.

owner

tBP project number: 20998.00
file name:
drawn by: checked by:
date: 04/08/2019

rev:	date:	description:

THIS DRAWING AND THE DESIGNS, DEPICTIONS, IDEAS AND OTHER INFORMATION CONTAINED HEREIN CONSTITUTE UNPUBLISHED WORK OF tBP/ARCHITECTURE AND SHALL REMAIN PROPERTY OF tBP/ARCHITECTURE IN PERPETUITY. NO PART THEREOF SHALL BE REPRODUCED, DISCLOSED, DISTRIBUTED, SOLD, PUBLISHED OR OTHERWISE USED IN ANY WAY WITHOUT THE ADVANCED EXPRESS WRITTEN CONSENT OF tBP/ARCHITECTURE.

drawing title:
BUILDING SECTIONS

drawing no.:
A5-1
drawing of

4/10/2019 11:30:26 AM

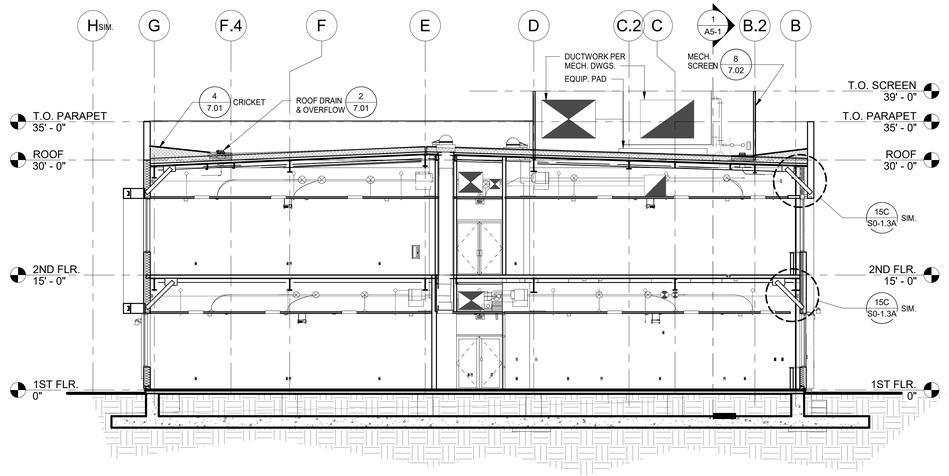

BUILDING SECTION 3 1
SCALE 1/8" = 1'-0"

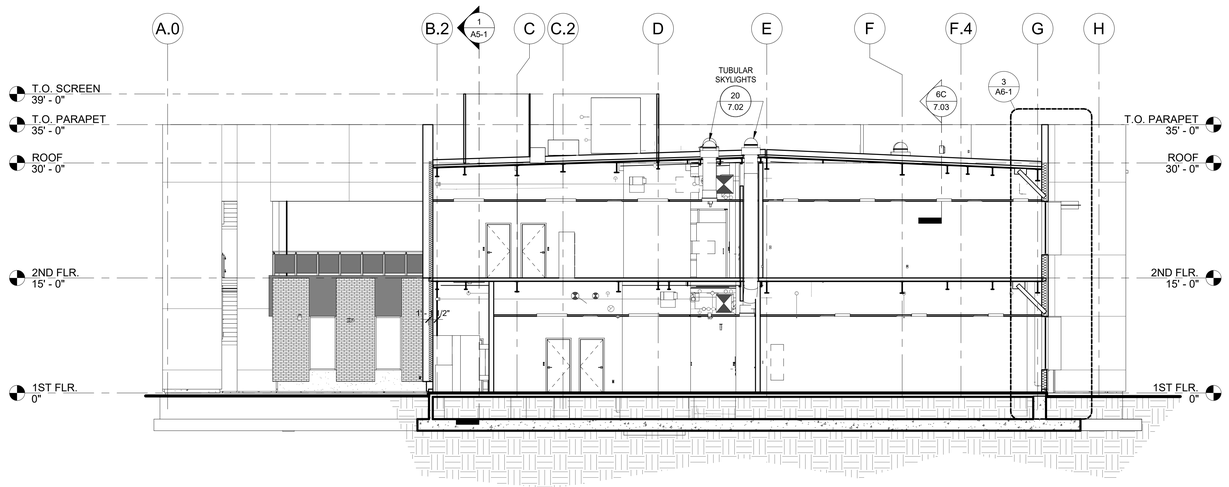

BUILDING SECTION 4 2
SCALE 1/8" = 1'-0"

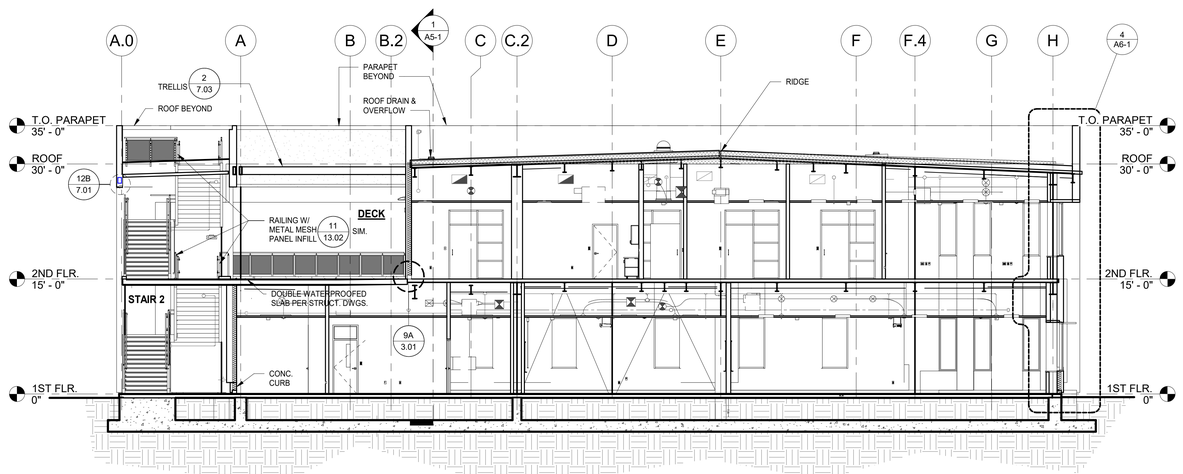

BUILDING SECTION 5 3
SCALE 1/8" = 1'-0"

IDENTIFICATION STAMP
DIV. OF THE STATE ARCHITECT
APP. 03-119458 INC:
REVIEWED FOR
SS ☑ FLS ☑ ACS ☑
DATE:05/23/2019

DIVISION OF THE STATE ARCHITECT
355 South Grand Avenue, Suite 2100
Los Angeles, CA 90012
ph: (213) 897-3995 fx:(213) 897-3159

agency

tBP
architecture
planning
interiors

LICENSED ARCHITECT
GARY PAIGE MOON
NO. C25409
REN. 7-31-11
STATE OF CALIFORNIA

tBP/Architecture
4611 Teller Avenue
Newport Beach, CA 92660
ph: 949.673.0300 fx: 949.732.3895

architect

consultant

COMPTON COLLEGE
INSTRUCTIONAL BUILDING No.2

COMPTON COMMUNITY COLLEGE DISTRICT
1111 E. ARTESIA BLVD. COMPTON, CA.

owner

tBP project number: 20998.00
file name:
drawn by: checked by:
date: 04/08/2019

rev:	date:	description:

THIS DRAWING AND THE DESIGNS, DEPICTIONS, IDEAS AND OTHER INFORMATION CONTAINED HEREIN CONSTITUTE UNPUBLISHED WORK OF tBP/ARCHITECTURE AND SHALL REMAIN PROPERTY OF tBP/ARCHITECTURE IN PERPETUITY. NO PART THEREOF SHALL BE REPRODUCED, DISCLOSED, DISTRIBUTED, SOLD, PUBLISHED OR OTHERWISE USED IN ANY WAY WITHOUT THE ADVANCED EXPRESS WRITTEN CONSENT OF tBP/ARCHITECTURE.

drawing title:
BUILDING SECTIONS

drawing no.:
A5-2
drawing of

4/10/2019 11:30:30 AM

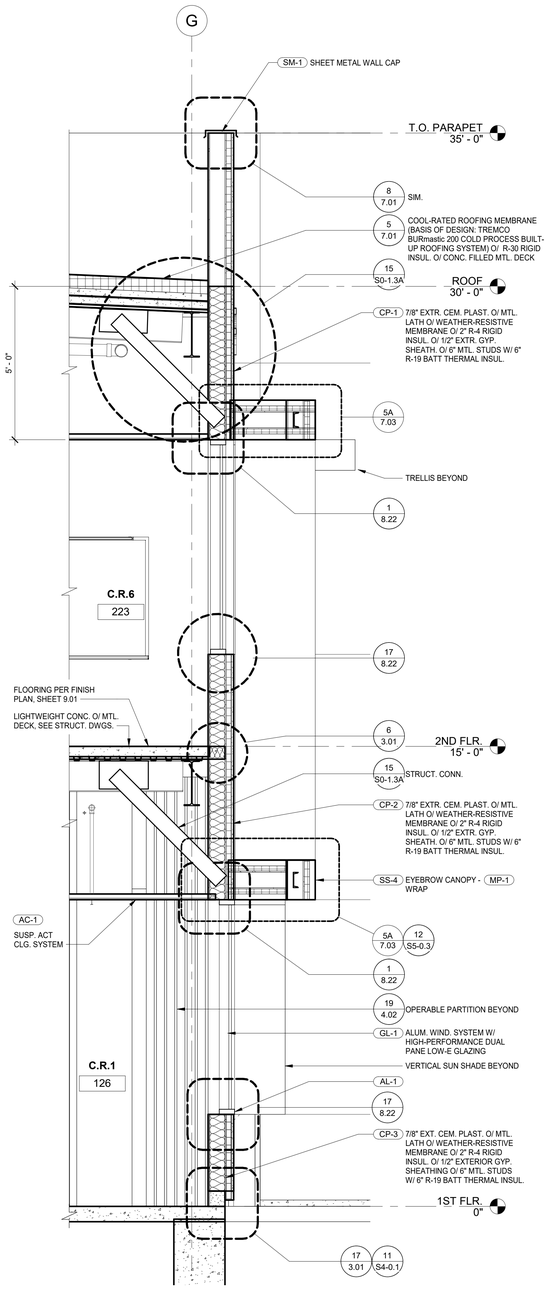

REF. DWG. 2/A5-1

WALL SECTION 1 (1)
SCALE 1/2" = 1'-0"

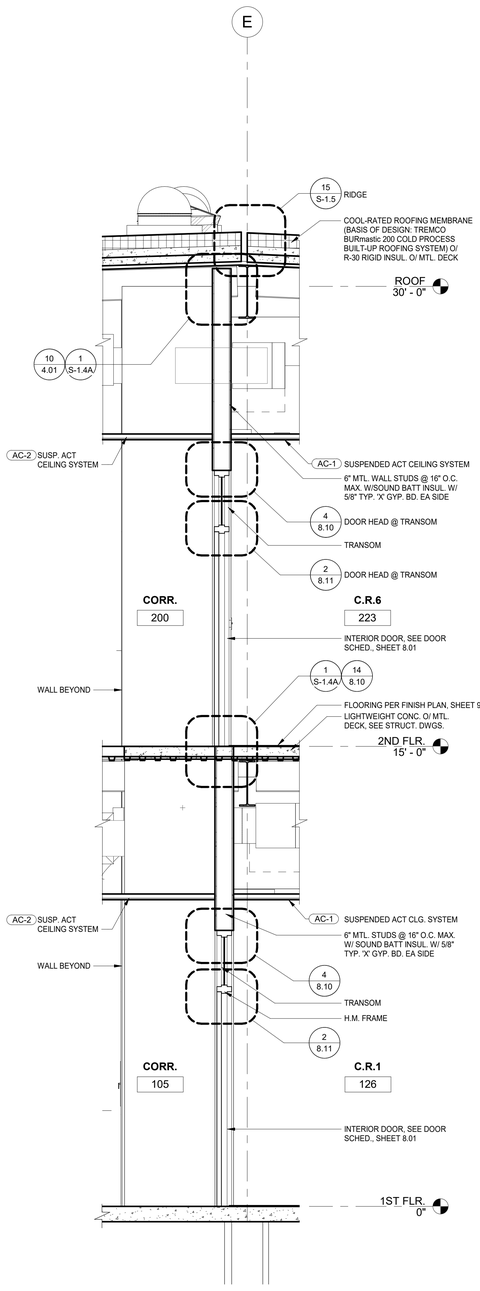

REF. DWG. 2/A5-1

WALL SECTION 2 (2)
SCALE 1/2" = 1'-0"

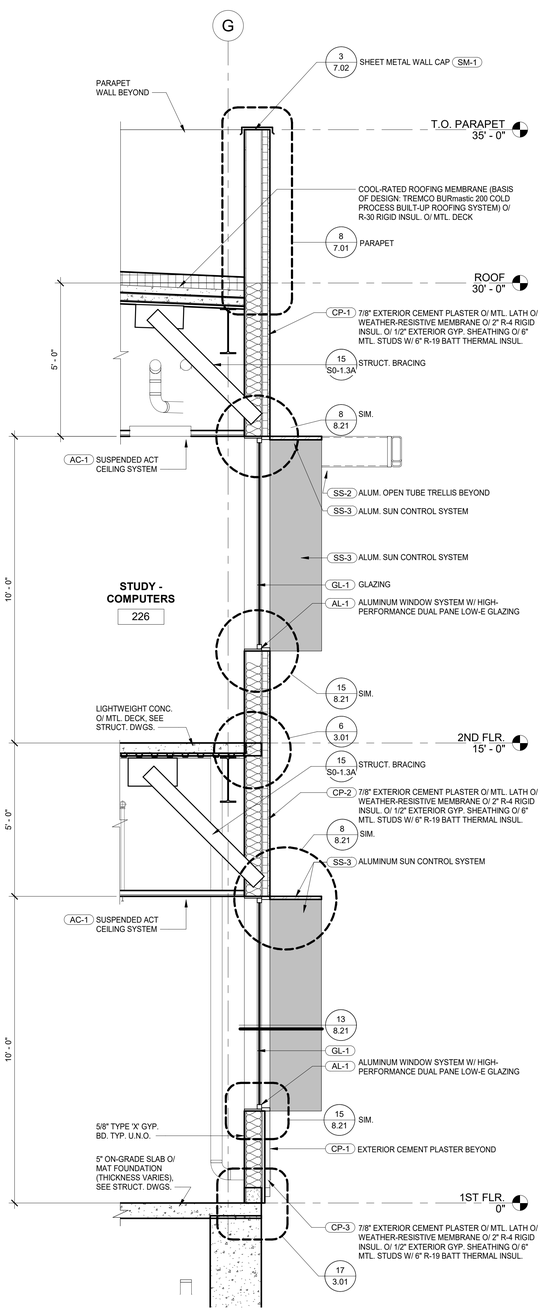

REF. DWG. 2/A5-2

WALL SECTION 3 (3)
SCALE 1/2" = 1'-0"

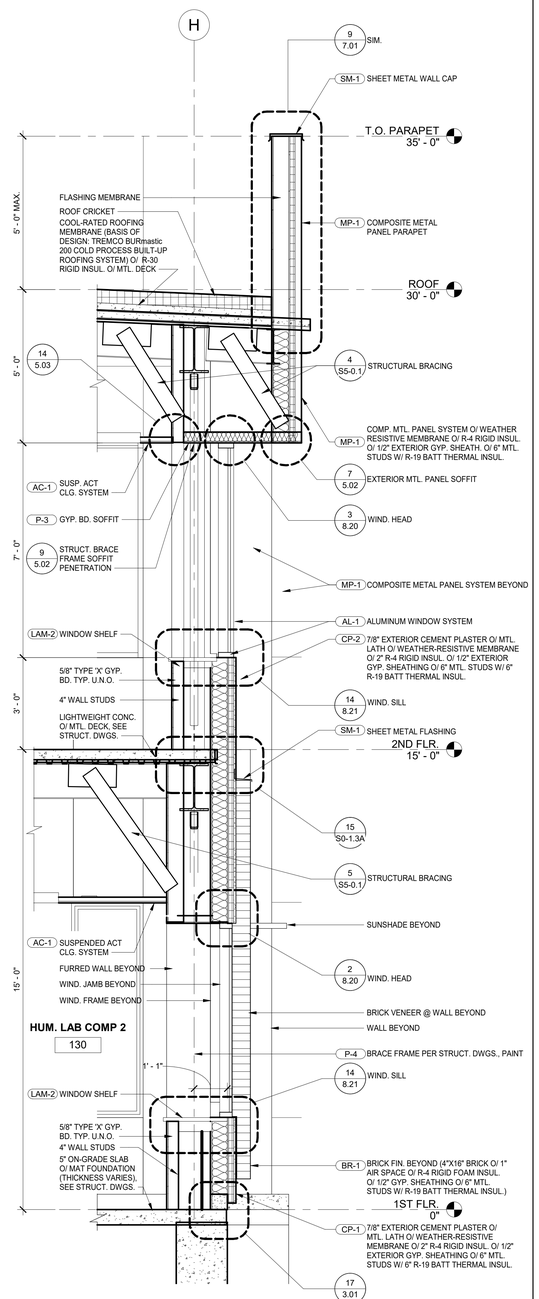

REF. DWG. 3/A5-2

WALL SECTION 4 (4)
SCALE 1/2" = 1'-0"

4/10/2019 11:30:33 AM

IDENTIFICATION STAMP
DIV. OF THE STATE ARCHITECT
APP. 03-119458 INC:
REVIEWED FOR
SS ☑ FLS ☑ ACS ☑
DATE: 05/23/2019

DIVISION OF THE STATE ARCHITECT
355 South Grand Avenue, Suite 2100
Los Angeles, CA 90012
ph: (213) 897-3995 fx:(213) 897-3159

agency

tBP architecture planning interiors
LICENSED ARCHITECT JEFFREY PAIGE MOSS NO. C25439 REN. 1-31-21 STATE OF CALIFORNIA
tBP/Architecture
4611 Teller Avenue
Newport Beach, CA 92660
ph: 949.673.0300 fx: 949.732.3895

architect

SIM.

consultant

COMPTON COLLEGE
INSTRUCTIONAL BUILDING No.2
COMPTON COMMUNITY COLLEGE DISTRICT
1111 E. ARTESIA BLVD. COMPTON, CA.

SIM.

owner

tBP project number: 20998.00
file name:
drawn by: checked by:
date: 04/08/2019

rev:	date:	description:

THIS DRAWING AND THE DESIGNS, DEPICTIONS, IDEAS AND OTHER INFORMATION CONTAINED HEREIN CONSTITUTE UNPUBLISHED WORK OF tBP/ARCHITECTURE AND SHALL REMAIN PROPERTY OF tBP/ARCHITECTURE IN PERPETUITY. NO PART THEREOF SHALL BE REPRODUCED, DISCLOSED, DISTRIBUTED, SOLD, PUBLISHED OR OTHERWISE USED IN ANY WAY WITHOUT THE ADVANCED EXPRESS WRITTEN PERMISSION OF tBP/ARCHITECTURE.

drawing title:
WALL SECTIONS

drawing no.:
A6-1
drawing of

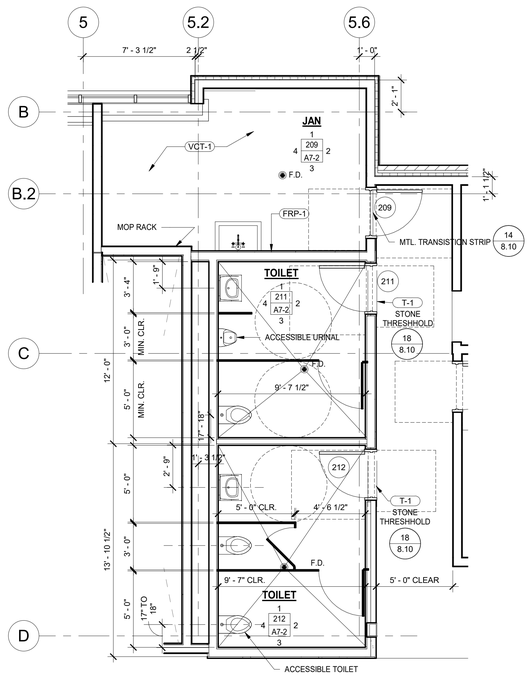

NOTES:
1. SEE SHEET 9.05 FOR TYPICAL TILE WALL AND FLOOR PATTERNS
2. SEE ELEVATIONS (SHEET A7-2) AND PLAN 1/A7-1 FOR TYP. TOILET ACCESSORY KEYNOTES

NORTH 0' 1' 2' 4' 8'

ENLARGED PLAN RMS. 209, 211, 212 - TOILET RMS. 4

SCALE 1/4" = 1'-0"

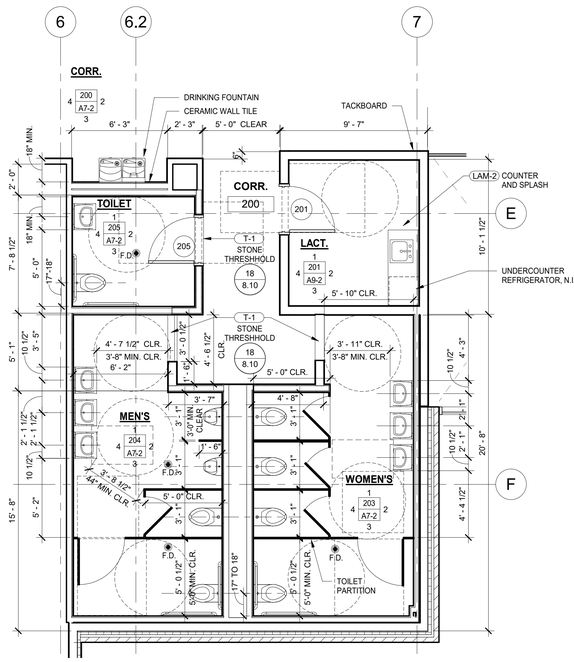

NOTES:
1. SEE SHEET 9.05 FOR TYPICALTILE WALL AND FLOOR PATTERNS
2. SEE ELEVATIONS (SHEET A7-2) AND PLAN 2/A7-1 FOR TYP. TOILET ACCESSORY KEYNOTES

NORTH 0' 1' 2' 4' 8'

ENLARGED PLAN RMS. 201, 203 THRU 205 - TOILET RMS. 6

SCALE 1/4" = 1'-0"

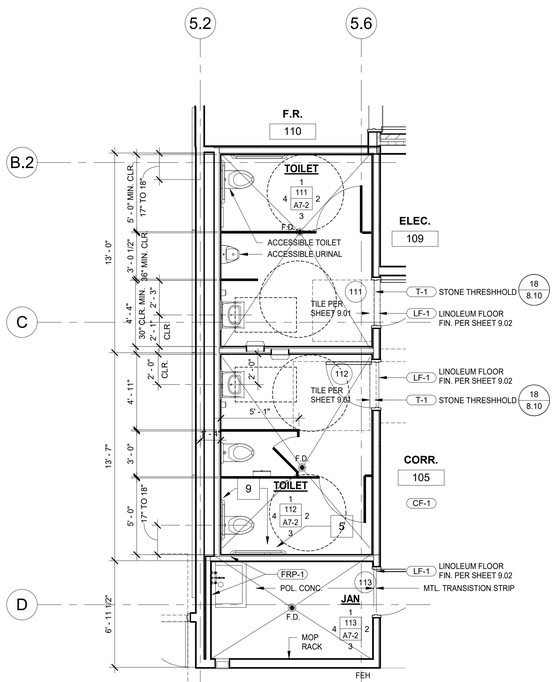

NOTES:
1. SEE SHEET 9.05 FOR TYPICALTILE WALL AND FLOOR PATTERNS
2. SEE ELEVATIONS A7-2 FOR ADDITIONAL ACCESSORY KEYNOTES

NORTH 0' 1' 2' 4' 8'

ENLARGED PLAN RMS. 111, 113 - TOILET ROOM 1

SCALE 1/4" = 1'-0"

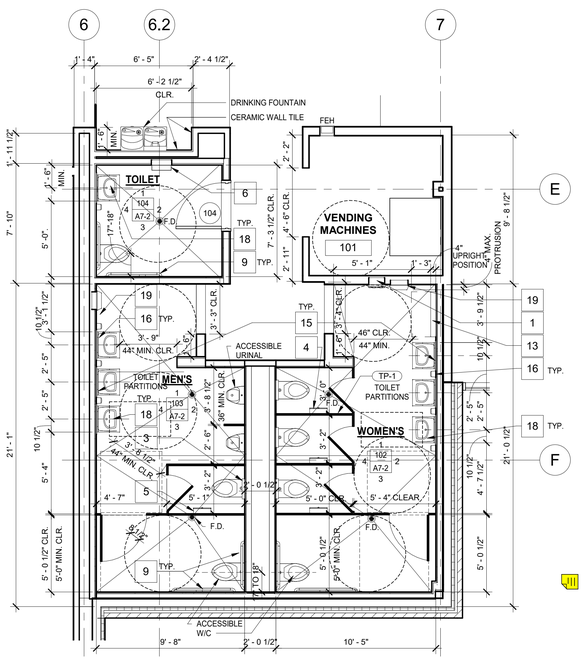

NOTES:
1. SEE SHEET 9.05 FOR TYPICALTILE WALL AND FLOOR PATTERNS
2. SEE ELEVATIONS A7-2 FOR ADDITIONAL ACCESSORY KEYNOTES

NORTH 0' 1' 2' 4' 8'

ENLARGED PLAN RMS. 101 THRU 104 - TOILET RMS. 2

SCALE 1/4" = 1'-0"

TOILET ACCESSORY KEYNOTES

1	SANITARY NAPKIN / TAMPON VENDOR, RECESSED	C. I. C. F	BOBRICK B-4706 25
2	SANITARY NAPKIN DISPOSAL, SURFACE MOUNTED ST. STL.	C.F.C.I.	BOBRICK B-2706
3	SEAT COVER DISPENSER, SURFACE MOUNTED	C.I.C.F.	BOBRICK XXX
4	RECESSED COMBO TOILET SEAT COVER DISP. & TOILET TISSUE DISPENSER	C.F.C.I.	BOBRICK B-3474
5	2 ROLL TOILET TISSUE DISPENSER	O.F.C.I.	DUBL-SERV 80200
5A	3 ROLL TOILET TISSUE DISPENSER	O.F.C.I.	REVOLUTION 80300
6	RECESSED TRASH & NICH FOR PAPER TOWEL DISPENSER	C.F.C.I.	BOBRICK B-3944
9	GRAB BARS, 1-1/2" DIA. BY 18 GA. STAINLESS STL. TUBING, 48"L SIDE WALL, 42" LONG BACK WALL, 42"L IN AMBULATORY STALL	C.F.C.I.	BOBRICK B-6806
10	GRAB BAR, L-SHAPED	NOT USED	NOT USED
11	COAT HOOK	C.F.C.I.	BOBRICK XX
12	RECESSED WASTE RECEPTACLE	C.F.C.I.	BOBRICK B-35643 / APRVD.EQ.
13	RECESSED BABY CHANGING STATION - HORIZ. WALL-MOUNT ST. STL.	C.F.C.I.	BOBRICK KOALA CARE KB110-SSWM
14A	PAPER TOWEL DISPENSER, HANDS FREE	O.F.C.I.	OptiServ 76700
14B	PAPER TOWEL DISPENSER, HANDS FREE	O.F.C.I.	OptiServ 86800
15	MIRROR, STAINLESS STEEL CHANNEL FRAME, 24" X 36"	C.F.C.I.	BOBRICK B-1658 2436 OR EQ.
16	LOTION SOAP DISPENSER, VERTICAL TANK, SURF. MOUNTED	O.F.C.I.	IMPACT 9325
17	UTILITY SHELF W/ MOP & BROOM HOLDER, SURFACE MOUNT	C.F.C.I.	BOBRICK B-239
18	UNDER LAVATORY GUARDS, MOLDED VINYL COVERING FOR SUPPLY, DRAIN PIPING W/FLIP TOPS @ VALVE TO ALLOW SERVICE ACCESS W/O REMOVING COVERS	C.F.C.I.	
19	ELECTRIC HAND DRYER, SEMI-RECESSED	C.F.C.I.	BOBRICK B-750 OR APRVD. EQ.
		O.F.C.I.	BOBRICK B-369

TOILET ACCESSORY MOUNTING HEIGHTS

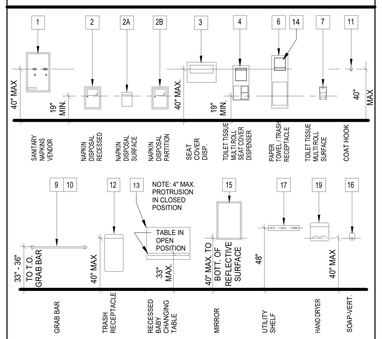

NOTES:

1. MOUNTING HEIGHTS SHOWN ARE TYPICAL, UNLESS OTHERWISE NOTED.
2. ALL ACCESSORIES SHALL BE ACCESSIBLE WITH A MAXIMUM REACH HEIGHT OF 40" A.F.F.
3. SLOPE FLOORS 1/8" PER FOOT MIN. AND 1/4" PER FOOT MAXIMUM, U.N.O.
4. SEE ENLARGED TOILET PLAN/INTERIOR ELEVS. DWGS. FOR TOILET ACCESSORY LOCATIONS
5. OWNER FURNISHED ACCESSORIES SHALL BE CONTRACTOR INSTALLED (O.F.C.I.)
6. PROVIDE BACKING FOR GRAB BARS AND SHELVES

TOILET FIXTURE MOUNTING HEIGHTS

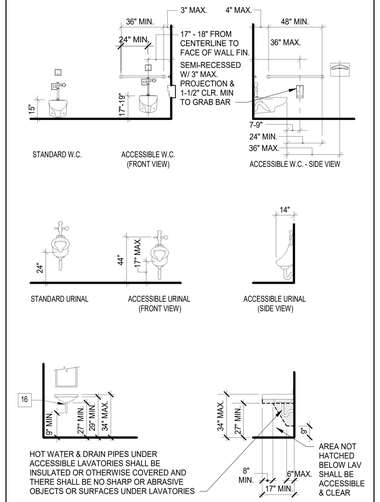

HOT WATER & DRAIN PIPES UNDER ACCESSIBLE LAVATORIES SHALL BE INSULATED OR OTHERWISE COVERED AND THERE SHALL BE NO SHARP OR ABRASIVE OBJECTS OR SURFACES UNDER LAVATORIES

AREA NOT HATCHED BELOW LAV SHALL BE ACCESSIBLE & CLEAR

CLEARANCES OF FIXTURES & ACCESSORIES TO FINISHED SURFACES

	ADULT
TOILET CENTERLINE FROM WALL	17" - 18" FROM CENTERLINE TO WALL
TOILET SEAT HEIGHT (AT SEAT LID)	17" - 19" ABOVE FINISH FLOOR TO TOP OF SEAT
GRAB BAR HEIGHT (SIDE)	33" - 36" FROM FIN. FLR. TO T.O. BAR
TOILET PAPER IN FRONT OF TOILET	7-9" FROM TOILET TO CENTERLINE OF DISPENSER
NAPKIN DISPOSAL IN FRONT OF TOILET	BETWEEN TOILET PAPER DISP. AND REAR WALL
DISPENSER OR MIRROR HEIGHT	40" MAX.
LAVATORY/SINK TOP HEIGHT	34" MAX.
LAVATORY/SINK KNEE CLEARANCE	25" MAX.
URINAL LIP HEIGHT	17" MAX.
URINAL FLUSH HANDLE HEIGHT	44" MAX.
DRINKING FOUNTAIN BUBBLER HEIGHT	36" MAX.
DRINKING FOUNTAIN KNEE CLEARANCE	27" MIN.
RAMP/STAIR HANDRAIL HEIGHT	34"-38"

IDENTIFICATION STAMP
DIV. OF THE STATE ARCHITECT
APP. 03-119458 INC:
REVIEWED FOR
SS ☑ FLS ☑ ACS ☑
DATE:05/23/2019

DIVISION OF THE STATE ARCHITECT
355 South Grand Avenue, Suite 2100
Los Angeles, CA 90012
ph: (213) 897-3995 fx:(213) 897-3159

agency

tBP architecture planning interiors

LICENSED ARCHITECT JOSEPH PAIGE MOSKI NO. C25409 STATE OF CALIFORNIA

tBP/Architecture
4611 Teller Avenue
Newport Beach, CA 92660
ph: 949.673.0300 fx. 949.732.3895

architect

consultant

COMPTON COLLEGE
INSTRUCTIONAL BUILDING No.2
COMPTON COMMUNITY COLLEGE DISTRICT
1111 E. ARTESIA BLVD. COMPTON, CA.

owner

tBP project number: 20998.00
file name:
drawn by: checked by:
date: 04/08/2019

rev:	date:	description:

THIS DRAWING AND THE DESIGNS, DIRECTIONS, IDEAS AND OTHER INFORMATION CONTAINED HEREIN CONSTITUTE UNPUBLISHED WORK OF tBP/ARCHITECTURE AND SHALL REMAIN PROPERTY OF tBP/ARCHITECTURE IN PERPETUITY. NO PART THEREOF SHALL BE REPRODUCED, DISCLOSED, DISTRIBUTED, SOLD, PUBLISHED OR OTHERWISE USED IN ANY WAY WITHOUT THE ADVANCED EXPRESS WRITTEN CONSENT OF tBP/ARCHITECTURE.

drawing title:
ENLARGED PLANS - TOILET RMS. / JAN.

drawing no.:
A7-1
drawing of

4/10/2019 11:30:37 AM

DRINKING FOUNTAIN 100/ 200 SIM

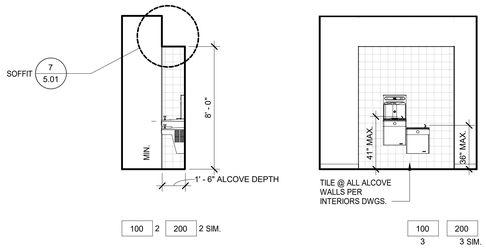

NOTE: SEE PLUMBING FIXTURE AND TOILET ACCESSORY MOUNTING HEIGHTS SCHEDULES

ENLARGED WOMEN'S RESTROOM 102/ 203 SIM

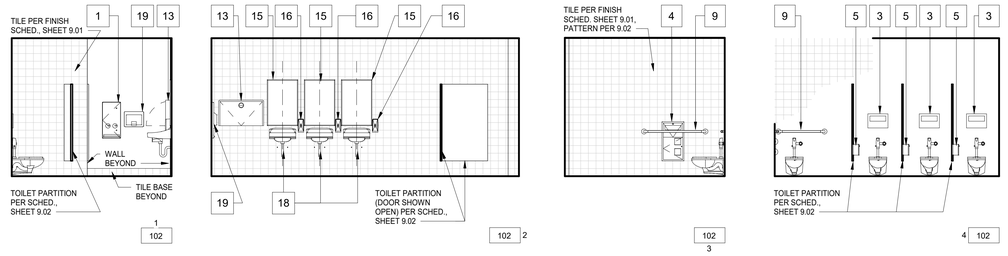

NOTE: SEE PLUMBING FIXTURE AND TOILET ACCESSORY MOUNTING HEIGHTS SCHEDULES

TOILET ACCESSORY KEYNOTES

1	SANITARY NAPKIN / TAMPON VENDOR, RECESSED	C. I. C. F	BOBRICK B-4706 25
2	SANITARY NAPKIN DISPOSAL, SURFACE MOUNTED ST. STL.	C.F.C.I.	BOBRICK B-2706
3	SEAT COVER DISPENSER, SURFACE MOUNTED	C.I.C.F.	BOBRICK XXX
4	RECESSED COMBO TOILET SEAT COVER DISP. & TOILET TISSUE DISPENSER	C.F.C.I.	BOBRICK B-3474
5	2 ROLL TOILET TISSUE DISPENSER	O.F.C.I.	DUBL-SERV 80200
5A	3 ROLL TOILET TISSUE DISPENSER	O.F.C.I.	REVOLUTION 80300
6	RECESSED TRASH & NICH FOR PAPER TOWEL DISPENSER	C.F.C.I.	BOBRICK B-3944
9	GRAB BARS, 1-1/2" DIA. BY 18 GA. STAINLESS STL. TUBING, 48"L. SIDE WALL, 42" LONG BACK WALL, 42"L IN AMBULATORY STALL	C.F.C.I.	BOBRICK B-6806
10	GRAB BAR, L-SHAPED	NOT USED	NOT USED
11	COAT HOOK	C.F.C.I.	BOBRICK XX
12	RECESSED WASTE RECEPTACLE	C.F.C.I.	BOBRICK B-35643 / APRVD.EQ.
13	RECESSED BABY CHANGING STATION - HORIZ. WALL-MOUNT ST. STL.	C.F.C.I.	BOBRICK KOALA CARE KB110-SSWM
14A	PAPER TOWEL DISPENSER, HANDS FREE	O.F.C.I.	OptiServ 76700
14B	PAPER TOWEL DISPENSER, HANDS FREE	O.F.C.I.	OptiServ 86800
15	MIRROR, STAINLESS STEEL CHANNEL FRAME, 24" X 36"	C.F.C.I.	BOBRICK B-1658 2436 OR EQ.
16	LOTION SOAP DISPENSER, VERTICAL TANK, SURF. MOUNTED	O.F.C.I.	IMPACT 9325
17	UTILITY SHELF W/ MOP & BROOM HOLDER, SURFACE MOUNT	C.F.C.I.	BOBRICK B-239
18	UNDERLAVATORY GUARDS, MOLDED VINYL COVERING FOR SUPPLY/ DRAIN PIPING W/FLIP TOPS @ VALVE TO ALLOW SERVICE ACCESS W/O REMOVING COVERS	C.F.C.I.	
19	ELECTRIC HAND DRYER, SEMI-RECESSED	C.F.C.I.	BOBRICK B-750 OR APRVD. EQ.
		O.F.C.I.	BOBRICK B-369

TOILET ACCESSORY MOUNTING HEIGHTS

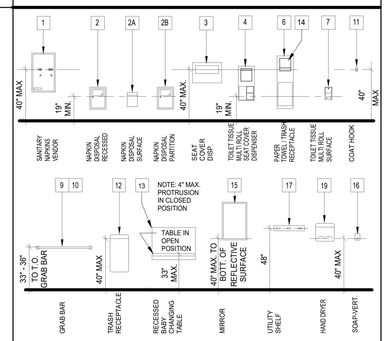

NOTES:

1. MOUNTING HEIGHTS SHOWN ARE TYPICAL, UNLESS OTHERWISE NOTED.
2. ALL ACCESSORIES SHALL BE ACCESSIBLE WITH A MAXIMUM REACH HEIGHT OF 40" A.F.F.
3. SLOPE FLOORS 1/8" PER FOOT MIN. AND 1/4" PER FOOT MAXIMUM, U.N.O.
4. SEE ENLARGED TOILET PLAN/INTERIOR ELEVS. DWGS. FOR TOILET ACCESSORY LOCATIONS
5. OWNER FURNISHED ACCESSORIES SHALL BE CONTRACTOR INSTALLED (O.F.C.I.)
6. PROVIDE BACKING FOR GRAB BARS AND SHELVES

ENLARGED MEN'S RESTROOM 103 / 204 SIM

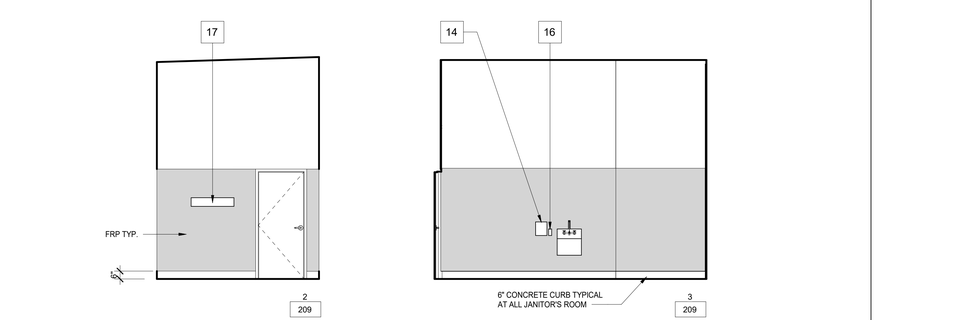

NOTE: SEE PLUMBING FIXTURE AND TOILET ACCESSORY MOUNTING HEIGHTS SCHEDULES

ENLARGED ALL GENDER RESTROOM 104/ 205 SIM

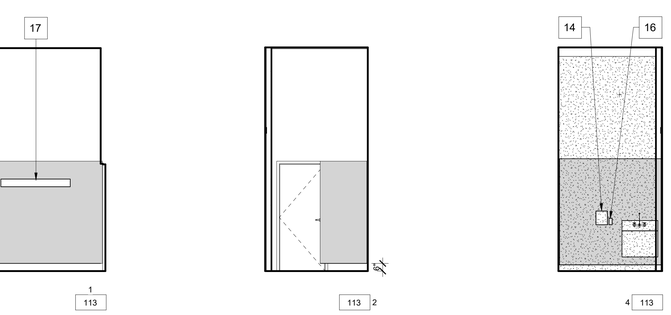

NOTE: SEE PLUMBING FIXTURE AND TOILET ACCESSORY MOUNTING HEIGHTS SCHEDULES

TOILET FIXTURE MOUNTING HEIGHTS

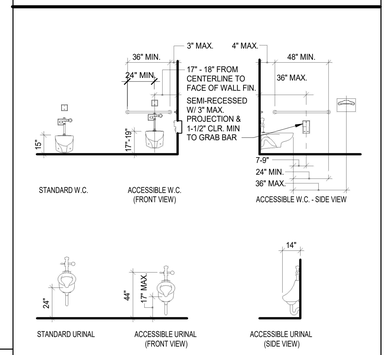

CLEARANCES OF FIXTURES & ACCESSORIES TO FINISHED SURFACES

	ADULT
TOILET CENTERLINE FROM WALL	17" - 18" FROM CENTERLINE TO WALL
TOILET SEAT HEIGHT (AT SEAT LID)	17" - 19" ABOVE FINISH FLOOR TO TOP OF SEAT
GRAB BAR HEIGHT (SIDE)	33" - 36" FROM FIN. FLR. TO T.O. BAR
TOILET PAPER IN FRONT OF TOILET	7-9" FROM TOILET TO CENTERLINE OF DISPENSER
NAPKIN DISPOSAL IN FRONT OF TOILET DISPENSER OR MIRROR HEIGHT	BETWEEN TOILET PAPER DISP. AND REAR WALL 40" MAX.
LAVATORY/SINK TOP HEIGHT	34" MAX.
LAVATORY/SINK KNEE CLEARANCE	29" MAX.
URINAL LIP HEIGHT	17" MAX.
URINAL FLUSH HANDLE HEIGHT	44" MAX.
DRINKING FOUNTAIN BUBBLER HEIGHT	36" MAX.
DRINKING FOUNTAIN KNEE CLEARANCE	27" MIN.
RAMP/STAIR HANDRAIL HEIGHT	34"-38"

ENLARGED STAFF MEN RESTROOM 111/ 211 O.H.

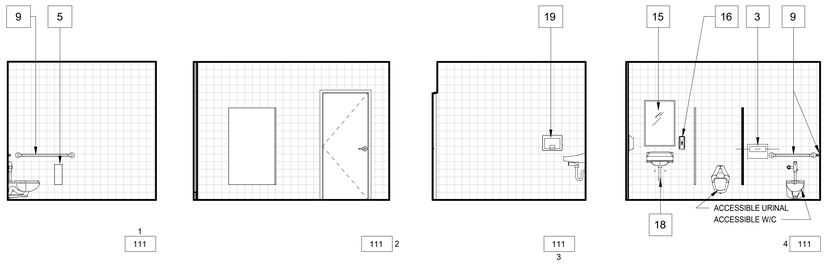

NOTE: SEE PLUMBING FIXTURE AND TOILET ACCESSORY MOUNTING HEIGHTS SCHEDULES

ENLARGED STAFF WOMEN'S RESTROOM 112/ 212 SIM

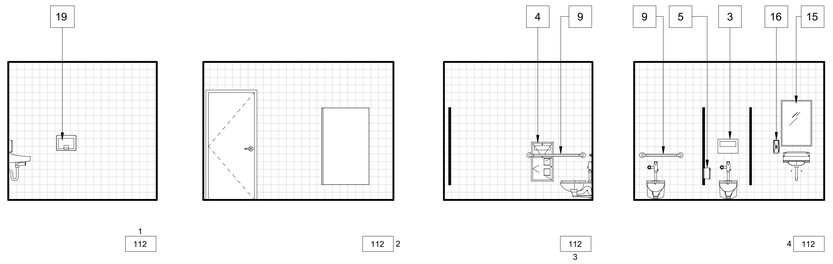

NOTE: SEE PLUMBING FIXTURE AND TOILET ACCESSORY MOUNTING HEIGHTS SCHEDULES

JANITOR'S ROOM 209

NOTE: SEE PLUMBING FIXTURE AND TOILET ACCESSORY MOUNTING HEIGHTS SCHEDULES

JANITOR'S ROOM 113

NOTE: SEE PLUMBING FIXTURE AND TOILET ACCESSORY MOUNTING HEIGHTS SCHEDULES

4/10/2019 11:30:46 AM

IDENTIFICATION STAMP
DIV. OF THE STATE ARCHITECT
APP. 03-119458 INC:
REVIEWED FOR
SS ☑ FLS ☑ ACS ☑
DATE:05/23/2019

DIVISION OF THE STATE ARCHITECT
355 South Grand Avenue, Suite 2100
Los Angeles, CA 90012
ph: (213) 897-3995 fx:(213) 897-3159

agency

tBP architecture planning interiors

tBP/Architecture
4611 Teller Avenue
Newport Beach, CA 92660
ph: 949.673.0300 fx. 949.732.3895

LICENSED ARCHITECT — JEREMY PAIGE MOSS — No. C35409 — 7-31-19 — STATE OF CALIFORNIA

architect

consultant

COMPTON COLLEGE
INSTRUCTIONAL BUILDING No.2
COMPTON COMMUNITY COLLEGE DISTRICT
1111 E. ARTESIA BLVD. COMPTON, CA.

owner

tBP project number: 20998.00
file name:
drawn by: checked by:
date: 04/08/2019

rev:	date:	description:

THIS DRAWING AND THE DESIGNS, IDEAS AND OTHER INFORMATION CONTAINED HEREIN CONSTITUTE UNPUBLISHED WORK OF tBP/ARCHITECTURE AND SHALL REMAIN PROPERTY OF tBP/ARCHITECTURE IN PERPETUITY. NO PART THEREOF SHALL BE REPRODUCED, DISCLOSED, DISTRIBUTED, SOLD, PUBLISHED OR OTHERWISE USED IN ANY WAY WITHOUT THE ADVANCED EXPRESS WRITTEN CONSENT OF tBP/ARCHITECTURE.

drawing title:
TOILET RMS. FIRST FLOOR - INTERIOR ELEVATIONS

drawing no.:
A7-2
drawing of

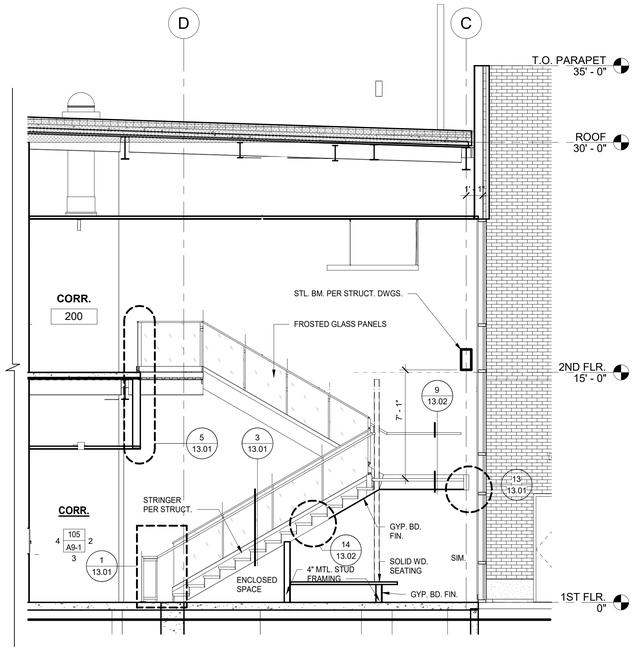

STAIR 1 SECTION 1C
SCALE 1/4" = 1'-0"

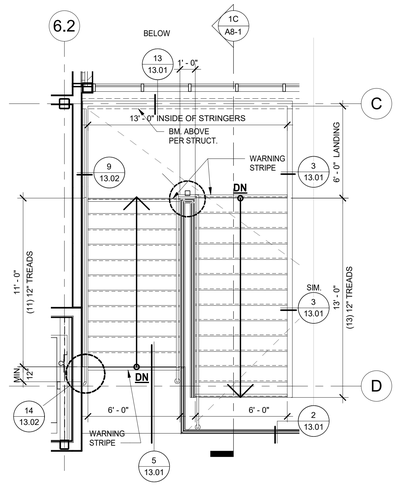

STAIR 1 PLAN - 2ND FLR 1B
SCALE 1/4" = 1'-0"

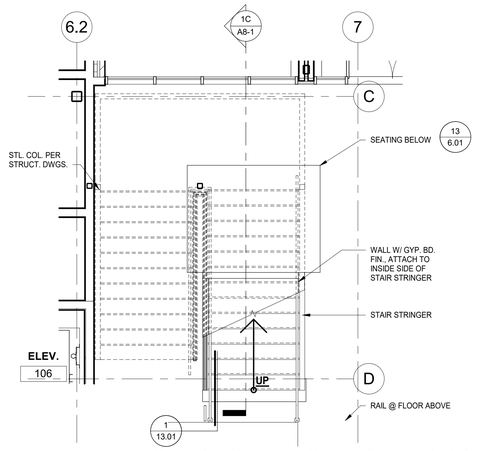

STAIR 1 PLAN - 1ST FLR INTERIOR 1A
SCALE 1/4" = 1'-0"

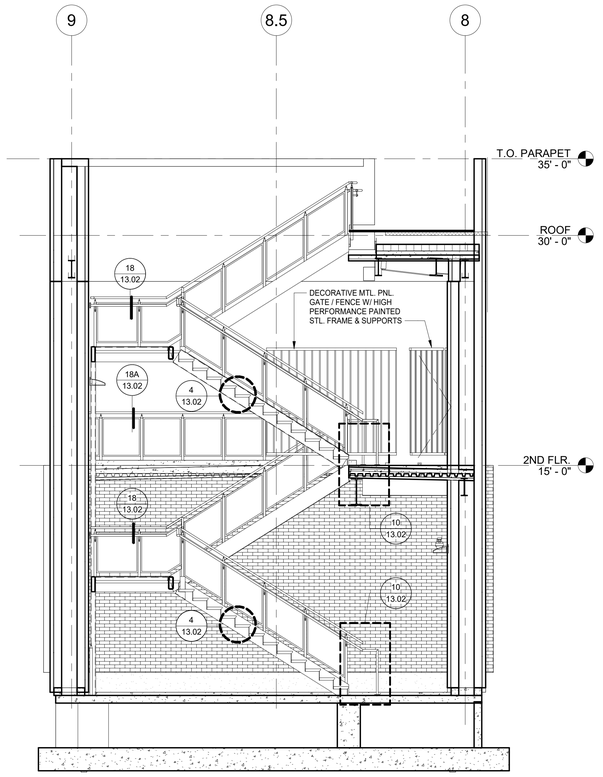

STAIR 2 SECTION1 2E
SCALE 1/4" = 1'-0"

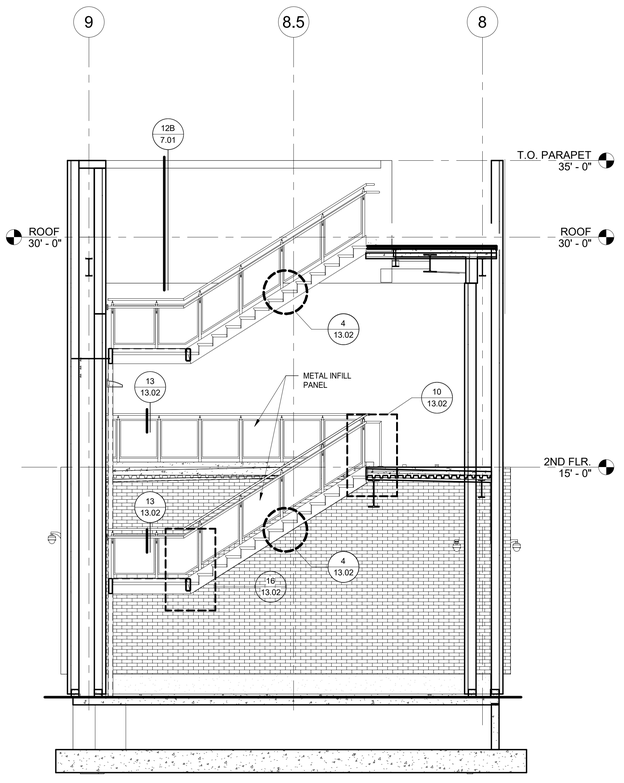

STAIR 2 SECTION 2D
SCALE 1/4" = 1'-0"

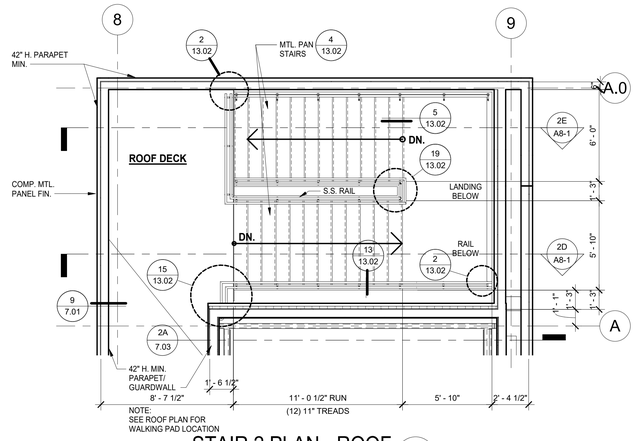

STAIR 2 PLAN - ROOF 2C
SCALE 1/4" = 1'-0"

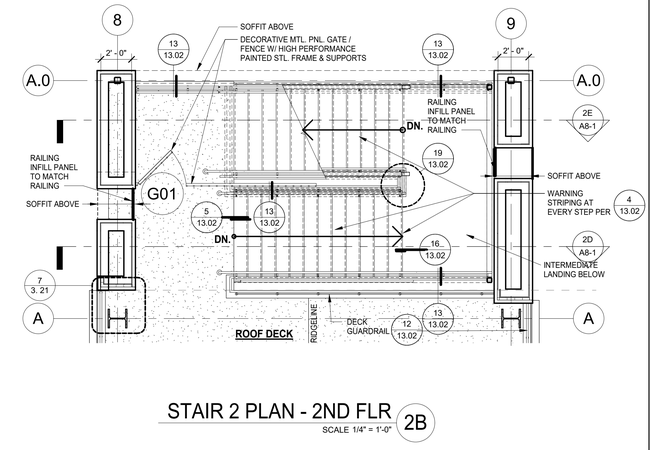

STAIR 2 PLAN - 2ND FLR 2B
SCALE 1/4" = 1'-0"

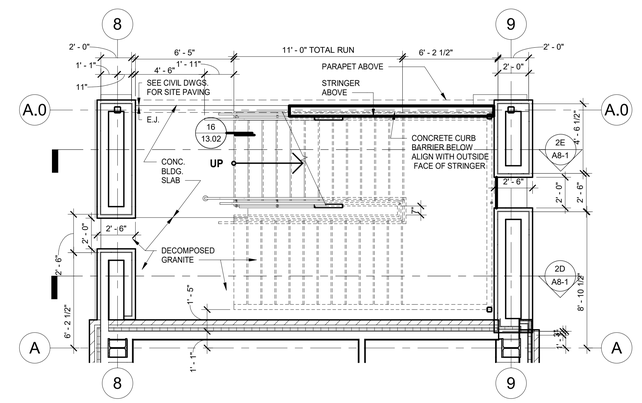

STAIR 2 PLAN - 1ST FLR 2A
SCALE 1/4" = 1'-0"

NOTE: ALL STAIRS ARE STEEL AND FINISH SHALL BE HIGH-PERFORMANCE COATING. BASIS OF DESIGN: TNEMEC FLUORONAR SERIES 1071V

4/10/2019 11:30:50 AM

INTERIOR STAIR 1 | 1

EXTERIOR STAIR 2 | 2

IDENTIFICATION STAMP
DIV. OF THE STATE ARCHITECT
APP. 03-119458 INC:
REVIEWED FOR
SS ☑ FLS ☑ ACS ☑
DATE:05/23/2019

DIVISION OF THE STATE ARCHITECT
355 South Grand Avenue, Suite 2100
Los Angeles, CA 90012
ph: (213) 897-3995 fx:(213) 897-3159

agency

tBP
architecture
planning
interiors

tBP/Architecture
4611 Teller Avenue
Newport Beach, CA 92660
ph: 949.673.0300 fx: 949.732.3895

architect

consultant

COMPTON COLLEGE
INSTRUCTIONAL BUILDING No.2
COMPTON COMMUNITY COLLEGE DISTRICT
1111 E. ARTESIA BLVD. COMPTON, CA.

owner

tBP project number: 20998.00
file name:
drawn by: checked by:
date: 04/08/2019

rev:	date:	description:

THIS DRAWING AND THE DESIGNS, DEPICTIONS, IDEAS AND OTHER INFORMATION CONTAINED HEREIN CONSTITUTE UNPUBLISHED WORK OF tBP/ARCHITECTURE AND SHALL REMAIN PROPERTY OF tBP/ARCHITECTURE IN PERPETUITY. NO PART THEREOF SHALL BE REPRODUCED, DISCLOSED, DISTRIBUTED, SOLD, PUBLISHED OR OTHERWISE USED IN ANY WAY WITHOUT THE ADVANCED EXPRESS WRITTEN CONSENT OF tBP/ARCHITECTURE.

drawing title:
ENLARGED PLANS &
SECTIONS - STAIRS

drawing no.:
A8-1
drawing of

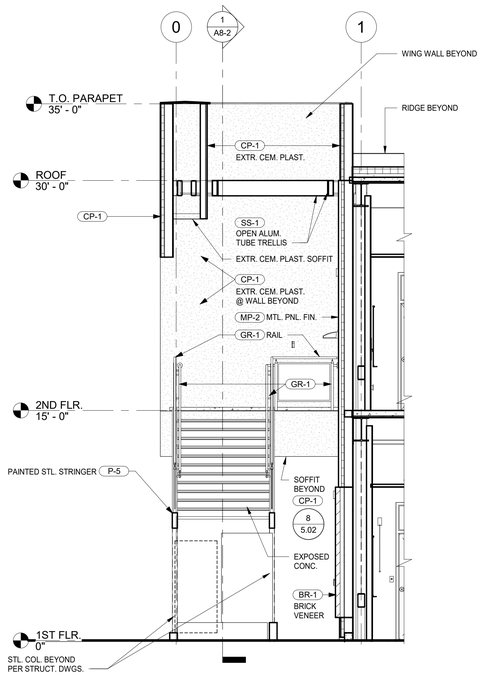

STAIR 3 SECTION @ MID-LANDING 4

SCALE 1/4" = 1'-0"

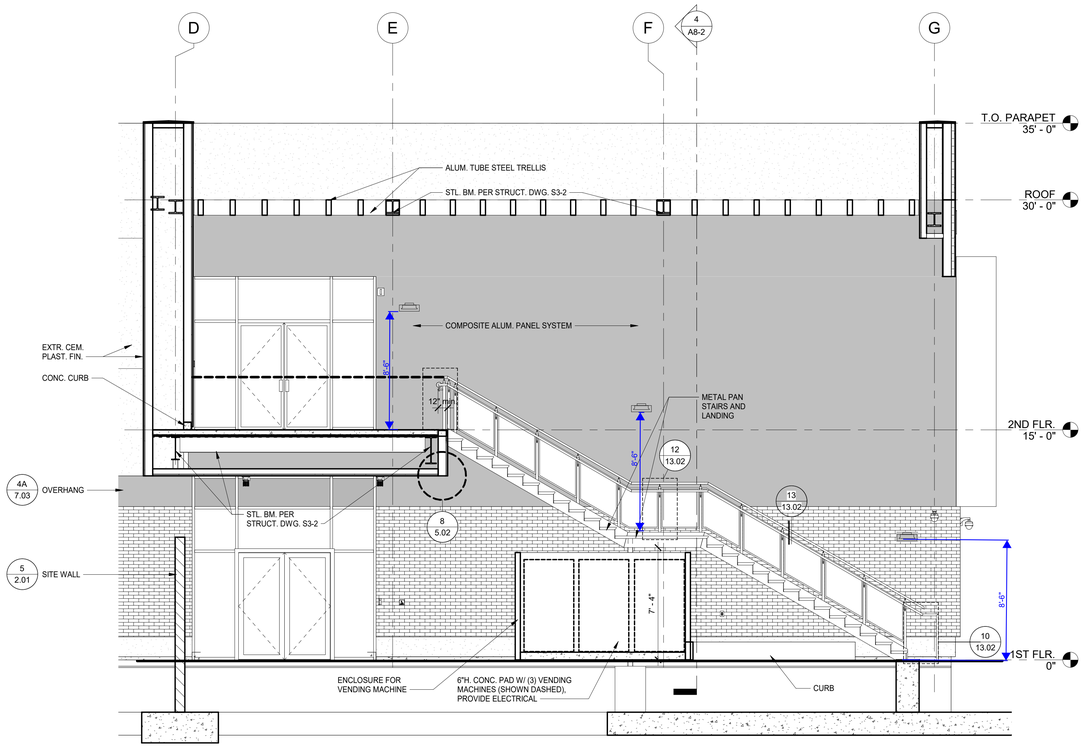

STAIR 3 SECTION 1

SCALE 1/4" = 1'-0"

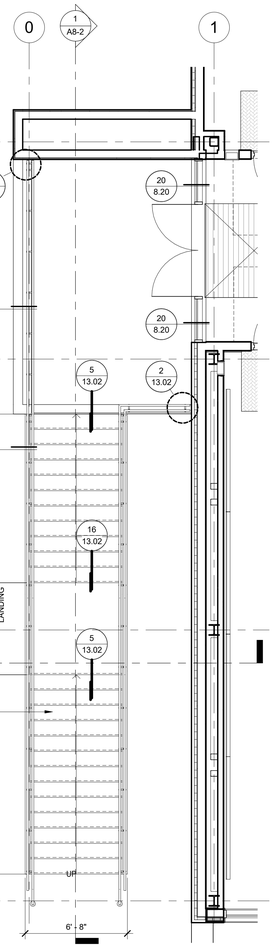

STAIR 3 PLAN - 2ND FLR 2

SCALE 1/4" = 1'-0"

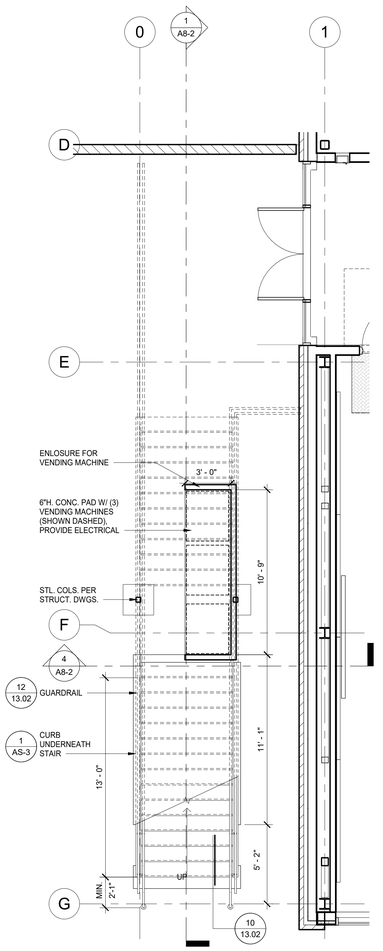

STAIR 3 PLAN - 1ST FLR 3

SCALE 1/4" = 1'-0"

4/10/2019 11:30:53 AM

IDENTIFICATION STAMP
DIV. OF THE STATE ARCHITECT
APP. 03-119458 INC:
REVIEWED FOR
SS ☑ FLS ☑ ACS ☑
DATE:05/23/2019

DIVISION OF THE STATE ARCHITECT
355 South Grand Avenue, Suite 2100
Los Angeles, CA 90012
ph: (213) 897-3995 fx:(213) 897-3159

agency

tBP
architecture
planning
interiors

tBP/Architecture
4611 Teller Avenue
Newport Beach, CA 92660
ph: 949.673.0300 fx: 949.732.3895

LICENSED ARCHITECT
GEOFF PAIGE MOSS
No. C25409
7-31-19
STATE OF CALIFORNIA

architect

consultant

COMPTON COLLEGE
INSTRUCTIONAL BUILDING No.2

COMPTON COMMUNITY COLLEGE DISTRICT
1111 E. ARTESIA BLVD. COMPTON, CA.

owner

tBP project number: 20998.00
file name:
drawn by: checked by:
date: 04/08/2019

rev:	date:	description:

THIS DRAWING AND THE DESIGNS, DEPICTIONS, IDEAS AND OTHER INFORMATION CONTAINED HEREIN CONSTITUTE UNPUBLISHED WORK BY tBP/ARCHITECTURE AND SHALL REMAIN PROPERTY OF tBP/ARCHITECTURE IN PERPETUITY. NO PART THEREOF SHALL BE REPRODUCED, DISCLOSED, DISTRIBUTED, SOLD, PUBLISHED OR OTHERWISE USED IN ANY WAY WITHOUT THE ADVANCED EXPRESS WRITTEN CONSENT OF tBP/ARCHITECTURE.

drawing title:
ENLARGED PLANS/
SECTIONS STAIR 3

drawing no.:
A8-2
drawing of

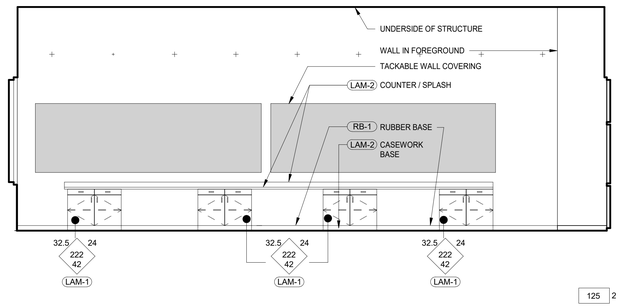

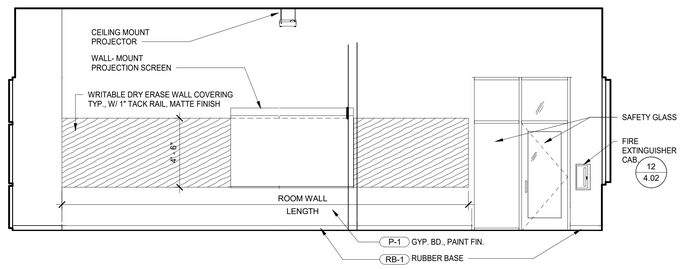

HUMANITIES LAB
SCALE: 1/4"= 1'-0" — 125

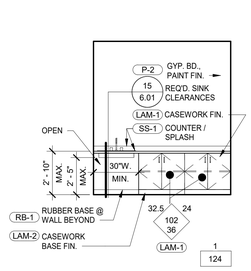

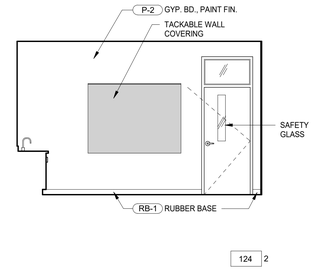

LOUNGE
SCALE: 1/4"= 1'-0" — 124

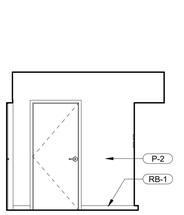

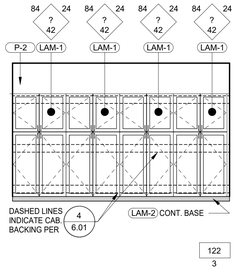

STORAGE
SCALE: 1/4"= 1'-0" — 122

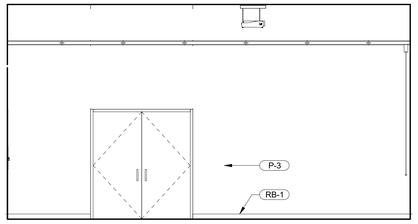

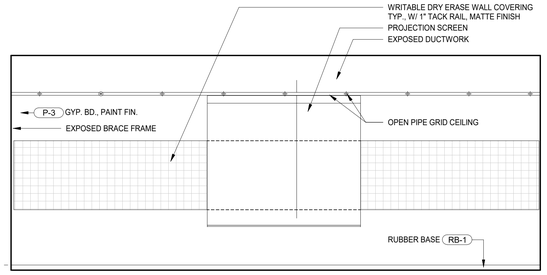

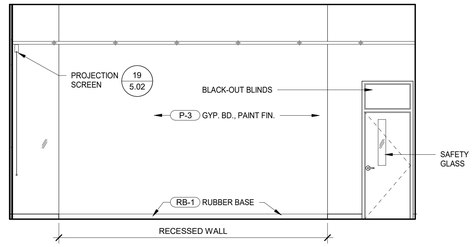

TEACHING WALL - AUDIO / VISUAL
SCALE: 1/4"= 1'-0" — 121

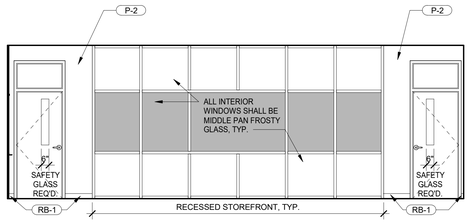

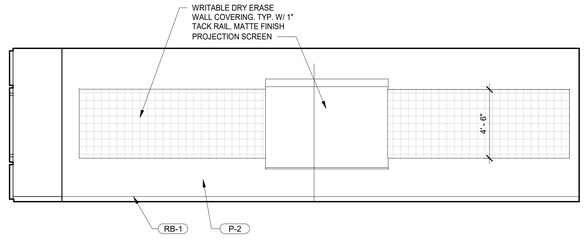

TEACHING WALL - HUM. LAB COMP 1
SCALE: 1/4"= 1'-0" — 120

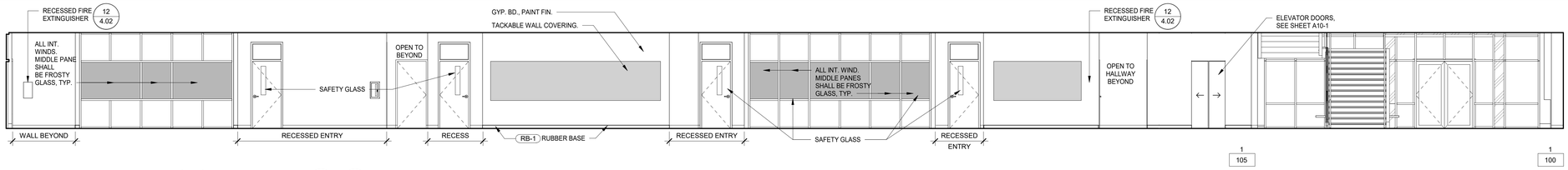

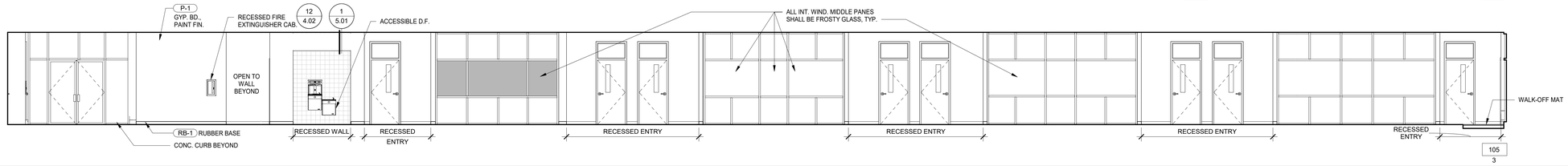

CORRIDOR AND LOBBY
SCALE: 3/16"= 1'-0" — 105

4/10/2019 11:30:58 AM

IDENTIFICATION STAMP
DIV. OF THE STATE ARCHITECT
APP. 03-119458 INC:
REVIEWED FOR
SS ☑ FLS ☑ ACS ☑
DATE:05/23/2019

DIVISION OF THE STATE ARCHITECT
355 South Grand Avenue, Suite 2100
Los Angeles, CA 90012
ph: (213) 897-3995 fx:(213) 897-3159

agency

tBP
architecture
planning
interiors

LICENSED ARCHITECT
GREGORY PAIGE MCKAY
No. C25409
7-31-19
STATE OF CALIFORNIA

tBP/Architecture
4611 Teller Avenue
Newport Beach, CA 92660
ph: 949.673.0300 fx: 949.732.3895

architect

consultant

COMPTON COLLEGE
INSTRUCTIONAL BUILDING No.2
COMPTON COMMUNITY COLLEGE DISTRICT
1111 E. ARTESIA BLVD. COMPTON, CA.

owner

tBP project number: 20998.00
file name:
drawn by: checked by:
date: 04/08/2019

rev:	date:	description:

THIS DRAWING AND THE DESIGNS, DEPICTIONS, IDEAS AND OTHER INFORMATION CONTAINED HEREIN CONSTITUTE UNPUBLISHED WORK OF tBP/ARCHITECTURE AND SHALL REMAIN PROPERTY OF tBP/ARCHITECTURE IN PERPETUITY. NO PART THEREOF SHALL BE REPRODUCED, DISCLOSED, DISTRIBUTED, SOLD, PUBLISHED OR OTHERWISE USED IN ANY WAY WITHOUT THE ADVANCED EXPRESS WRITTEN CONSENT OF tBP/ARCHITECTURE.

drawing title:
INTERIOR ELEVATIONS

drawing no.:
A9-1
drawing of

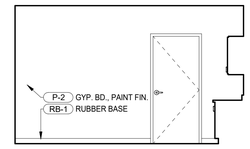

230 2

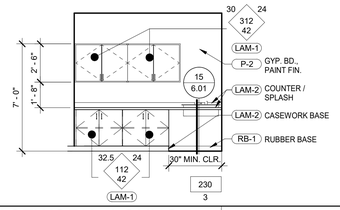

CASEWORK - LOUNGE

SCALE: 1/4"= 1'-0"

230

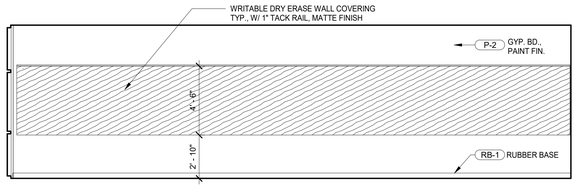

226 2

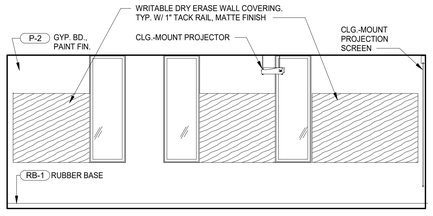

226 3

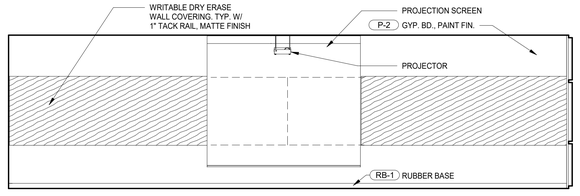

4 226

STUDY - COMPUTERS

SCALE: 1/4"= 1'-0"

226

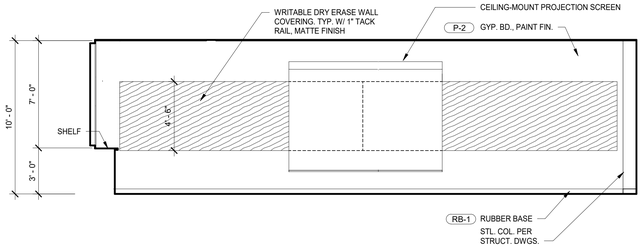

220 2

TEACHING WALL - MEETING ROOM

SCALE: 1/4"= 1'-0"

220

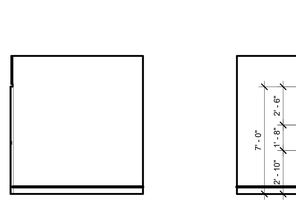

1 201

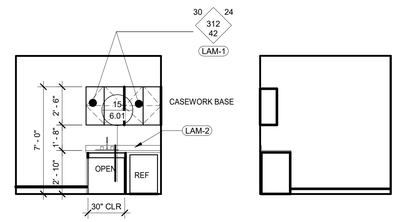

201 2

201 3

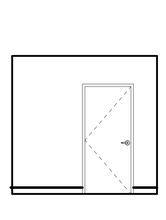

4 201

LACTATION

SCALE: 1/4"= 1'-0"

201

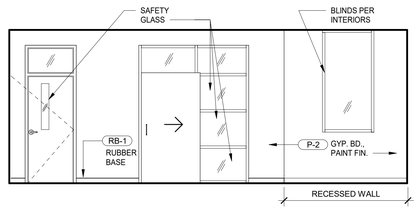

142 2 141 2

WAITING

SCALE: 1/4"= 1'-0"

141, 142

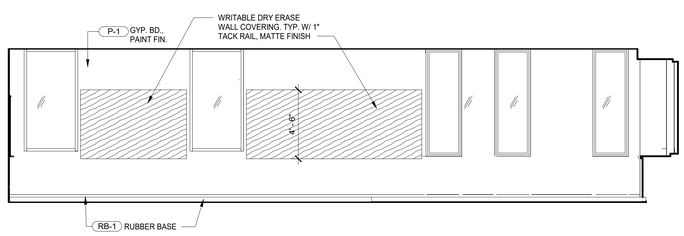

130 2

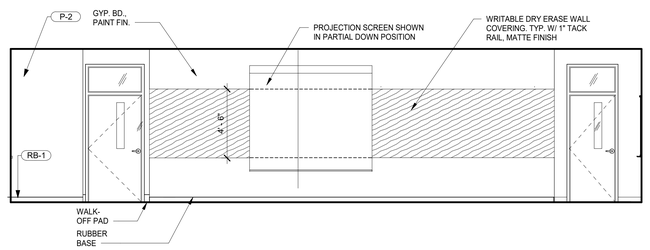

4 130

HUM. LAB COMP 2

SCALE: 1/4"= 1'-0"

130

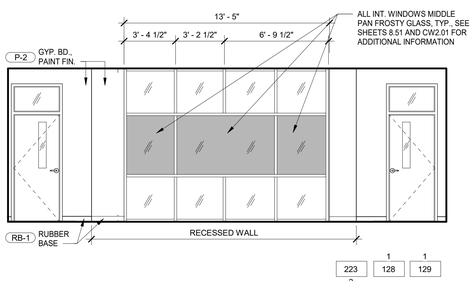

223 3 1 128 1 129

MEETING ROOM 1

SCALE: 1/4"= 1'-0"

129

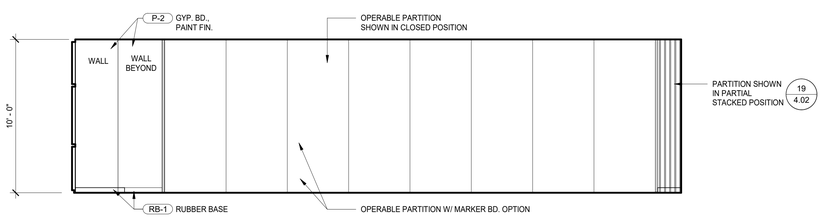

126 2

4 127 OPP.

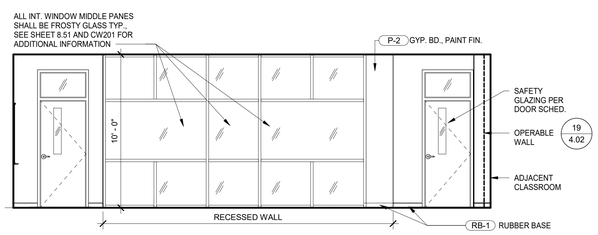

126 2

1 127

C.R.1

SCALE: 1/4"= 1'-0"

126

4/10/2019 11:31:01 AM

IDENTIFICATION STAMP
DIV. OF THE STATE ARCHITECT
APP. 03-119458 INC:
REVIEWED FOR
SS ☑ FLS ☑ ACS ☑
DATE: 05/23/2019

DIVISION OF THE STATE ARCHITECT
355 South Grand Avenue, Suite 2100
Los Angeles, CA 90012
ph: (213) 897-3995 fx:(213) 897-3159

agency

tBP architecture planning interiors

tBP/Architecture
4611 Teller Avenue
Newport Beach, CA 92660
ph: 949.673.0300 fx: 949.732.3895

LICENSED ARCHITECT — GREGORY PAIGE MCVEY — No. C25409 — REN: 1-31-21 — STATE OF CALIFORNIA

architect

consultant

COMPTON COLLEGE
INSTRUCTIONAL BUILDING No.2
COMPTON COMMUNITY COLLEGE DISTRICT
1111 E. ARTESIA BLVD. COMPTON, CA.

owner

tBP project number: 20998.00
file name:
drawn by: checked by:
date: 04/08/2019

rev:	date:	description:

THIS DRAWING AND THE DESIGNS, DEPICTIONS, IDEAS AND OTHER INFORMATION CONTAINED HEREIN CONSTITUTE UNPUBLISHED WORK OF tBP/ARCHITECTURE AND SHALL REMAIN PROPERTY OF tBP/ARCHITECTURE IN PERPETUITY. NO PART THEREOF SHALL BE REPRODUCED, DISCLOSED, DISTRIBUTED, SOLD, PUBLISHED OR OTHERWISE USED IN ANY WAY WITHOUT THE ADVANCED EXPRESS WRITTEN APPROVAL OF tBP/ARCHITECTURE.

drawing title:
INTERIOR ELEVATIONS

drawing no.:
A9-2
drawing of

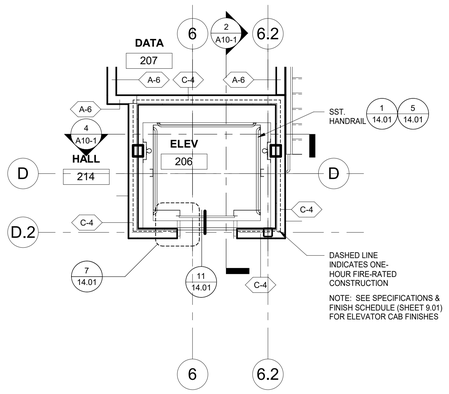

ENLARGED ELEVATOR PLAN - SECOND FLOOR 1

SCALE 1/4" = 1'-0"

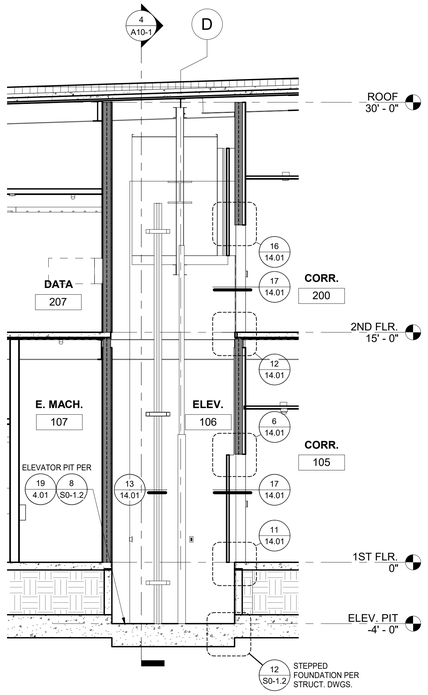

ELEVATOR SECTION 1 2

SCALE 1/4" = 1'-0"

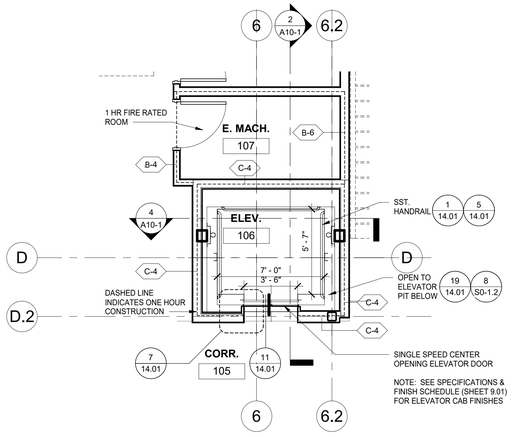

ENLARGED ELEVATOR PLAN - FIRST FLOOR 3

SCALE 1/4" = 1'-0"

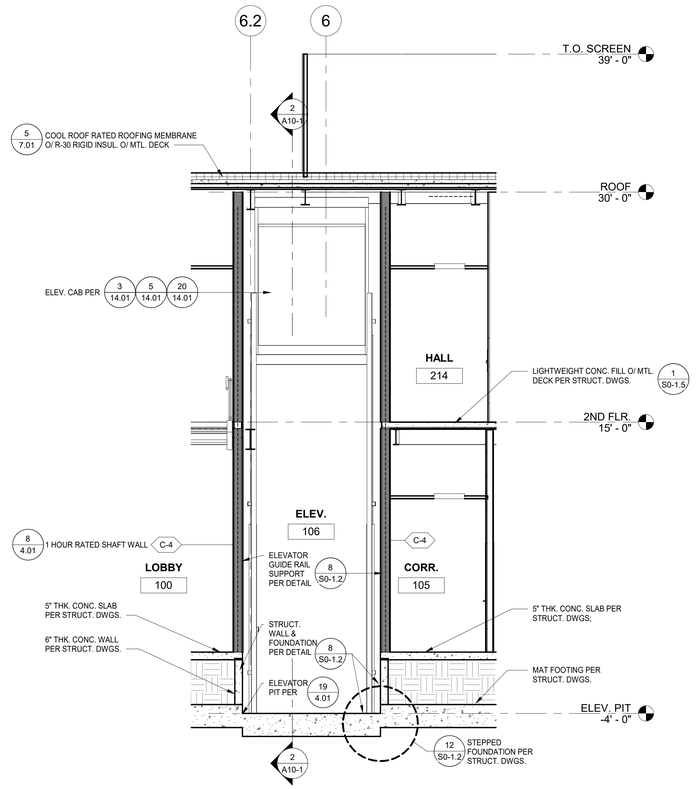

ELEVATOR SECTION 2 4

SCALE 1/4" = 1'-0"

STRUCTURAL BASIS OF DESIGN:
MAX CAR WT = 4,500 #
MAX CAR CAPACITY = 4,000 #
SEE S0-0.1 FOR SEISMIC DESIGN PARAMETERS

BASIS OF DESIGN:
MFR: THYSSEN KRUPP
MODEL: ENDURA AMEE 35 HLS
DESCRIPTION: TWIN-POST, ABOVE-GROUND TELESCOPIC 2 STAGE HYDRAULIC ELEVATOR

4/10/2019 11:31:04 AM

IDENTIFICATION STAMP
DIV. OF THE STATE ARCHITECT
APP. 03-119458 INC:
REVIEWED FOR
SS ☑ FLS ☑ ACS ☑
DATE:05/23/2019

DIVISION OF THE STATE ARCHITECT
355 South Grand Avenue, Suite 2100
Los Angeles, CA 90012
ph: (213) 897-3995 fx:(213) 897-3159

agency

tBP
architecture
planning
interiors

LICENSED ARCHITECT
GEOFF PAIGE MOSS
No. C25409
7-31-19
STATE OF CALIFORNIA

tBP/Architecture
4611 Teller Avenue
Newport Beach, CA 92660
ph: 949.673.0300 fx: 949.732.3895

architect

consultant

COMPTON COLLEGE
INSTRUCTIONAL BUILDING No.2
COMPTON COMMUNITY COLLEGE DISTRICT
1111 E. ARTESIA BLVD. COMPTON, CA.

owner

tBP project number: 20998.00
file name:
drawn by: checked by:
date: 04/08/2019

rev:	date:	description:

THIS DRAWING AND THE DESIGNS, DEPICTIONS, IDEAS AND OTHER INFORMATION CONTAINED HEREIN CONSTITUTE UNPUBLISHED WORK OF tBP/ARCHITECTURE AND SHALL REMAIN PROPERTY OF tBP/ARCHITECTURE IN PERPETUITY. NO PART THEREOF SHALL BE REPRODUCED, DISCLOSED, DISTRIBUTED, SOLD, PUBLISHED OR OTHERWISE USED IN ANY WAY WITHOUT THE ADVANCED EXPRESS WRITTEN CONSENT OF tBP/ARCHITECTURE.

drawing title:
ELEVATOR PLANS / SECTIONS

drawing n
A10-1

drawing of

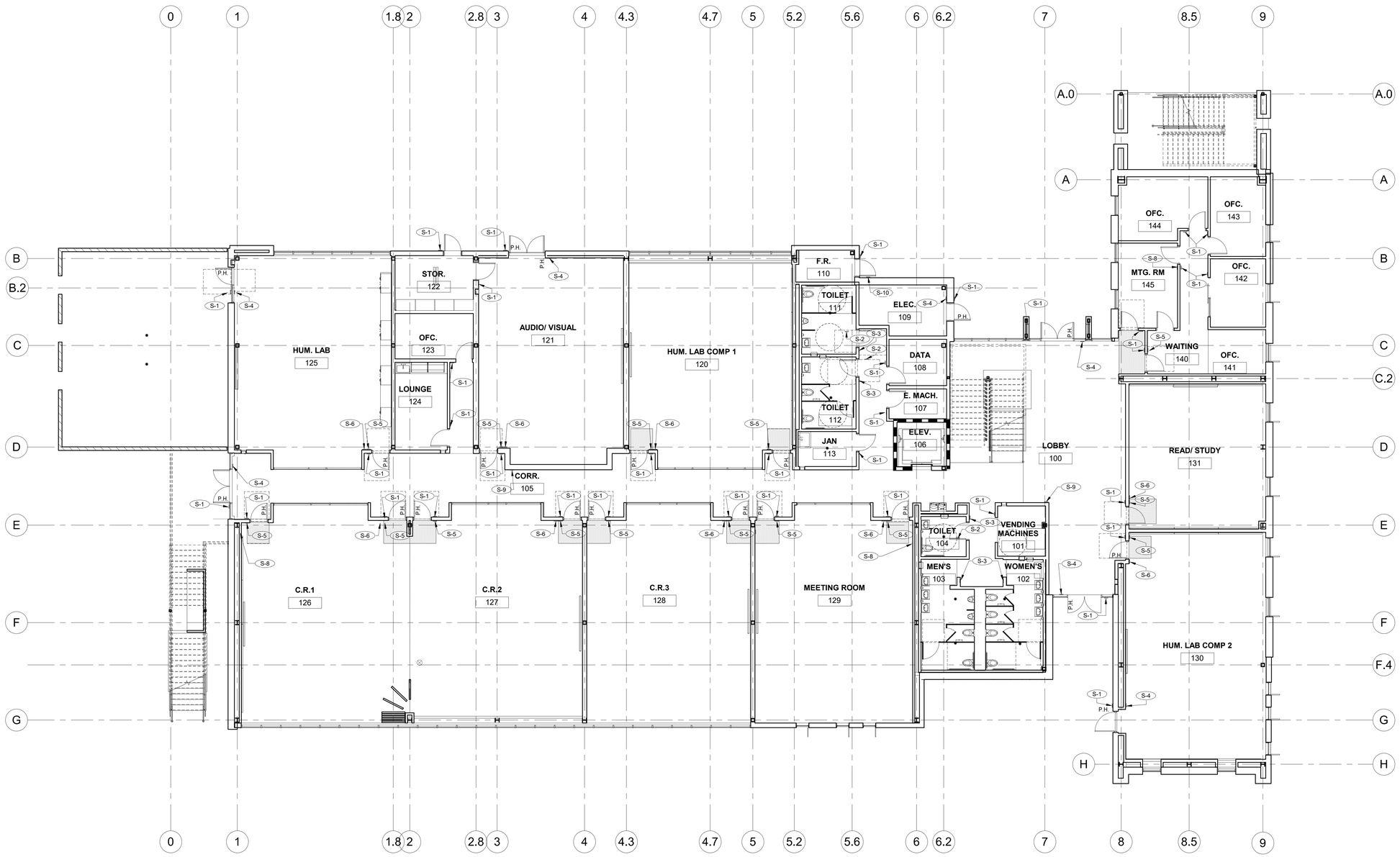

1ST FLOOR PLAN SIGNAGE PLAN 1

SCALE 1/8" = 1'-0"

NORTH

0' 2' 4' 8' 16'

SIGNAGE LEGEND

S-1	ROOM NAME/ NUMBER SIGN, SEE DOOR SCHEDULE	11 / 11.01
S-2	TOILET ROOM DOOR SIGN, SEE DOOR SCHEDULE	5 / 11.01
S-3	TOILET ROOM WALL SIGN, SEE DOOR SCHEDULE	5 / 11.01
S-4	TACTILE "EXIT" SIGN (INTERIOR), SEE	9 / 11.01
S-5	TACTILE "EXIT ROUTE" SIGN (INTERIOR), SEE	8 / 11.01
S-6	"MAXIMUM OCCUPANCY" SIGN (INTERIOR), SEE	13 / 11.01
S-7	ACCESSIBLE ENTRANCE SIGN (EXTERIOR), SEE	14 / 11.01
S-8	"ASSISTIVE LISTENING DEVICE" SIGN (INTERIOR), SEE	12 / 11.01
S-9	ELEVATOR DIRECTIONAL SIGN, SEE	15 / 11.01
S-10	"FIRE SPRINKLER RISER INSIDE" SIGN, SEE	16 / 11.01
S-11	"2 WAY COMMUNCATION" SIGN, SEE	16 / 11.02

IDENTIFICATION STAMP
DIV. OF THE STATE ARCHITECT
APP. 03-119458 INC:
REVIEWED FOR
SS ☑ FLS ☑ ACS ☑
DATE:05/23/2019

DIVISION OF THE STATE ARCHITECT
355 South Grand Avenue, Suite 2100
Los Angeles, CA 90012
ph: (213) 897-3995 fx:(213) 897-3159

agency

tBP architecture planning interiors

LICENSED ARCHITECT
GARY PAIGE MOON
NO. C25409
REN. 7-31-11
STATE OF CALIFORNIA

tBP/Architecture
4611 Teller Avenue
Newport Beach, CA 92660
ph: 949.673.0300 fx: 949.732.3895

architect

consultant

COMPTON COLLEGE
INSTRUCTIONAL BUILDING No.2

COMPTON COMMUNITY COLLEGE DISTRICT
1111 E. ARTESIA BLVD. COMPTON, CA.

owner

tBP project number: 20998.00

file name:

drawn by: checked by:

date: 04/08/2019

rev:	date:	description:

THIS DRAWING AND THE DESIGNS, DEPICTIONS, IDEAS AND OTHER INFORMATION CONTAINED HEREIN CONSTITUTE UNPUBLISHED WORK OF tBP/ARCHITECTURE AND SHALL REMAIN PROPERTY OF tBP/ARCHITECTURE IN PERPETUITY. NO PART THEREOF SHALL BE REPRODUCED, DISCLOSED, DISTRIBUTED, SOLD, PUBLISHED OR OTHERWISE USED IN ANY WAY WITHOUT THE ADVANCED EXPRESS WRITTEN CONSENT OF tBP/ARCHITECTURE

drawing title:
SIGNAGE PLAN - FIRST FLOOR

drawing n

A12-1

drawing of

4/10/2019 11:31:07 AM

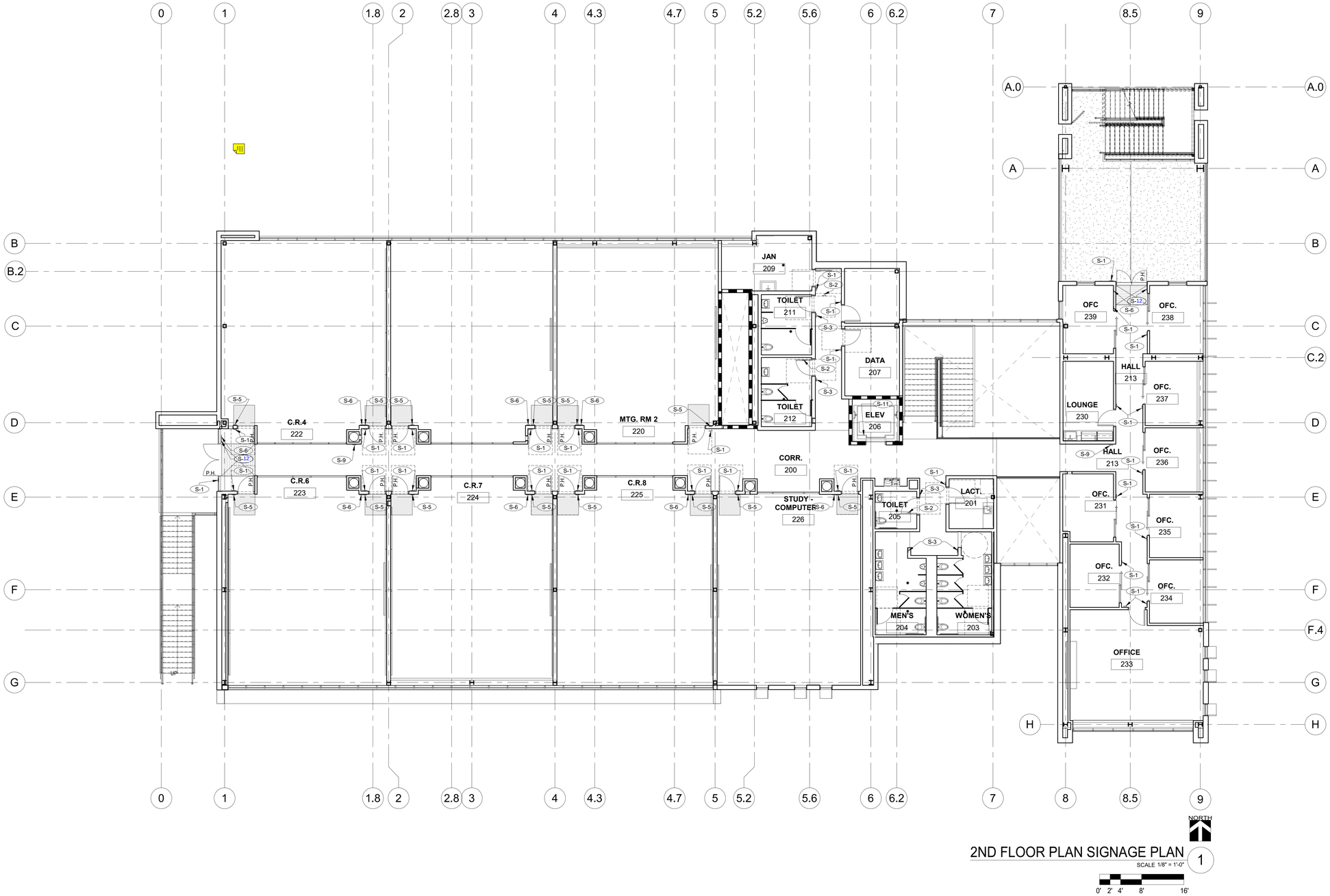

2ND FLOOR PLAN SIGNAGE PLAN

SCALE 1/8" = 1'-0"

0' 2' 4' 8' 16'

SIGNAGE LEGEND

S-1	ROOM NAME/ NUMBER SIGN, SEE DOOR SCHEDULE	11 / 11.01
S-2	TOILET ROOM DOOR SIGN, SEE DOOR SCHEDULE	5 / 11.01
S-3	TOILET ROOM WALL SIGN, SEE DOOR SCHEDULE	5 / 11.01
S-4	TACTILE "EXIT" SIGN (INTERIOR), SEE	9 / 11.01
S-5	TACTILE "EXIT ROUTE" SIGN (INTERIOR), SEE	8 / 11.01
S-6	"MAXIMUM OCCUPANCY" SIGN (INTERIOR), SEE	13 / 11.01
S-7	ACCESSIBLE ENTRANCE SIGN (EXTERIOR), SEE	14 / 11.01
S-8	"ASSISTIVE LISTENING DEVICE" SIGN (INTERIOR), SEE	12 / 11.01
S-9	ELEVATOR DIRECTIONAL SIGN, SEE	15 / 11.01
S-10	"FIRE SPRINKLER RISER INSIDE" SIGN, SEE	16 / 11.01
S-11	"2 WAY COMMUNCATION" SIGN, SEE	16 / 11.02
S-12	TACTILE "EXIT STAIR DOWN" SIGN	18 / 11.01

IDENTIFICATION STAMP
DIV. OF THE STATE ARCHITECT
APP. 03-119458 INC:
REVIEWED FOR
SS ☑ FLS ☑ ACS ☑
DATE:05/23/2019

DIVISION OF STATE ARCHITECT
355 South Grand Avenue, Suite 2100
Los Angeles, California. 90012
ph: (213) 897-3995 Fax: (213) 897-3159
agency

tBP architecture planning interiors

LICENSED ARCHITECT
GARY PAIGE MOON
NO. C25409
REN. 7-31-19
STATE OF CALIFORNIA

tBP/Architecture
4611 Teller Avenue
Newport Beach, CA 92660
ph: 949.673.0300 fx: 949.732.3895
architect

consultant

COMPTON COLLEGE
INSTRUCTIONAL BUILDING No.2

COMPTON COMMUNITY COLLEGE DISTRICT
1111 E. ARTESIA BLVD. COMPTON, CA.
owner

tBP project number: 20998.00
file name:
drawn by: checked by:
date: 11 / 20 / 2018

rev:	date:	description:

THIS DRAWING AND THE DESIGNS, DEPICTIONS, IDEAS AND OTHER INFORMATION CONTAINED HEREIN CONSTITUTE UNPUBLISHED WORK OF tBP/ARCHITECTURE AND SHALL REMAIN PROPERTY OF tBP/ARCHITECTURE IN PERPETUITY. NO PART THEREOF SHALL BE REPRODUCED, DISCLOSED, DISTRIBUTED, SOLD, PUBLISHED OR OTHERWISE USED IN ANY WAY WITHOUT THE ADVANCED EXPRESS WRITTEN CONSENT OF tBP/ARCHITECTURE.

drawing title:
SIGNAGE PLAN - SECOND FLOOR

drawing n
A12-2
drawing of

4/10/2019 11:31:09 AM

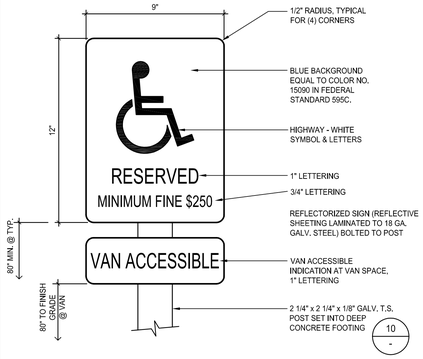

ACCESSIBLE PARKING STALL SIGN — SCALE: 3" = 1'-0" — 1

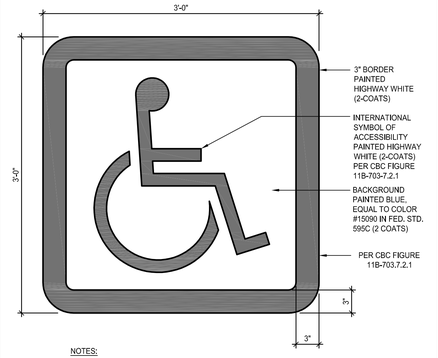

NOTES:

SYMBOL SHALL BE LOCATED SUCH THAT IT IS VISIBLE TO A TRAFFIC ENFORCEMENT OFFICER WHEN A VEHICLE IS PROPERLY PARKED IN THE STALL.

ACCESSIBLE PARKING SYMBOL — SCALE: 1-1/2" = 1'-0" — 2

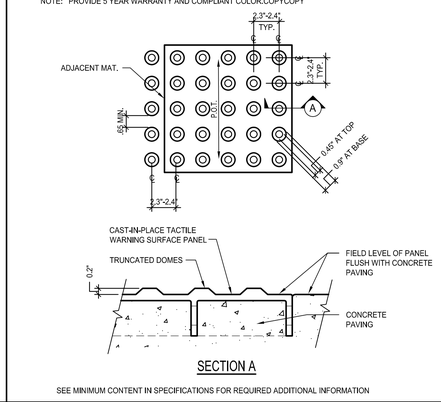

SECTION A

SEE MINIMUM CONTENT IN SPECIFICATIONS FOR REQUIRED ADDITIONAL INFORMATION

TACTILE PANELS — SCALE: 3" = 1'-0" — 3

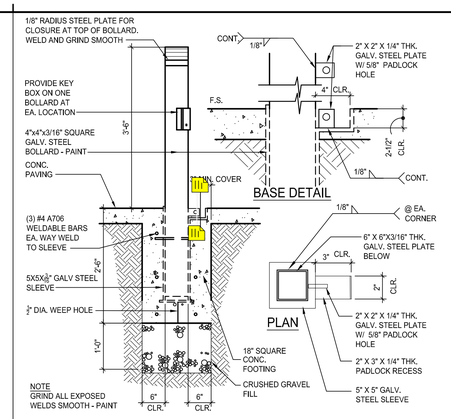

NOTE
GRIND ALL EXPOSED WELDS SMOOTH - PAINT

REMOVABLE BOLLARD DETAIL — SCALE: 3/4" = 1'-0" — 4

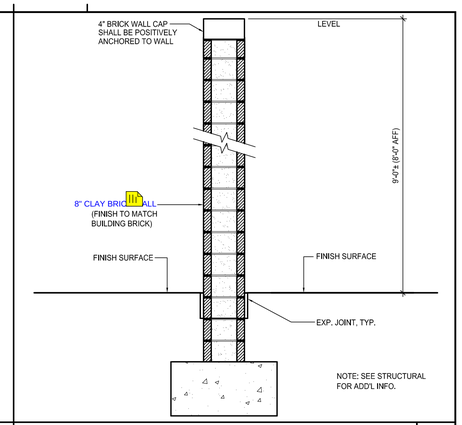

NOTE: SEE STRUCTURAL FOR ADD'L INFO.

SITE BRICK WALL SECTION — SCALE: 1" = 1'-0" — 5

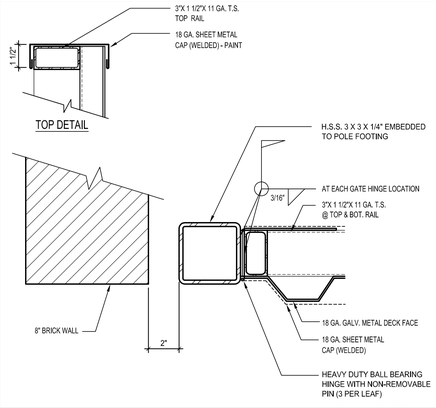

HINGE DETAIL AT SHEET METAL GATE — SCALE: 3" = 1'-0" — 6

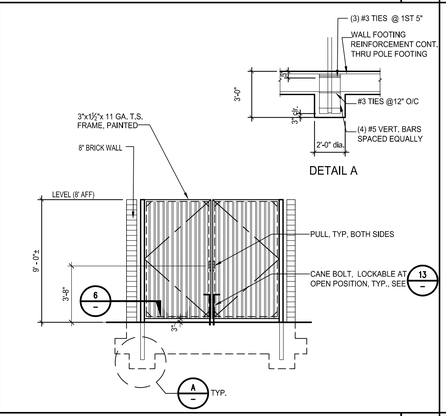

TRASH ENCLOSURE — SCALE: 1/4" = 1'-0" — 7

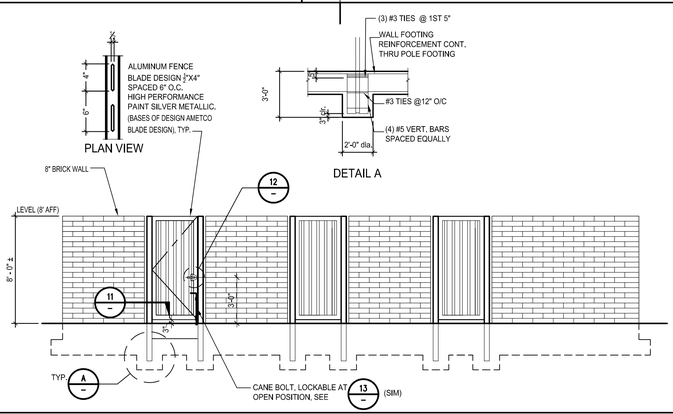

POETRY YARD METAL GATE AND PANELS — SCALE: 1/4" = 1'-0" — 9

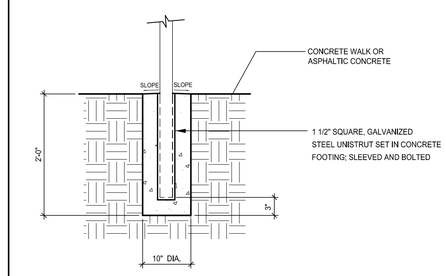

SIGNAGE FOOTING — SCALE: 1" = 1'-0" — 10

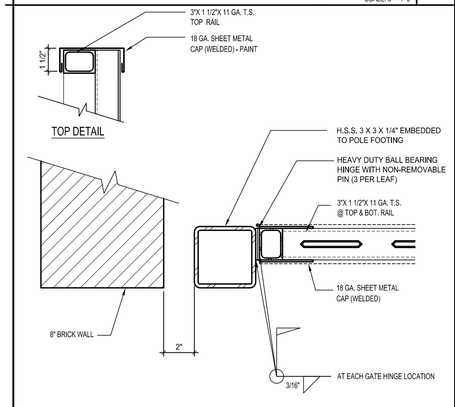

HINGE DETAIL AT ALUM. BLADE GATE — SCALE: 3" = 1'-0" — 11

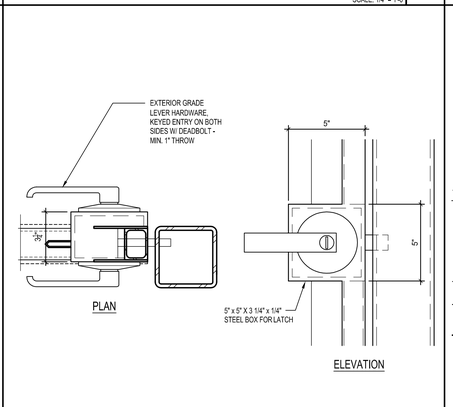

LEVER HARDWARE — SCALE: 3" = 1'-0" — 12

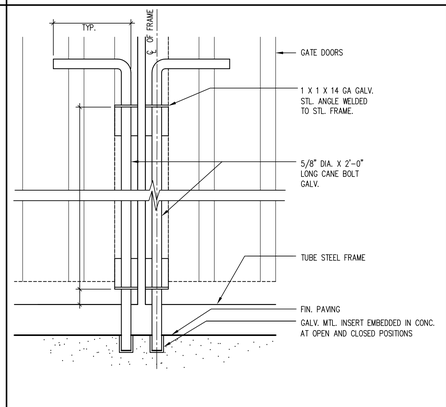

CANE BOLT DETAIL — SCALE: 3" = 1'-0" — 13

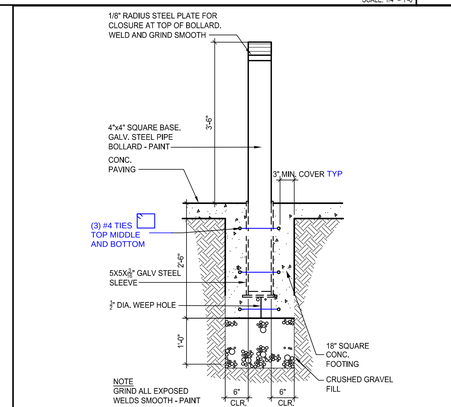

NOTE
GRIND ALL EXPOSED WELDS SMOOTH - PAINT

FIXED BOLLARD DETAIL — SCALE: 3/4" = 1'-0" — 14

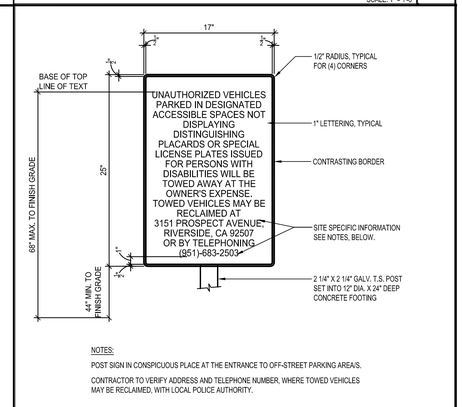

NOTES:

POST SIGN IN CONSPICUOUS PLACE AT THE ENTRANCE TO OFF-STREET PARKING AREAS.

CONTRACTOR TO VERIFY ADDRESS AND TELEPHONE NUMBER, WHERE TOWED VEHICLES MAY BE RECLAIMED, WITH LOCAL POLICE AUTHORITY.

UNAUTHORIZED VEHICLE SIGNAGE — SCALE: 1-1/2" = 1'-0" — 15

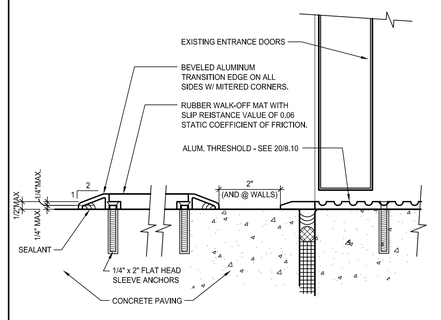

WALK-OFF MAT DETAIL AT (E) DOORS — SCALE: HALF — 20

IDENTIFICATION STAMP
DIV. OF THE STATE ARCHITECT
APP. 03-119458 INC:
REVIEWED FOR
SS ☑ FLS ☑ ACS ☑
DATE:05/23/2019

DIVISION OF STATE ARCHITECT
355 South Grand Avenue, Suite 2100
Los Angeles, California. 90012
ph: (213) 897-3995 Fax: (213) 897-3159
agency

tBP
architecture
planning
interiors

LICENSED ARCHITECT
JEFFREY PAIGE KRUSE
NO. C25409
REN. 7-31-21
STATE OF CALIFORNIA

tBP/Architecture
4611 Teller Avenue
Newport Beach, CA 92660
ph: 949.673.0300 fx: 949.732.3895
architect

consultant

COMPTON COLLEGE
INSTRUCTIONAL BUILDING No. 2

COMPTON COMMUNITY COLLEGE DISTRICT
1111 E. ARTESIA BLVD. COMPTON, CA.

owner

tBP project number : 20998.00

file name:

drawn by: checked by:

date: 04/08/2019

Rev:	date:	description:

THE DRAWING AND THE DESIGNS, DEPICTIONS, IDEAS AND OTHER INFORMATION CONTAINED HEREIN CONSTITUTE UNPUBLISHED WORK OF tBP/ARCHITECTURE AND SHALL REMAIN THE PROPERTY OF tBP/ARCHITECTURE. IT REPRESENTS, AND FOR THERE SHALL BE REPRODUCED, DISCLOSED, DISTRIBUTED, SOLD, PUBLISHED OR OTHERWISE USED IN ANY WAY WITHOUT THE ADVANCED EXPRESS WRITTEN CONSENT OF tBP/ARCHITECTURE.

drawing title:

SITE DETAILS

drawing no.:

2.01

drawing of Y

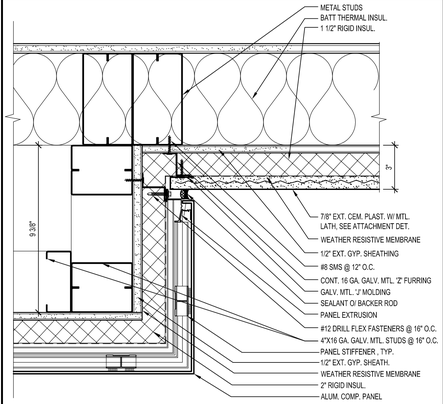

EXTERIOR PLASTER WALL @ MATERIAL CHANGE 1

SCALE: 3" = 1'-0"

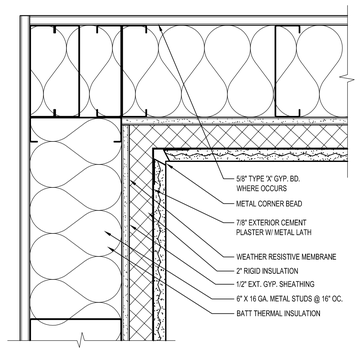

EXTERIOR PLASTER WALL - INSIDE CORNER 2

SCALE: 3" = 1'-0"

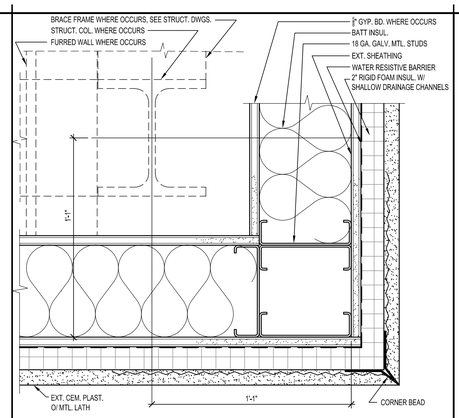

EXTERIOR PLASTER WALL - OUTSIDE CORNER 3

SCALE: 3" = 1'-0"

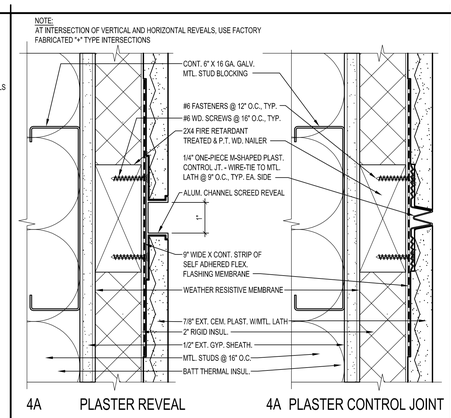

4A PLASTER REVEAL 4A PLASTER CONTROL JOINT

PLASTER REVEAL & CONTROL JOINT - SECTION 4

SCALE: HALF

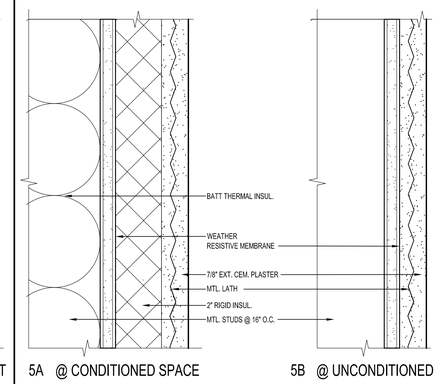

5A @ CONDITIONED SPACE 5B @ UNCONDITIONED

EXTERIOR CEMENT PLASTER SYSTEM 5

SCALE: HALF

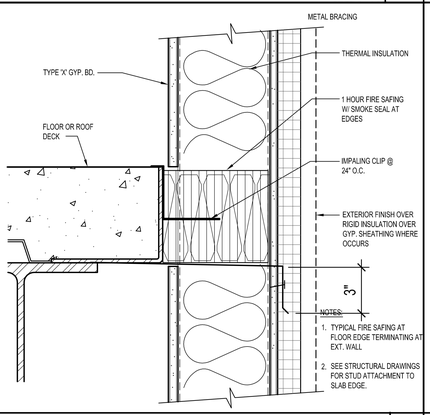

2nd. FLOOR SLAB @ EXT WALL 6

SCALE: 3" = 1'-0"

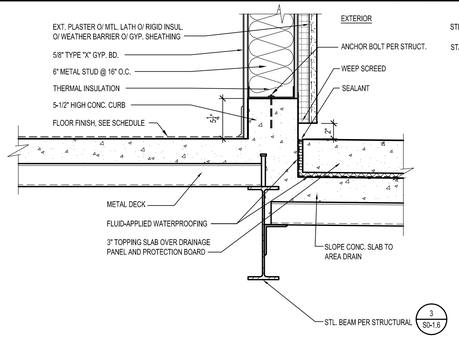

EXTERIOR WALL @ DECK 9A

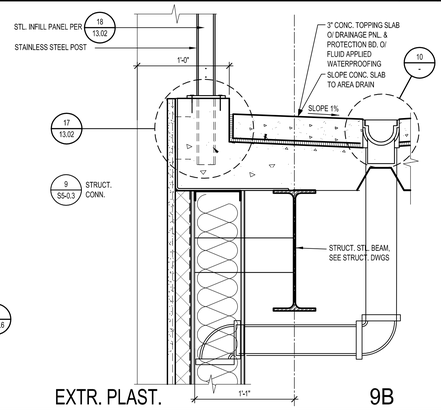

EXTR. PLAST. 9B

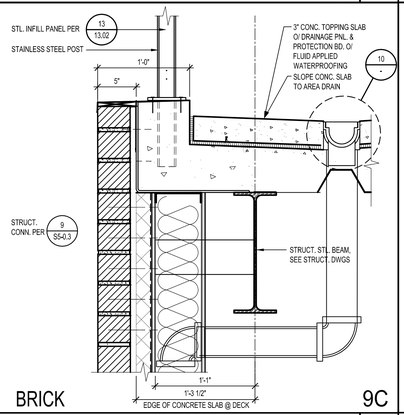

BRICK 9C

CURB SECTIONS @ 2ND FLOOR DECK 9

SCALE: 1-1/2" = 1'-0"

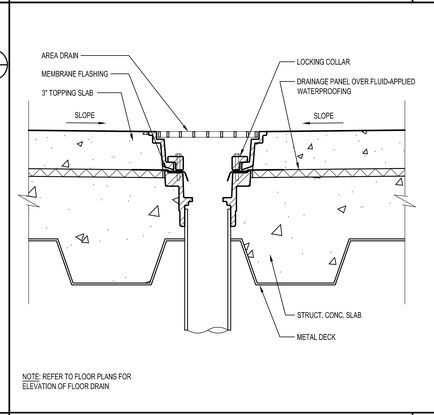

NOTE: REFER TO FLOOR PLANS FOR ELEVATION OF FLOOR DRAIN

AREA DRAIN AT DOUBLE SLAB 10

SCALE: 1-1/2" = 1'-0"

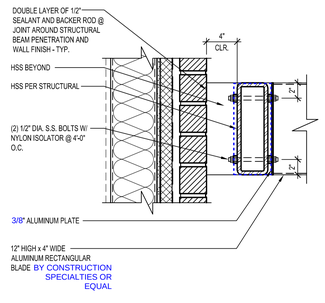

BRICK FINISH 13A

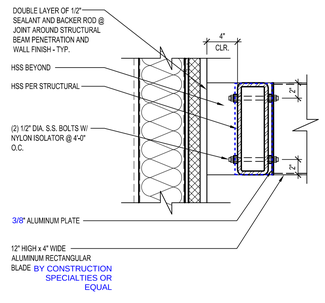

CEM. PLASTER 13B

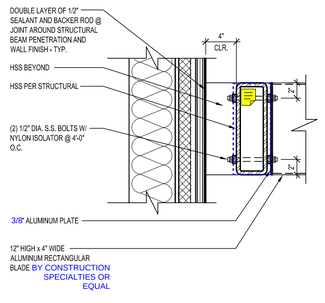

ALUM. COMP. PANEL 13C

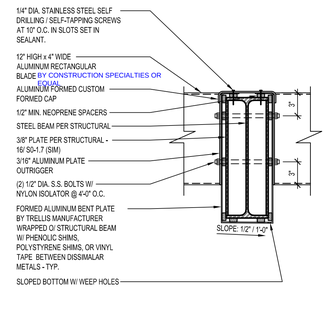

BEAM WRAP 13D

TRELLIS @ EXTERIOR WALL 13

SCALE: 1-1/2" = 1'-0"

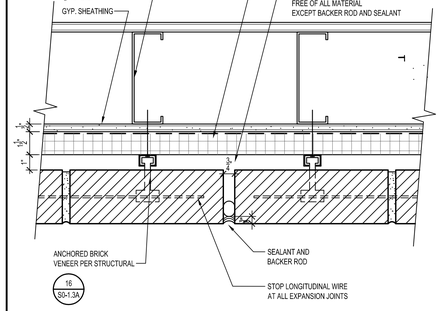

NOTE:
PROVIDE TOOLED VERTICAL JOINTS AND HORIZONTAL RAKED JOINTS TYPICAL

VERTICAL EXPANSION JOINT 14

SCALE: 3" = 1'-0"

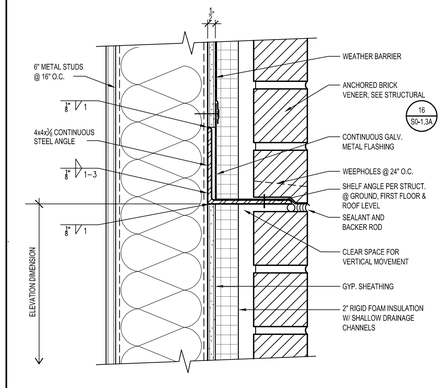

BRICK VENEER 15

SCALE: 3" = 1'-0"

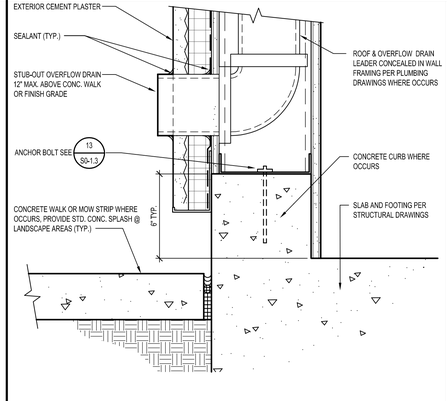

OVERFLOW DRAIN OUTLET 16

SCALE: 3" = 1'-0"

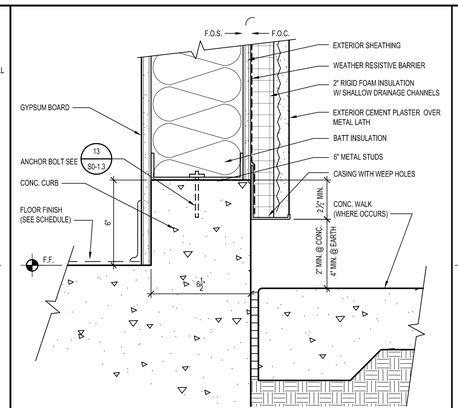

CURB AT EXTERIOR PLASTER WALL 17

SCALE: 3" = 1'-0"

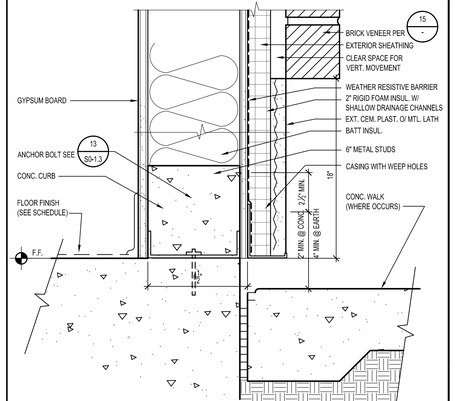

EXTERIOR PLASTER/ BRICK WALL BASE 18

SCALE: 3" = 1'-0"

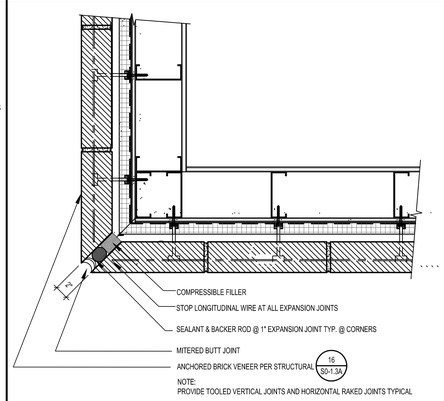

NOTE:
PROVIDE TOOLED VERTICAL JOINTS AND HORIZONTAL RAKED JOINTS TYPICAL

EXTERIOR BRICK VENEER WALL CORNER 19

SCALE: 1-1/2" = 1'-0"

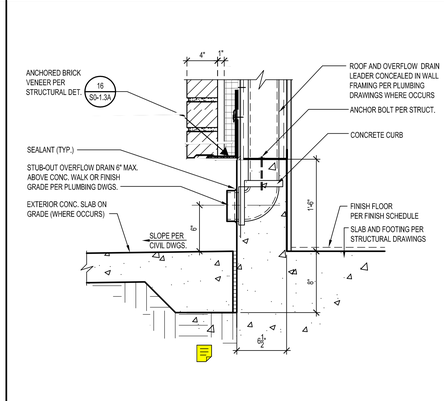

BRICK AT WALL SILL 20

SCALE: 1-1/2" = 1'-0"

IDENTIFICATION STAMP
DIV. OF THE STATE ARCHITECT
APP. 03-119458 INC:
REVIEWED FOR
SS ☑ FLS ☑ ACS ☑
DATE:05/23/2019

DIVISION OF STATE ARCHITECT
355 South Grand Avenue, Suite 2100
Los Angeles, California. 90012
ph: (213) 897-3995 Fax: (213) 897-3159
agency

tBP
architecture
planning
interiors

LICENSED ARCHITECT
CHRISTINE ANN HOON
No. C25409
REN. 7-31-13
STATE OF CALIFORNIA

tBP/Architecture
4611 Teller Avenue
Newport Beach, CA 92660
ph: 949.673.0300 fx: 949.732.3895

architect

consultant

COMPTON COLLEGE
INSTRUCTIONAL BUILDING No. 2

COMPTON COMMUNITY COLLEGE DISTRICT
1111 E. ARTESIA BLVD. COMPTON, CA.

owner

tBP project number : 20998.00

file name: D9-0301.dwg

drawn by: checked by:

date: 04/08/2019

Rev: date: description:

THE DRAWING AND THE DESIGNS, DEFINITIONS, IDEAS AND OTHER INFORMATION CONTAINED HEREIN CONSTITUTE UNPUBLISHED WORK OF tBP/ARCHITECTURE AND SHALL REMAIN THE PROPERTY OF tBP/ARCHITECTURE. NO PORTIONS THEREOF SHALL BE REPRODUCED, DISCLOSED, DISTRIBUTED, SOLD, PUBLISHED OR OTHERWISE USED IN ANY WAY WITHOUT THE ADVANCED EXPRESS WRITTEN CONSENT OF tBP/ARCHITECTURE.

drawing title:
EXTERIOR WALL DETAILS

drawing no.:
3.01
drawing of

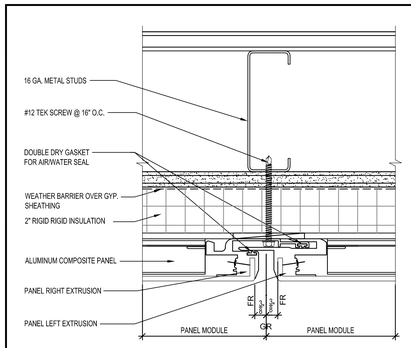

GR = GRID (CENTER OF THE PANEL JOINT)
FR = FACE OF RETURN

COMPLY WITH ICC-ESR-1185

NOTE: FOR VERTICAL APPLICATIONS, A STUD IS REQUIRED AT EVERY VERTICAL JOINT FOR PANEL ATTACHMENT.

ALUM. COMPOSITE PANEL JOINT 1

SCALE: HALF

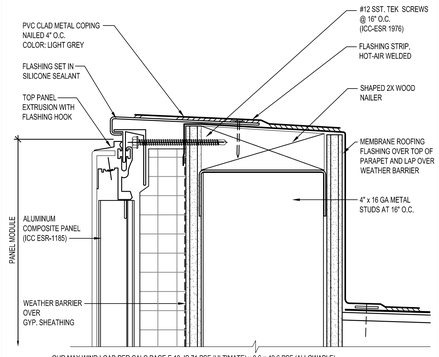

OUR MAX WIND LOAD PER CALC PAGE E.10, IS 71 PSF (ULTIMATE) x 0.6 = 42.6 PSF (ALLOWABLE) WHICH IS LESS THAN 50PSF, OKAY.

ALUM. COMPOSITE PANEL PARAPET 2

SCALE: HALF

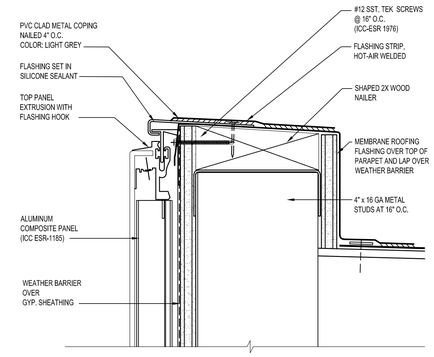

EXT. ENTRY WALL COMPOSITE PANEL PARAPET 3

SCALE: HALF

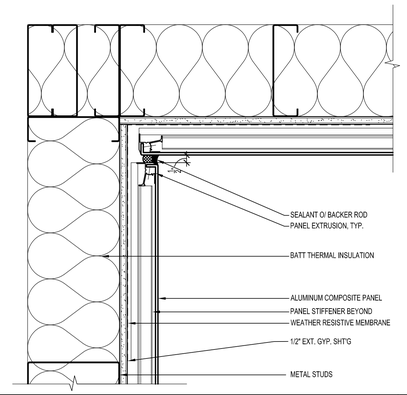

ACP INSIDE CORNER (CEILING/SOFFIT SIM.) 4

SCALE: 3" = 1'-0"

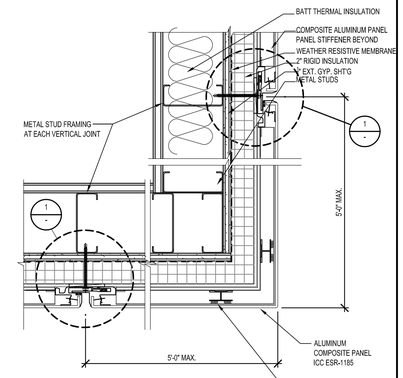

ALUM. COMPOSITE PANEL OUTSIDE CORNER 5

SCALE: 3" = 1'-0"

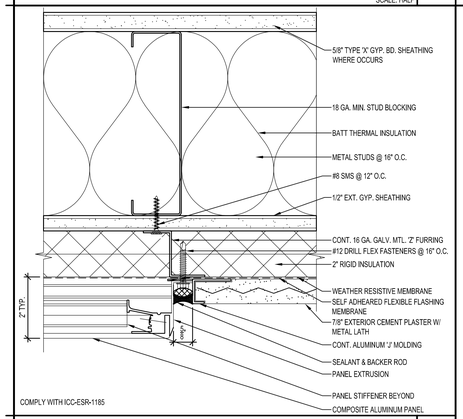

COMPLY WITH ICC-ESR-1185

ALUM. COMPOSITE PANEL VERTICAL JOINT 6

SCALE: HALF

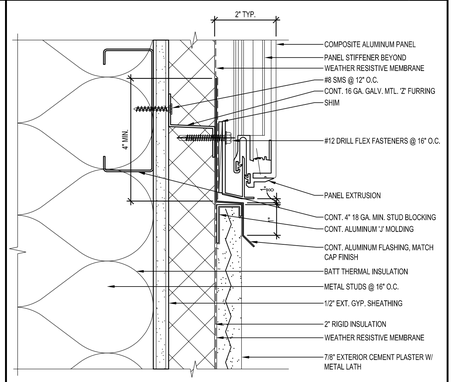

ALUM. COMPOSITE PANEL HORIZONTAL JOINT 11

SCALE: HALF

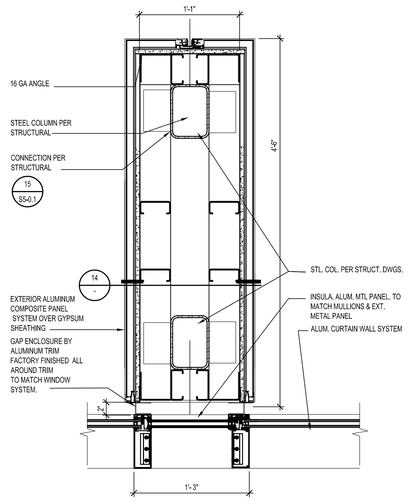

EXTERIOR ENTRY PILAR PLAN VIEW 12

SCALE: 1 1/2" = 1'-0"

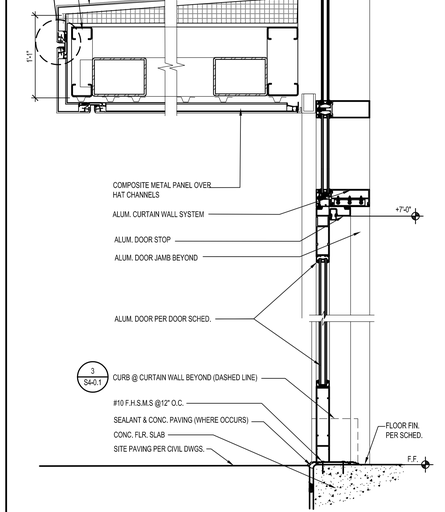

EXTERIOR ENTRY SECTION THROUGH DOOR 13

SCALE: 1 1/2" = 1'-0"

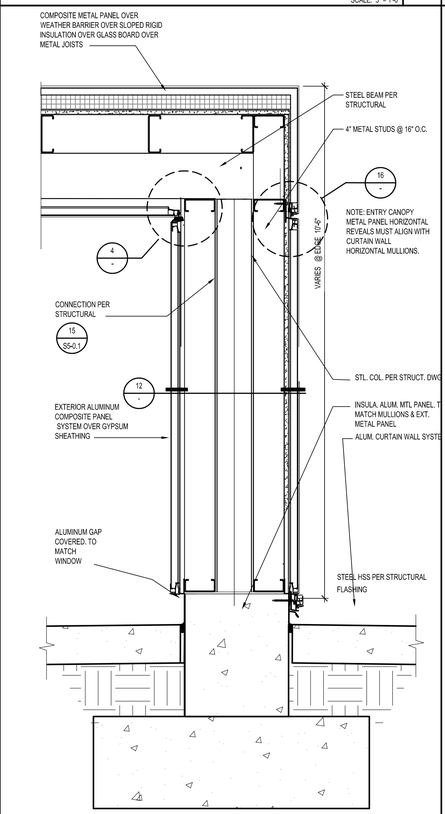

EXTERIOR WALL ENTRY SECTION 14

SCALE: 1 1/2" = 1'-0"

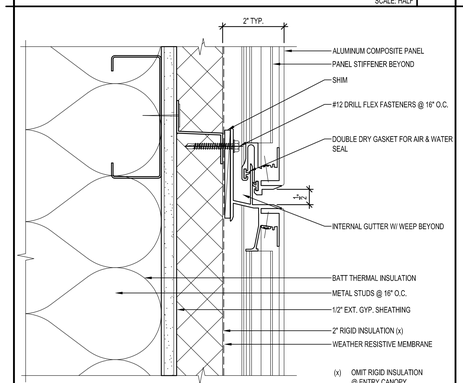

ALUM. COMPOSITE PANEL HORIZONTAL JOINT 16

SCALE: HALF

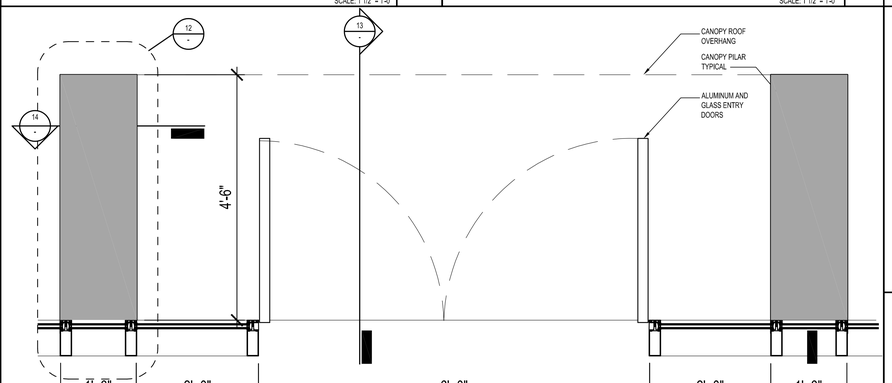

NORTH ENTRY CANOPY FEATURE 18

SCALE: 1" = 1'-0"

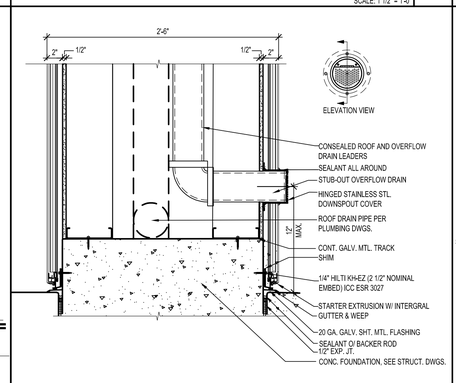

EXT WALL @ NORTH STAIR 19

SCALE: 1-1/2" = 1'-0"

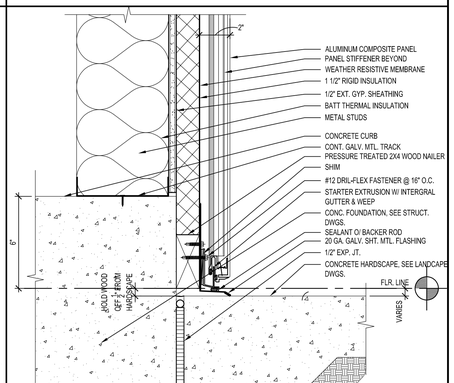

ALUM. COMPOSITE PANEL BASE 20

SCALE: 3" = 1'-0"

IDENTIFICATION STAMP
DIV. OF THE STATE ARCHITECT
APP. 03-119458 INC:
REVIEWED FOR
SS ☑ FLS ☑ ACS ☑
DATE:05/23/2019

DIVISION OF STATE ARCHITECT
355 South Grand Avenue, Suite 2100
Los Angeles, California. 90012
ph: (213) 897-3995 Fax: (213) 897-3159
agency

tBP
architecture
planning
interiors

LICENSED ARCHITECT
CHRISTINE PAIGE ROSS
No. C25409
STATE OF CALIFORNIA

tBP/Architecture
4611 Teller Avenue
Newport Beach, CA 92660
ph: 949.673.0300 fx: 949.732.3895
architect

consultant

COMPTON COLLEGE
INSTRUCTIONAL BUILDING No. 2

COMPTON COMMUNITY COLLEGE DISTRICT
1111 E. ARTESIA BLVD. COMPTON, CA.

owner

tBP project number : 20998.00
file name: DI-0302.dwg
drawn by: checked by:
date: 04/08/2019

Rev:	date:	description:

THIS DRAWING AND THE DESIGN, EXPRESSIONS, IDEAS AND SYSTEM INFORMATION CONTAINED HEREIN CONSTITUTE UNPUBLISHED WORK OF tBP/ARCHITECTURE AND SHALL REMAIN THE PROPERTY OF tBP/ARCHITECTURE IN PERPETUITY. NO PART THEREOF SHALL BE REPRODUCED, DISCLOSED, DISSEMINATED, SOLD, PUBLISHED OR OTHERWISE USED IN ANY WAY WITHOUT THE ADVANCED EXPRESS WRITTEN CONSENT OF tBP/ARCHITECTURE.

drawing title:
EXTERIOR WALL ALUM. COMPOSITE PANELS

drawing no.:
3.02
drawing of

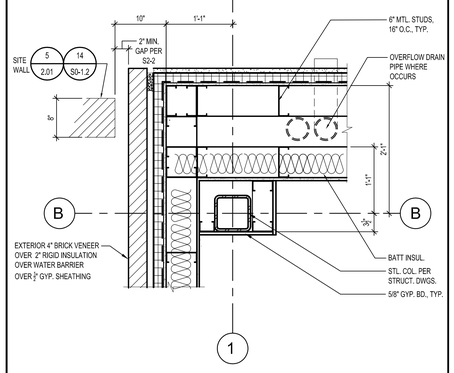

COLUMN - GRIDS 1 / B (1ST FLR.) SCALE: 1" = 1'-0" 1

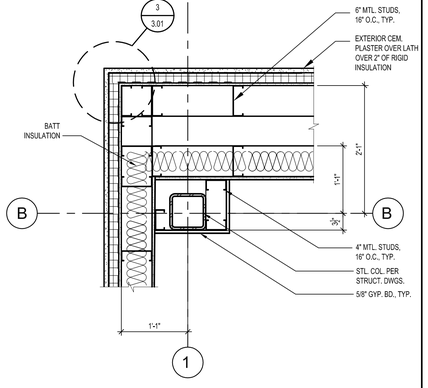

COLUMN - GRIDS 1 / B (2ND. FLR.) SCALE: 1" = 1'-0" 2

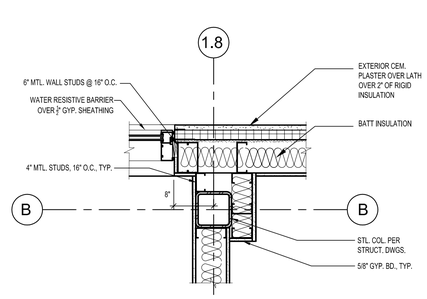

COLUMN - GRIDS 1.8 / B (1ST. FLR.) SCALE: 1" = 1'-0" 3

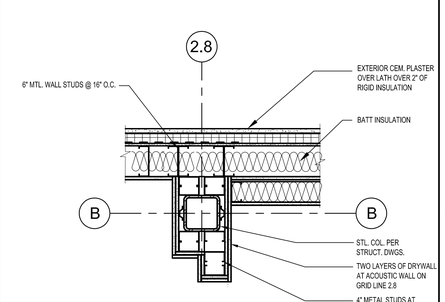

COLUMN - GRIDS 2.8/ B (1ST. FLR.) SCALE: 1" = 1'-0" 4

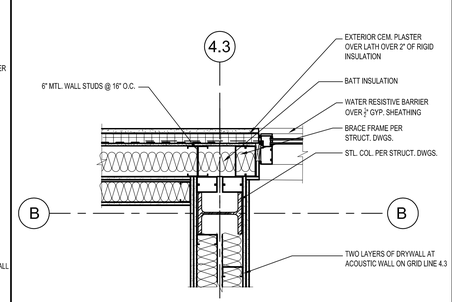

COLUMN - GRIDS 4.3 / B (1ST FLR.) SCALE: 1" = 1'-0" 5

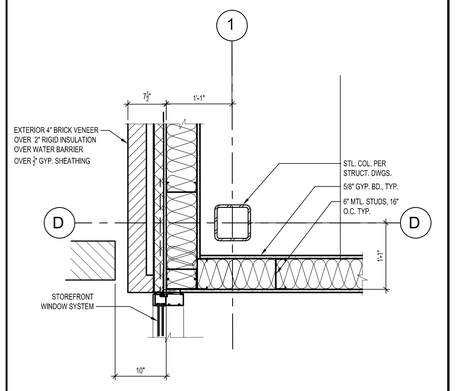

COLUMN - GRIDS 1 / D (1st. FLR.) SCALE: 1" = 1'-0" 6

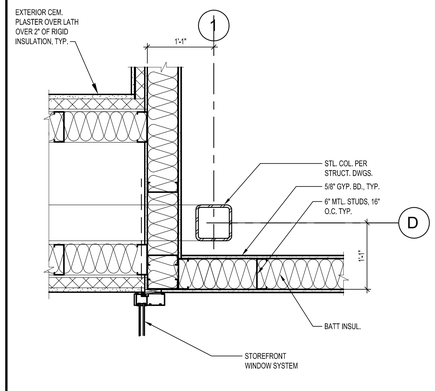

COLUMN - GRIDS 1 / D (2nd. FLR.) SCALE: 1" = 1'-0" 7

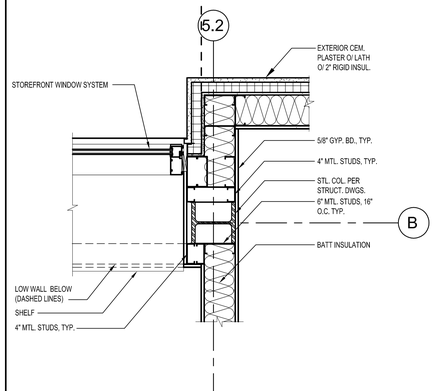

COLUMN - GRIDS 5.2 / B (1ST FLR.) SCALE: 1" = 1'-0" 8

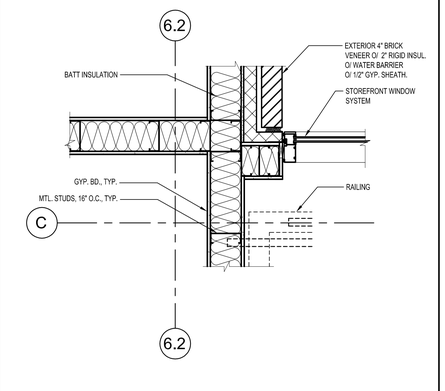

COLUMN - GRIDS 6.2 / C (1st & 2nd FLR.) SCALE: 1" = 1'-0" 9

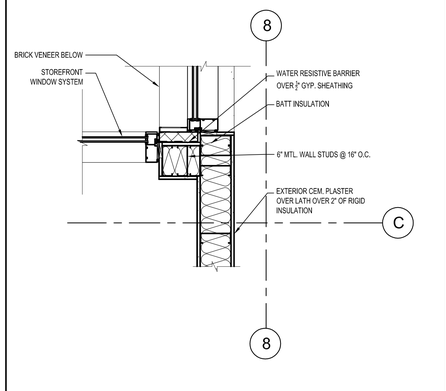

COLUMN - GRIDS 8 / C (2nd FLR.) SCALE: 1" = 1'-0" 10

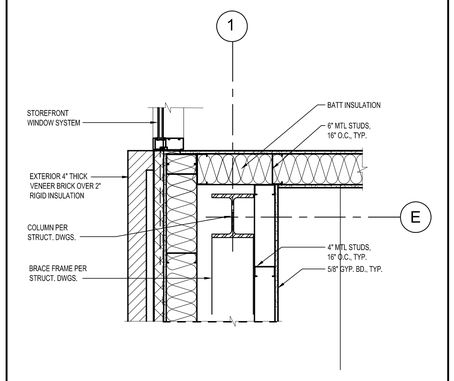

COLUMN - GRIDS 1 / E (1ST FLR.) SCALE: 1" = 1'-0" 11

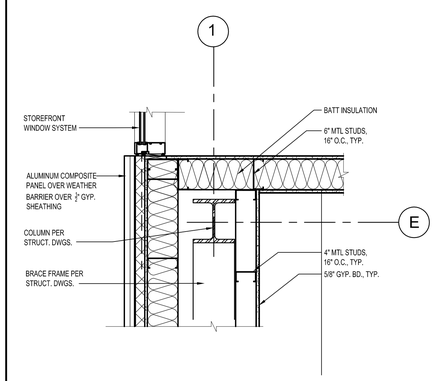

COLUMN - GRIDS 1 / E (2 nd. FLR.) SCALE: 1" = 1'-0" 12

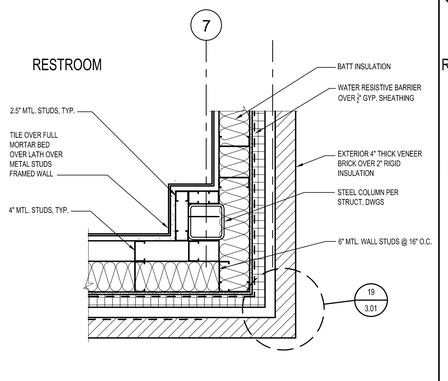

CO. - GRID 7 @ RESTROOMS (1st. FLR .) SCALE: 1" = 1'-0" 14

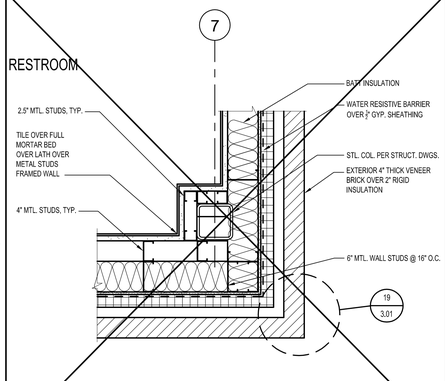

CO. - GRID 7 @ RESTROOMS (2nd. FLR .) SCALE: 1" = 1'-0" 15

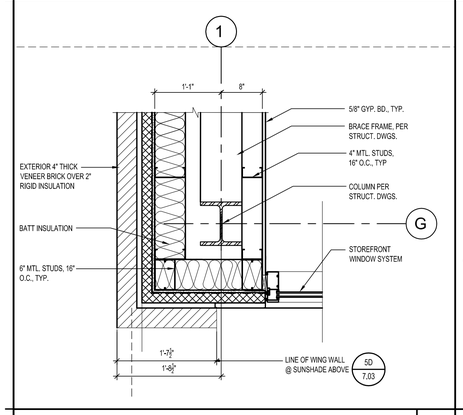

COLUMN - GRIDS 1 / G (1ST FLR.) SCALE: 1" = 1'-0" 16

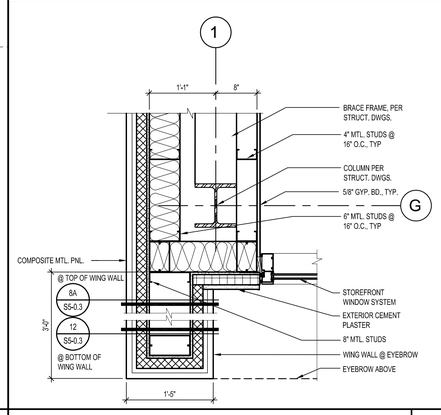

COLUMN - GRIDS 1 / G (2ND FLR.) SCALE: 1" = 1'-0" 17

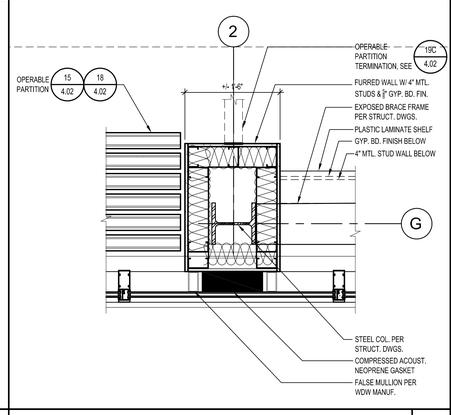

COLUMN - GRIDS 2 / G (1ST FLR.) SCALE: 1" = 1'-0" 18

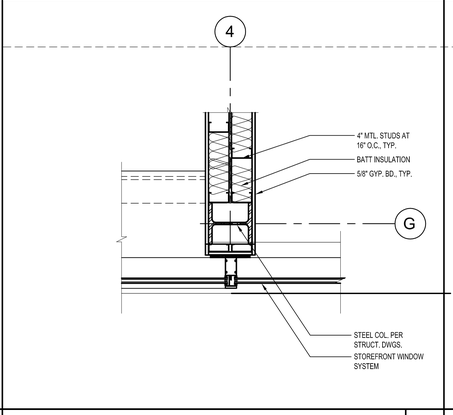

COLUMN - GRIDS 4 / G (1ST FLR.) SCALE: 1" = 1'-0" 19

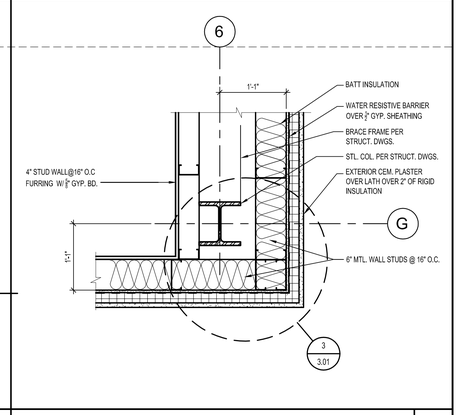

COLUMN - GRIDS 6 / G (1ST & 2ND. FLOOR) SCALE: 1" = 1'-0" 20

IDENTIFICATION STAMP
DIV. OF THE STATE ARCHITECT
APP. 03-119458 INC:
REVIEWED FOR
SS ☑ FLS ☑ ACS ☑
DATE:05/23/2019

DIVISION OF STATE ARCHITECT
355 South Grand Avenue, Suite 2100
Los Angeles, California. 90012
ph: (213) 897-3995 Fax: (213) 897-3159
agency

tBP
architecture
planning
interiors

LICENSED ARCHITECT
JOSEPH P. WOOD
No. C25509
REN. 7-31-21
STATE OF CALIFORNIA

tBP/Architecture
4611 Teller Avenue
Newport Beach, CA 92660
ph: 949.673.0300 fx: 949.732.3895

architect

consultant

COMPTON COLLEGE
INSTRUCTIONAL BUILDING No. 2
COMPTON COMMUNITY COLLEGE DISTRICT
1111 E. ARTESIA BLVD. COMPTON, CA.
owner

tBP project number : 20998.00
file name: DI-0301.dwg
drawn by: checked by:
date: 04/08/2019

Rev: date: description:

THE DRAWING AND THE DESIGNS, CONCEPTIONS, IDEAS AND OTHER INFORMATION CONTAINED HEREIN CONSTITUTE UNPUBLISHED WORK OF tBP/ARCHITECTURE AND SHALL REMAIN THE PROPERTY OF tBP/ ARCHITECTURE IN PERPETUITY. NO PART THEREOF SHALL BE REPRODUCED, DISCLOSED, DISTRIBUTED, SOLD, PUBLISHED OR OTHERWISE USED IN ANY WAY WITHOUT THE ADVANCED EXPRESS WRITTEN CONSENT OF tBP/ARCHITECTURE.

drawing title:
COLUMN DETAILS

drawing no.:
3.20
drawing of

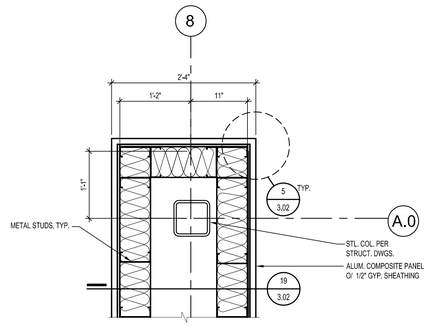

COLUMN - GRIDS 8 / A.0 (1st. / 2nd. FLRS.) SCALE: 1" = 1'-0" 4

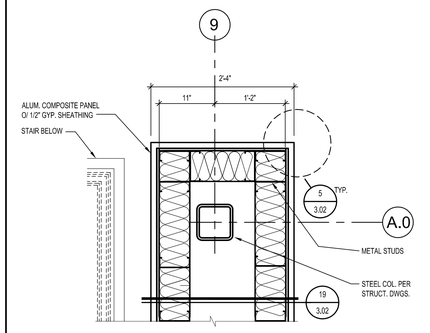

COLUMN - GRIDS 9 / A.0 (1st. / 2nd. FLRS.) SCALE: 1" = 1'-0" 5

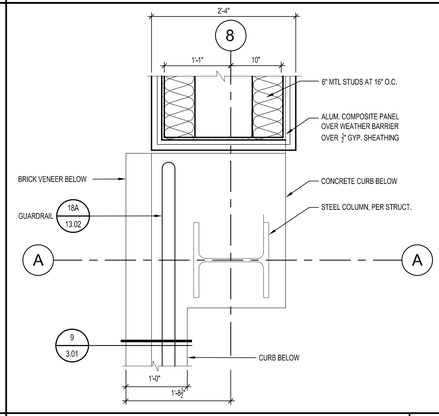

COLUMN - GRIDS 8 / A (2ND FLR. DECK) SCALE: 1" = 1'-0" 7

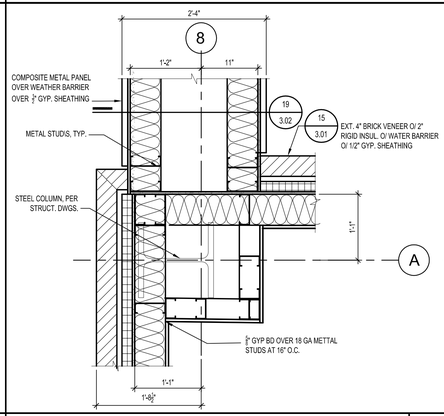

COLUMN - GRIDS 8 / A (1ST FLR.) SCALE: 1" = 1'-0" 8

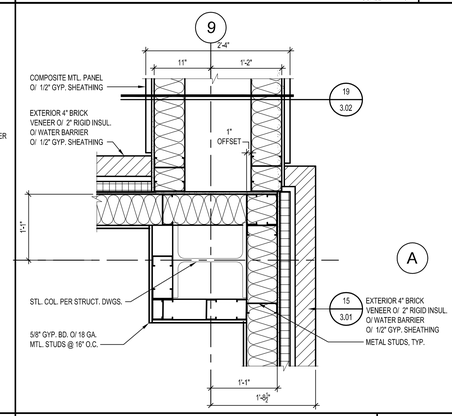

COLUMN - GRIDS 9 / A (1ST FLR.) SCALE: 1" = 1'-0" 9

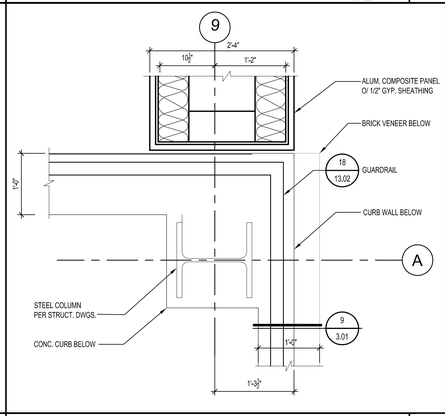

COLUMN - GRIDS 9 / A (2nd.FLR. DECK) SCALE: 1" = 1'-0" 10

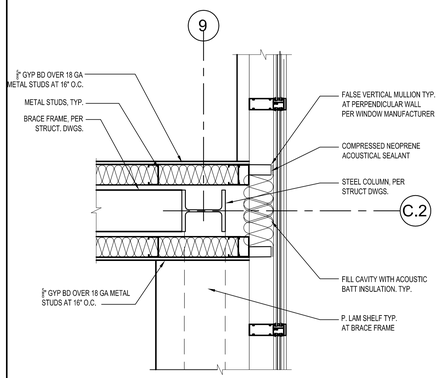

COLUMN - GRIDS 9 / C.2 (2ND FLR.) SCALE: 1" = 1'-0" 13

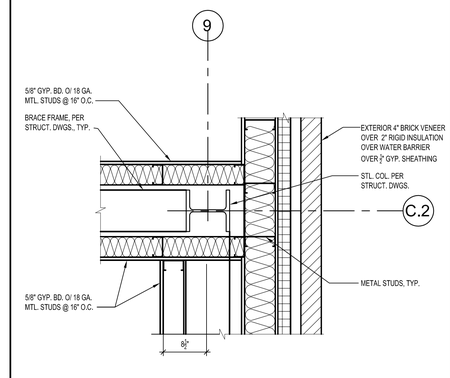

COLUMN - GRIDS 9 / C.2 (1ST FLR.) SCALE: 1" = 1'-0" 14

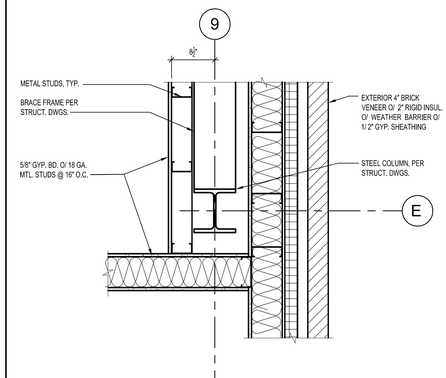

COLUMN - GRID 9 / E (1ST FLR.) SCALE: 1" = 1'-0" 15

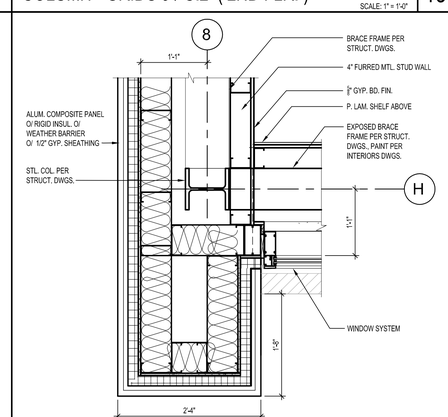

COLUMN - GRIDS 8 / H (2nd. FLR.) SCALE: 1" = 1'-0" 18

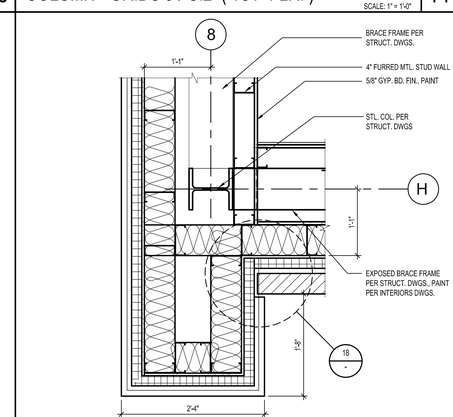

COLUMN - GRIDS 8 / H (1ST FLR.) SCALE: 1" = 1'-0" 19

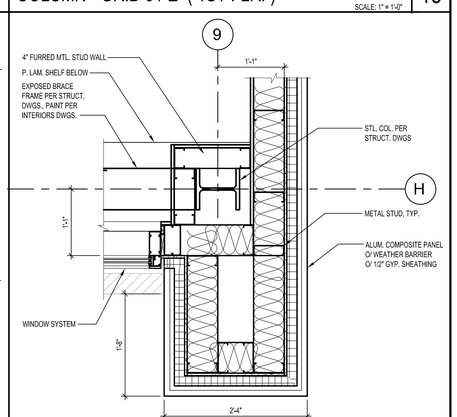

COLUMN - GRIDS 9 / H (2nd. FLR.) SCALE: 1" = 1'-0" 20

IDENTIFICATION STAMP
DIV. OF THE STATE ARCHITECT
APP. 03-119458 INC:
REVIEWED FOR
SS ☑ FLS ☑ ACS ☑
DATE:05/23/2019

DIVISION OF STATE ARCHITECT
355 South Grand Avenue, Suite 2100
Los Angeles, California. 90012
ph: (213) 897-3995 Fax: (213) 897-3159
agency

tBP architecture planning interiors

LICENSED ARCHITECT
ROBERT PETER WEISS
No. C25509
REN. 7-31-19
STATE OF CALIFORNIA

tBP/Architecture
4611 Teller Avenue
Newport Beach, CA 92660
ph: 949.673.0300 fx: 949.732.3895
architect

consultant

COMPTON COLLEGE
INSTRUCTIONAL BUILDING No. 2

COMPTON COMMUNITY COLLEGE DISTRICT
1111 E. ARTESIA BLVD. COMPTON, CA.

owner

tBP project number : 20998.00
file name: DI-03301.dwg
drawn by: checked by:
date: 04/08/2019

Rev:	date:	description:

THIS DRAWING AND THE DESIGNS, CONCEPTIONS, IDEAS AND OTHER INFORMATION CONTAINED HEREIN CONSTITUTE UNPUBLISHED WORK OF tBP/ARCHITECTURE AND SHALL REMAIN THE PROPERTY OF tBP/ ARCHITECTURE IN PERPETUITY. NO PART THEREOF SHALL BE REPRODUCED, DISCLOSED, DISTRIBUTED, SOLD, PUBLISHED OR OTHERWISE USED IN ANY WAY WITHOUT THE EXPRESS WRITTEN CONSENT OF tBP/ARCHITECTURE.

drawing title:
EXTERIOR WALL
COLUMN DETAILS

drawing no.:
3.21
drawing of

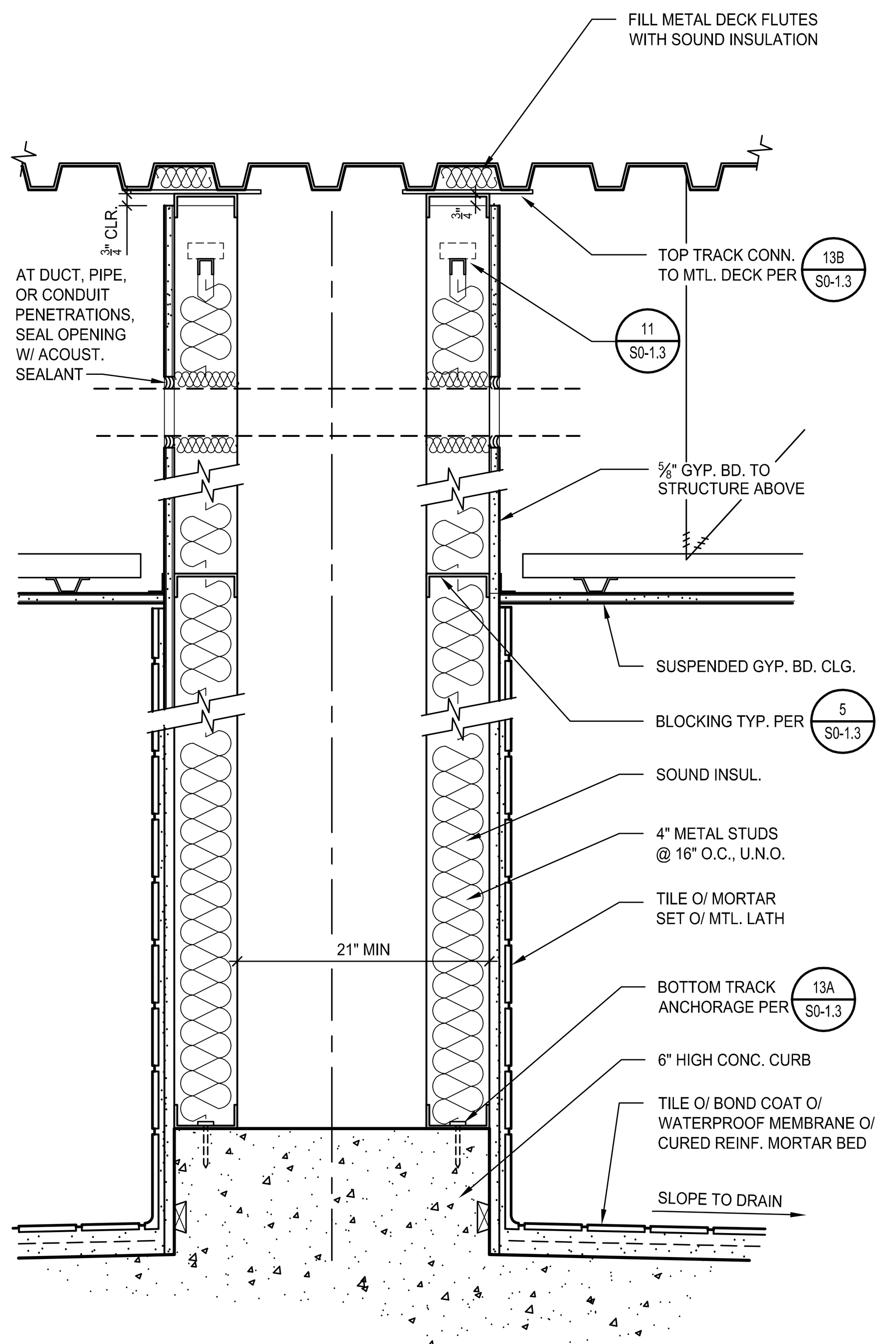

WALL TYPE ⟨E-#⟩ # INDICATES WIDTH OF METAL STUDS	U.L. # : NONE FIRE RATING : NONE STC :

PLUMBING WALL
SCALE: 1-1/2" = 1'-0" 6

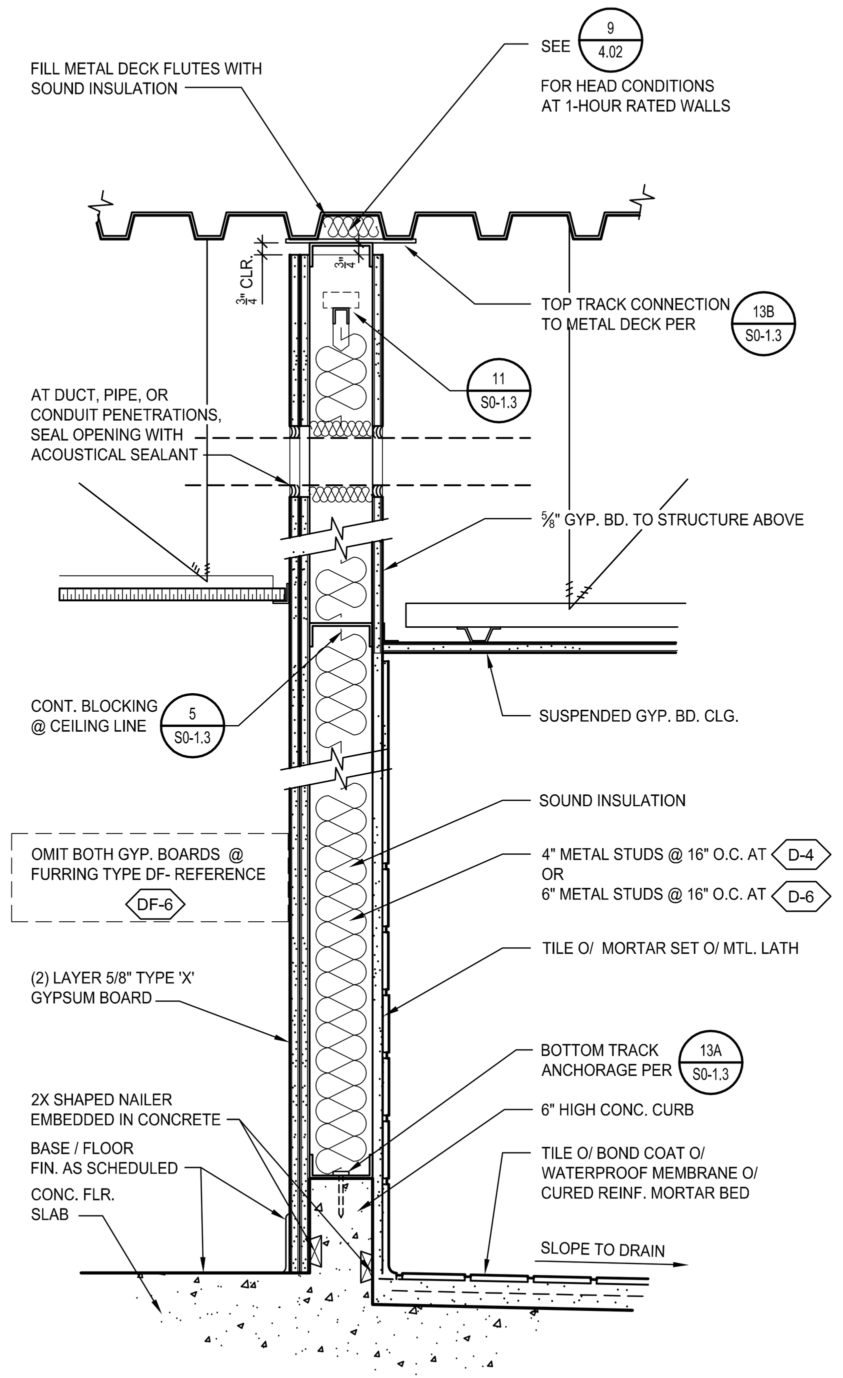

ALL PENETRATIONS THROUGH THIS WALL MUST BE SEALED W/ FIRE SEALANT PER DETAILS 1/4.03 2/4.03 6/4.03 7/4.03 8/4.03

WALL TYPE ⟨D-#⟩ # INDICATES WIDTH OF METAL STUDS	U.L. # : NONE FIRE RATING : NONE STC :

TOILET ROOM WALL
SCALE: 1-1/2" = 1'-0" 7

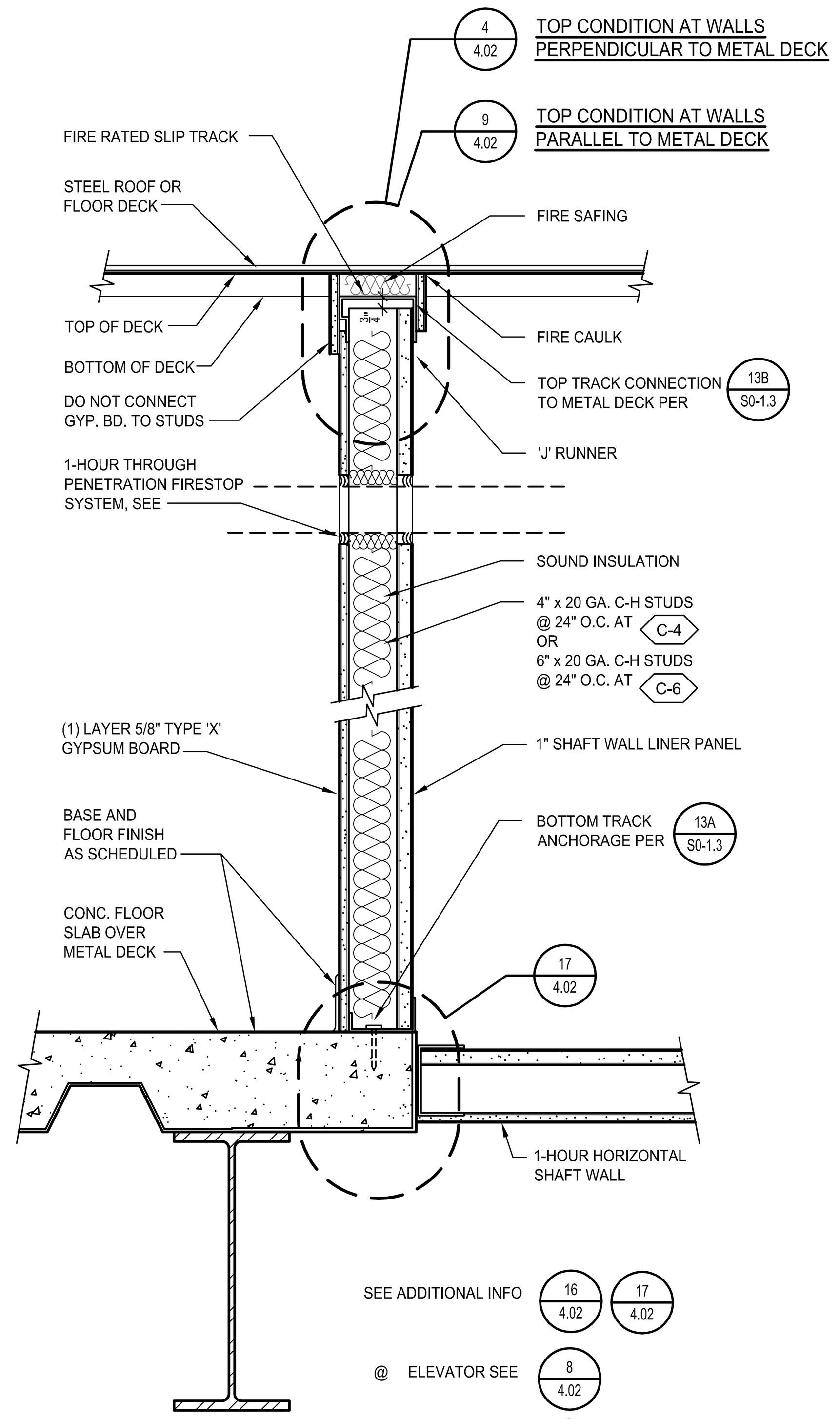

ALL PENETRATIONS THROUGH THIS WALL MUST BE SEALED WITH FIRE SEALANT SEE DETAILS 3/4.02

WALL TYPE ⟨C-#⟩ # INDICATES WIDTH OF METAL STUDS	U.L. # : U469 FIRE RATING : 1-HOUR STC :

1-HOUR SHAFT WALL
SCALE: 1-1/2" = 1'-0" 8

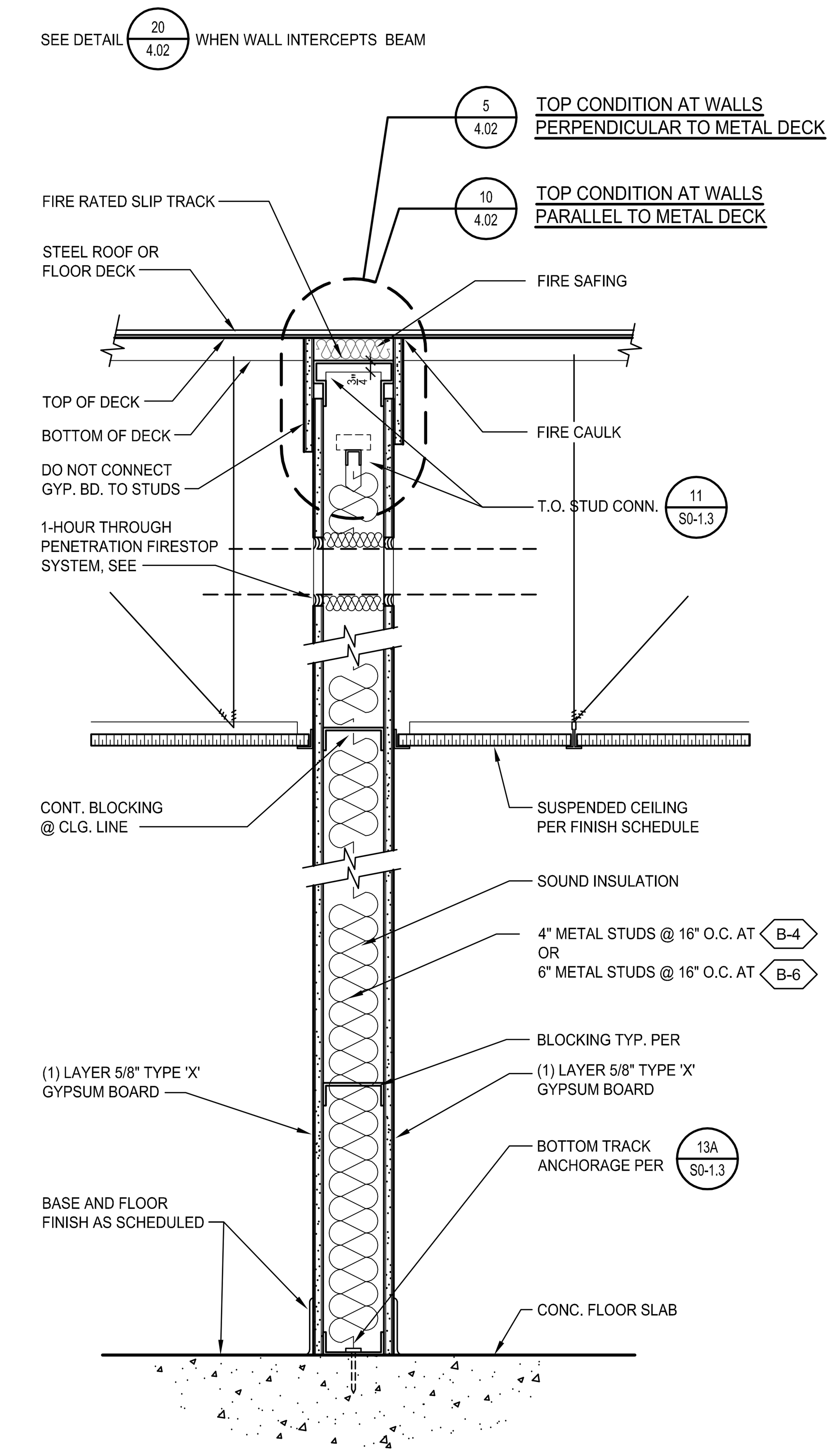

ALL PENETRATIONS THROUGH THIS WALL MUST BE SEALED WITH FIRE SEALANT SEE DETAILS 3/4.02

WALL TYPE ⟨B-#⟩ # INDICATES WIDTH OF METAL STUDS	U.L. # : U465 FIRE RATING : 1-HOUR STC :

1-HOUR RATED PARTITION
SCALE: 1-1/2" = 1'-0" 9

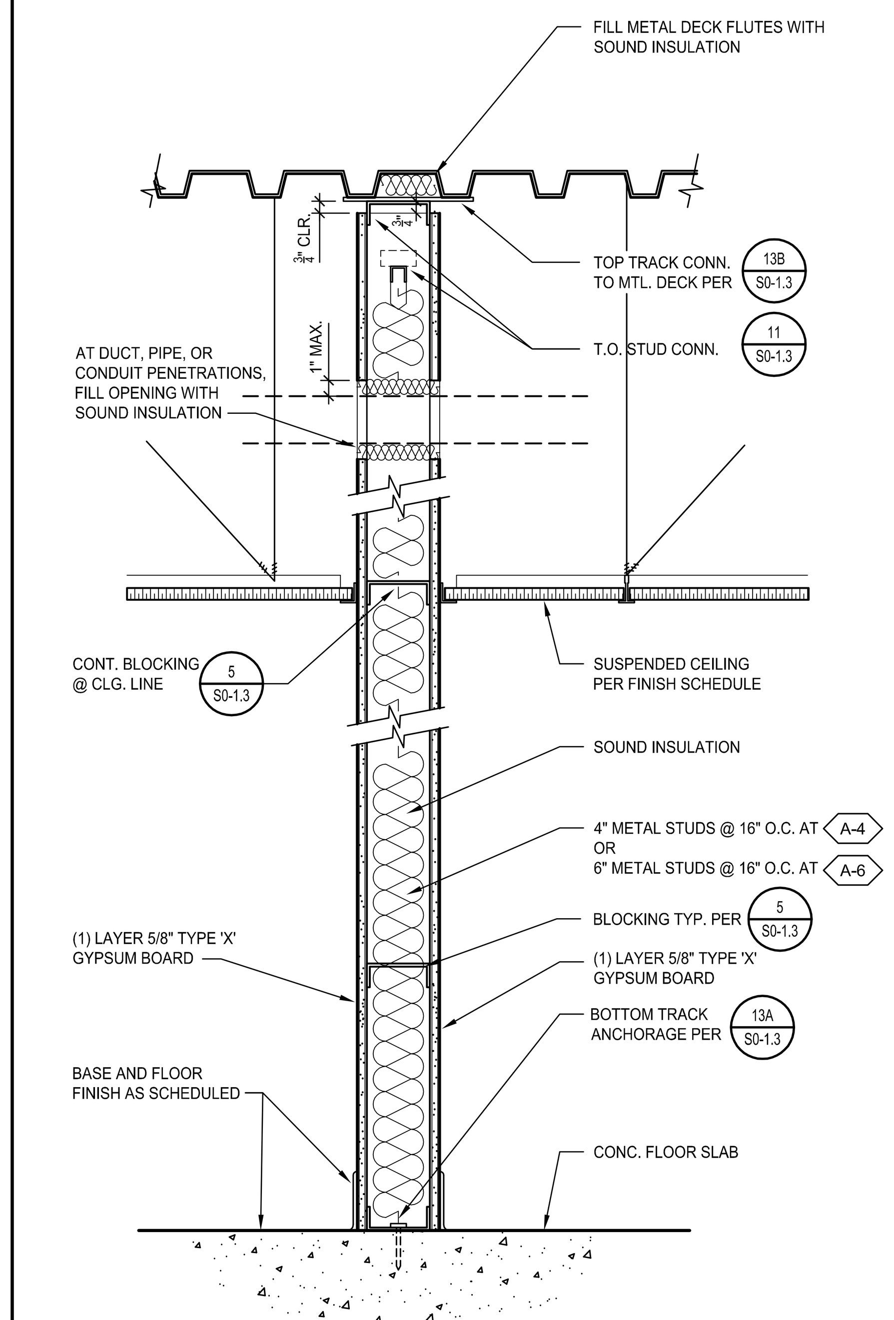

ALL PENETRATIONS THROUGH THIS WALL MUST BE SEALED WITH ACOUSTIC SEALANT SEE DETAILS 1/4.03 2/4.03 6/4.03 7/4.03 8/4.03

WALL TYPE ⟨A-#⟩ # INDICATES WIDTH OF METAL STUDS	U.L. # : NONE FIRE RATING : NONE STC :

TYPICAL METAL STUD PARTITION
SCALE: 1-1/2" = 1'-0" 10

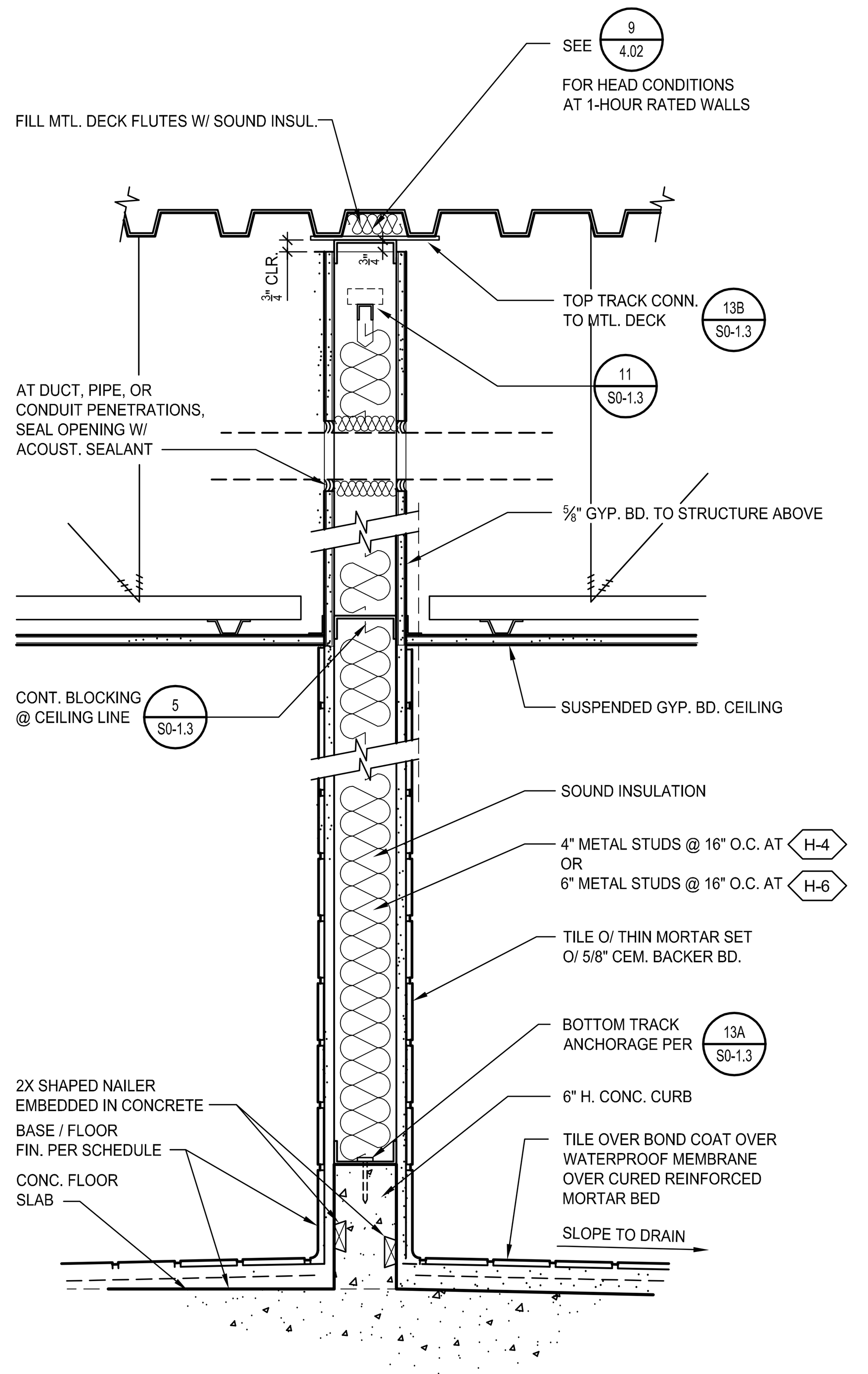

WALL TYPE ⟨H-#⟩	U.L. # : NONE FIRE RATING : NONE STC :

TOILET ROOM WALL
SCALE: 1-1/2" = 1'-0" 16

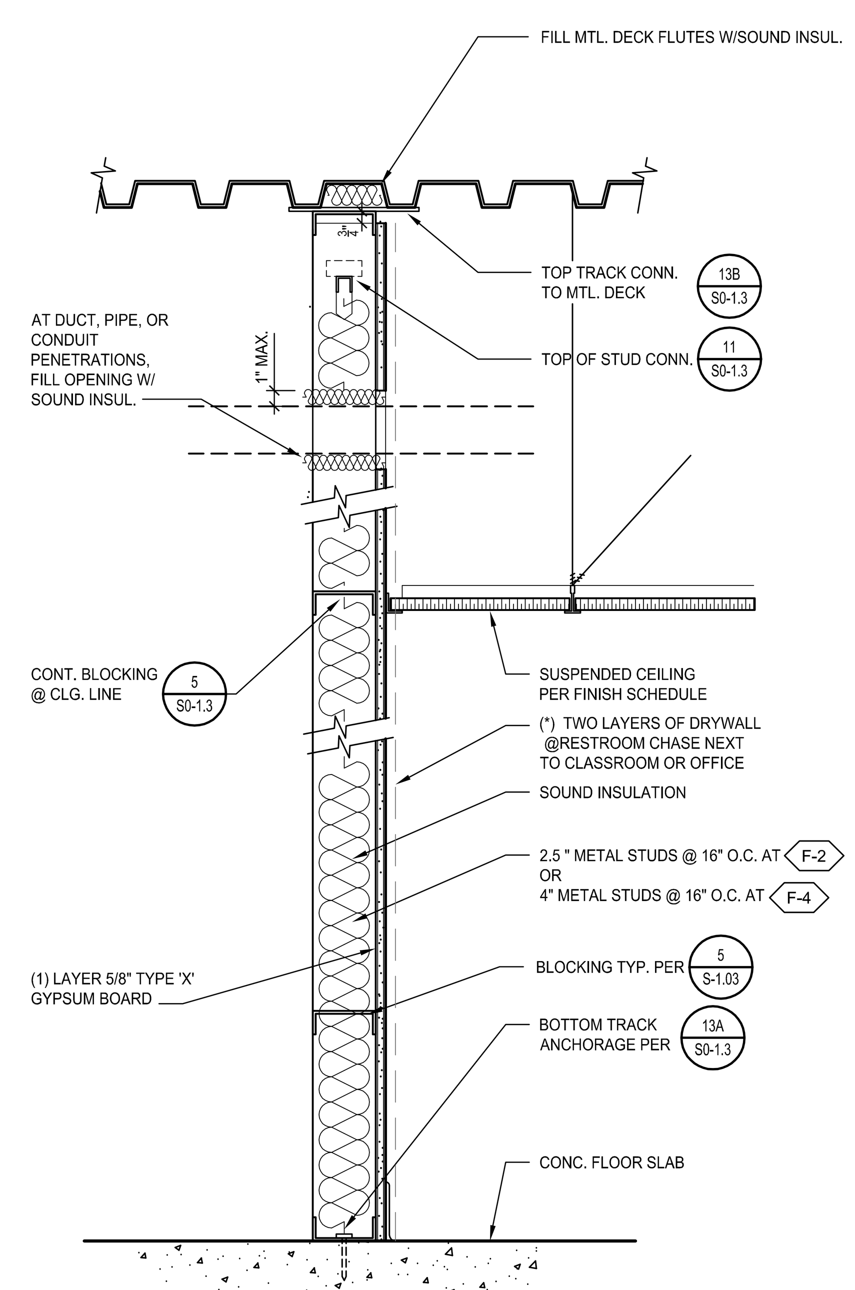

⟨F2-#⟩ W/ TILE ON ONE SIDE WALL TYPE ⟨F-# *⟩ # INDICATES WIDTH OF METAL STUDS (*) SEE NOTE ON DETAIL	U.L. # : NONE FIRE RATING : NONE STC :

TYPICAL METAL STUD FURRING PARTITION
SCALE: 1-1/2" = 1'-0" 17

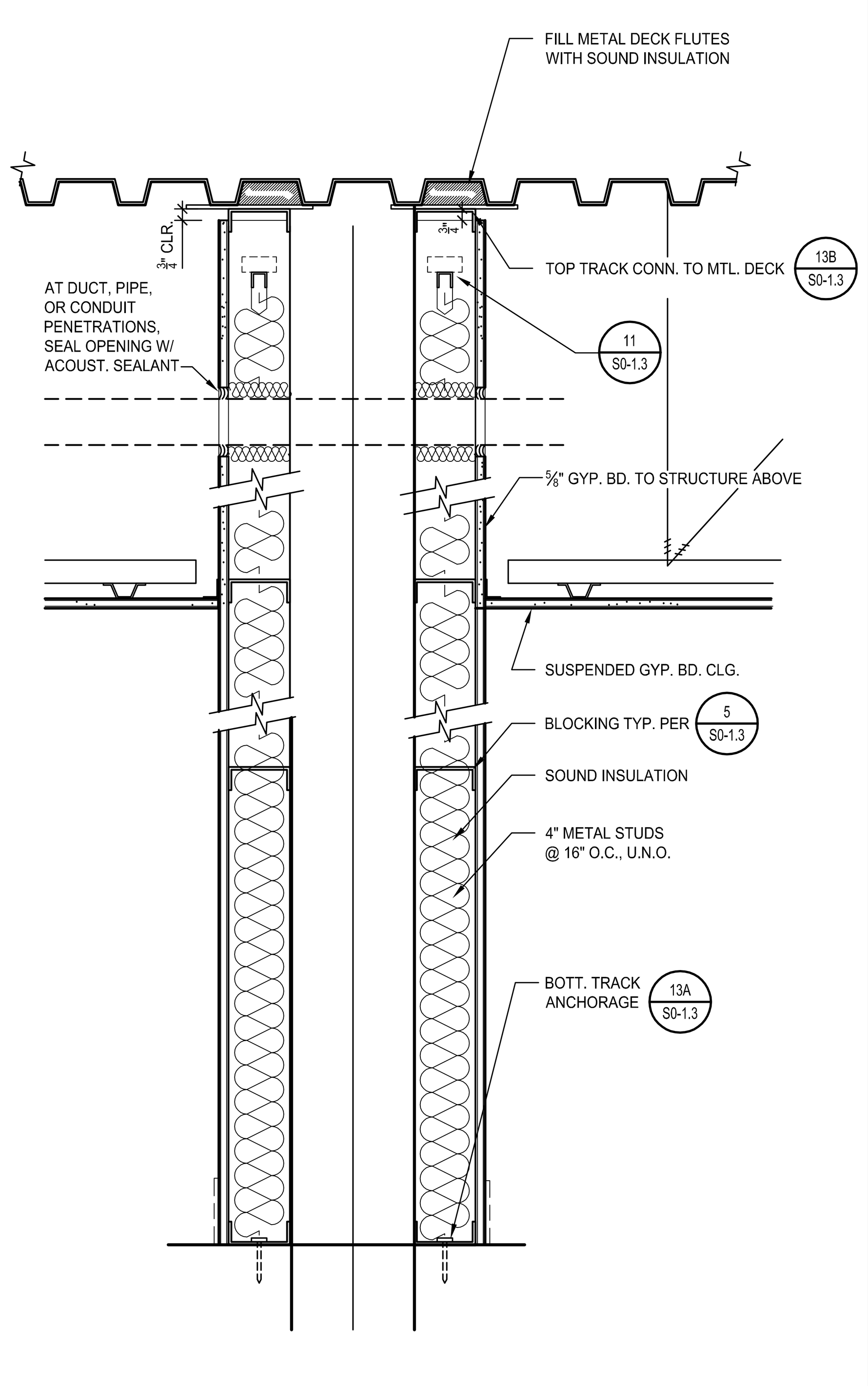

DOUBLE ⟨2F-#⟩ # INDICATES WIDTH OF METAL STUDS	U.L. # : NONE FIRE RATING : NONE STC :

DOUBLE FURRING WALL AT BRACE FRAME
SCALE: 1-1/2" = 1'-0" 19

Base Layer: 5/8" ToughRock® Fireguard X® or DensArmor Plus® Fireguard® interior panels applied vertically or horizontally to one side of a double row of 3-1/2" , 25-gauge steel studs 16" o.c. and not less than 1" apart with 1" Type S drywall screws 16" o.c. Face Layer: 5/8" toughRock Fireguard X or DensArmor Plus Fireguard interior panels applied vertically or horizontally to same side of studs with 1-5/8" Type S drywall screws 12" o.c. Face layer vertical joints offset one stud cavity from base layer vertical joints. Face layer horizontal joints offset not less than 6" from base layer horizontal joints. Vertical joints centered over studs and staggered one stud cavity on opposite sides of studs. Horizontal joints need not be backed by framing. Horizontal joints on opposite sides need not be staggered. Lateral bracing on both sides of the wall not less than 5 feet on center vertically. Sound tested using double row 3-5/8" 18-gauge steel studs and 3-1/2" glass fiber insulation, 0.5 pcf, on both sides in cavity.
Fire Test Reference: UL W407, cUL W407, GA WP 5240
Sound Test Reference: RAL TL09-332

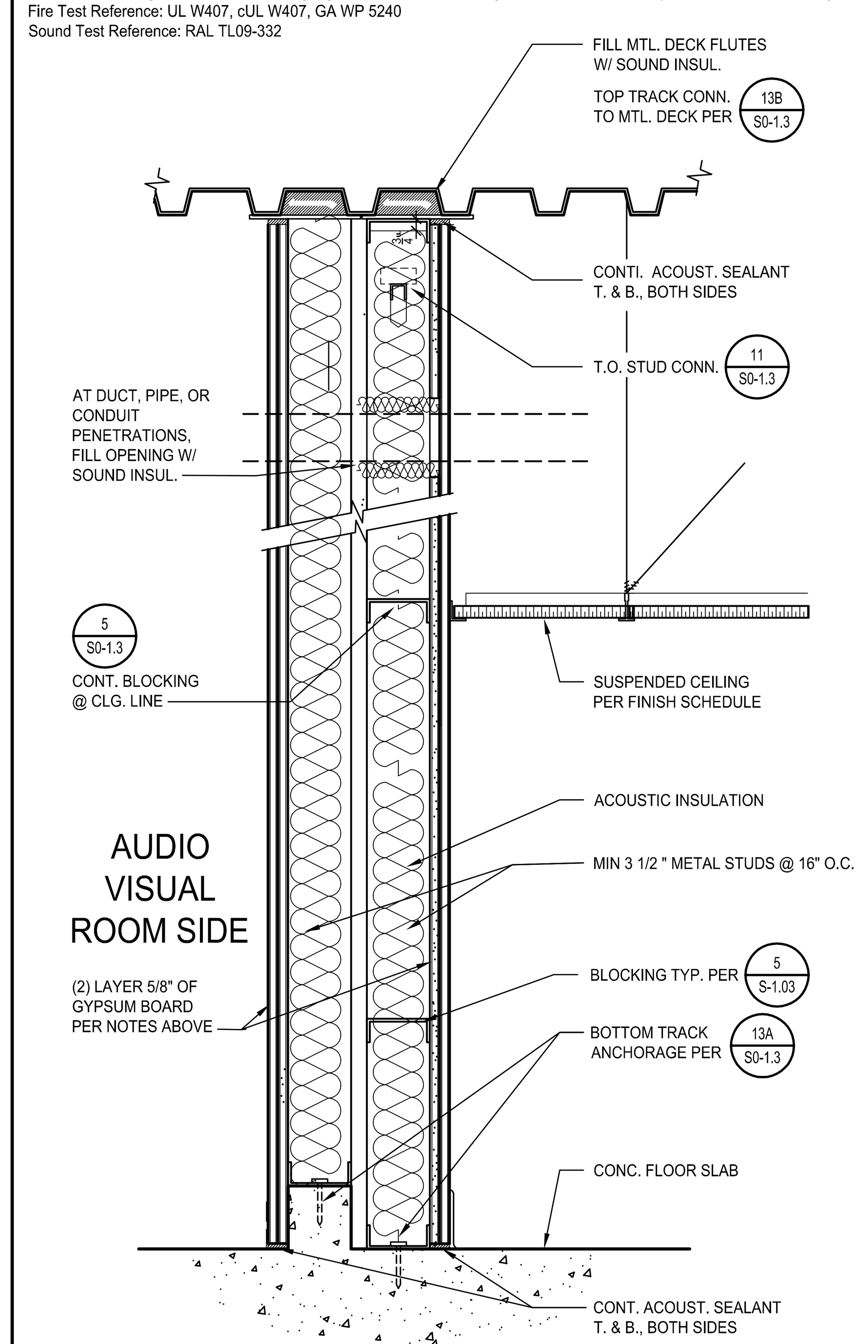

ALL PENETRATIONS THROUGH THIS WALL MUST BE SEALED WITH ACOUSTIC SEALANT SEE DETAILS 1/4.03 2/4.03 6/4.03 7/4.03 8/4.03

WALL TYPE ⟨AC-#⟩ # INDICATES WIDTH OF METAL STUDS	U.L. # : NOT REQUIRED FIRE RATING : 2 HOURS STC : 65-69

ACOUSTIC PARTITION 65 TO 69 STC
SCALE: 1-1/2" = 1'-0" 20

IDENTIFICATION STAMP
DIV. OF THE STATE ARCHITECT
APP. 03-119458 INC:
REVIEWED FOR
SS ☑ FLS ☑ ACS ☑
DATE:05/23/2019

DIVISION OF STATE ARCHITECT
355 South Grand Avenue, Suite 2100
Los Angeles, California. 90012
ph: (213) 897-3995 Fax: (213) 897-3159
agency

tBP architecture planning interiors

LICENSED ARCHITECT GARY PAIGE MOON NO. C25409 REN. 7-31-19 STATE OF CALIFORNIA

tBP/Architecture
4611 Teller Avenue
Newport Beach, CA 92660
ph: 949.673.0300 fx: 949.732.3895
architect

consultant

COMPTON COLLEGE
INSTRUCTIONAL BUILDING No. 2
COMPTON COMMUNITY COLLEGE DISTRICT
1111 E. ARTESIA BLVD. COMPTON, CA.
owner

tBP project number : 20998.00
file name: 0402-MD_metal_types.dwg
drawn by: checked by:
date: 04/08/2019
Rev: date: description:

THIS DRAWING AND THE DESIGNS, DEPICTIONS, IDEAS AND OTHER INFORMATION CONTAINED HEREIN CONSTITUTE UNPUBLISHED WORK OF tBP/ARCHITECTURE AND SHALL REMAIN THE PROPERTY OF tBP/ARCHITECTURE IN PERPETUITY. NO PART THEREOF SHALL BE REPRODUCED, DISCLOSED, DISTRIBUTED, SOLD, PUBLISHED OR OTHERWISE USED IN ANY WAY WITHOUT THE ADVANCED EXPRESS WRITTEN CONSENT OF tBP/ARCHITECTURE.

drawing title:
METAL STUD PARTITION TYPES

drawing no.:
4.01
drawing of

THROUGH-PENETRATION FIRESTOP SYSTEM SCHEDULE

Firestop Systems Are Listed Using the Alpha-Alpha-Numeric identification System Published in UL's Fire Resistence Directory, Vol. 2

TYPE OF PENETRANT	CONSTRUCTION: FLOOR PENETRATION SYSTEMS (First Alpha Component = C or W) — Concrete Floors with a Minimum Thickness Less Than or Equal to 5 Inches	Concrete Floors with a Minimum Thickness Greater Than 5 Inches	Framed Floors	WALL PENETRATION SYSTEMS (First Alpha Component = C or W) — Concrete or Masonry Walls with a Minimum Thickness Less Than or Equal to 8 Inches	Concrete or Masonry Walls with a Minimum Thickness Greater Than 8 Inches	Framed Walls
NO PENETRATING ITEMS	C-AJ-0001-0999 OR F-A-0001-0999	C-BJ-0001-0999	X	C-AJ-0001-0999 OR C-BJ-0001-0999 OR W-J-0001-0999	X	W-L-0001-0999
METALLIC PIPE, CONDUIT, OR TUBING	C-AJ-1001-1999 OR F-A-1001-1999	C-BJ-1001-1999 OR C-BK-1001-1999 OR F-B-1001-1999	F-C-1001-1999	C-AJ-1001-1999 OR C-BJ-1001-1999 OR W-J-1001-1999	C-BK-1001-1999 OR W-K-1001-1999	W-L-1001-1999
NONMETALLIC PIPE, CONDUIT, OR TUBING	C-AJ-2001-2999 OR F-A-2001-2999	C-BJ-2001-2999 OR F-B-2001-2999	F-C-2001-2999	C-AJ-2001-2999 OR C-BJ-2001-2999 OR W-J-2001-2999	X	W-L-2001-2999
ELECTRICAL CABLES	C-AJ-3001-3999 OR F-A-3001-3999	C-BJ-3001-3999 OR F-B-3001-3999	F-C-3001-3999	C-AJ-3001-3999 OR C-BJ-3001-3999 OR W-J-3001-3999	X	W-L-3001-3999
CABLE TRAYS WITH ELECTRICAL CABLES	C-AJ-4001-4999 OR F-A-4001-4999	C-BJ-4001-4999	X	C-AJ-4001-4999 OR C-BJ-4001-4999 OR W-J-4001-4999	W-K-4001-4999	W-L-4001-4999
INSUALTED PIPES	C-AJ-5001-5999 OR F-A-5001-5999	C-BJ-5001-5999	F-C-5001-5999	C-AJ-5001-5999 OR W-J-5001-5999	X	W-L-5001-5999
MISC. ELECTRICAL PENETRANTS	C-AJ-6001-6999 OR F-A-6001-6999	X	X	C-AJ-6001-6999	X	W-L-6001-6999
MISC. MECHANICAL PENETRANTS	C-AJ-7001-7999	X	F-C-7001-7999	C-AJ-7001-7999 OR W-J-7001-7999	X	W-L-7001-7999
GROUPINGS OF PENETRATIONS	C-AJ-8001-8999 OR F-A-8001-8999	C-BJ-8001-8999	F-C-8001-8999	C-AJ-8001-8999 OR C-BJ-8001-8999 OR W-J-8001-8999	X	W-L-8001-8999

FOR EACH LOCATION WHERE A FIRE-RESISTANCE-RATED FLOOR OR WALL ASSEMBLY IS PENETRATED, PROVIDE A UL-LISTED THROUGH-PENETRATION FIRESTOP SYSTEM SELECTED FROM THE APPLICABLE UL NUMBER RANGE LISTED ABOVE THAT COMPLIES WITH SPECIFICATION SECTION 07841 'THROUGH-PENETRATION FIRESTOP SYSTEMS' AND IS SUITABLE FOR THE PENETRATION CONDITIONS INDICATED FOR THE PROJECT.

FIRESTOP SYSTEM SCHEDULE 7

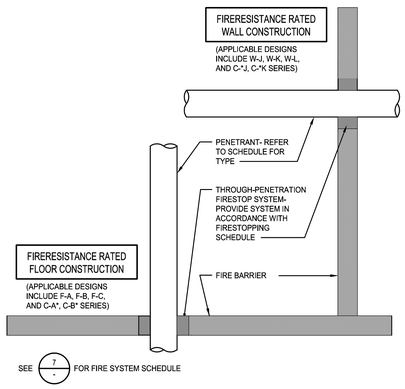

FIRESTOP SYSTEMS KEY 3

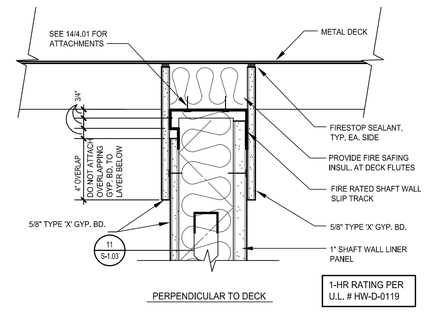

1-HR. SHAFTWALL TOP CONNECTION SCALE: 3" = 1'-0" 4

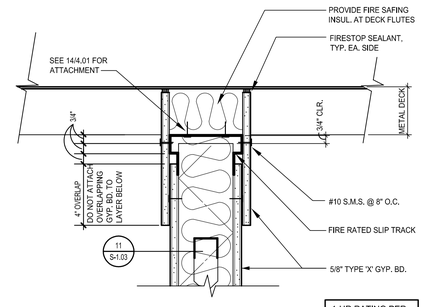

1-HR. PARTITION TOP CONNECTION SCALE: 3" = 1'-0" 5

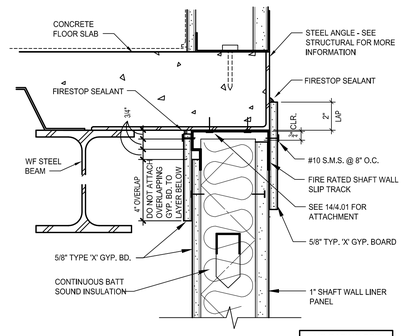

1-HR. RATED PARTITION @ ELEVATOR SHAFT SCALE: 3" = 1'-0" 8

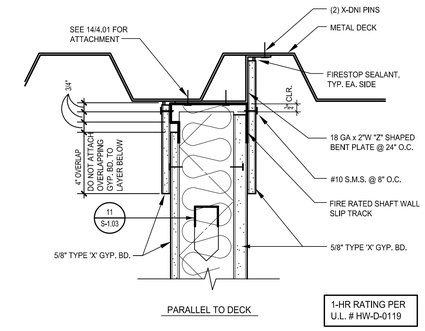

1-HR. SHAFTWALL TOP CONNECTION SCALE: 3" = 1'-0" 9

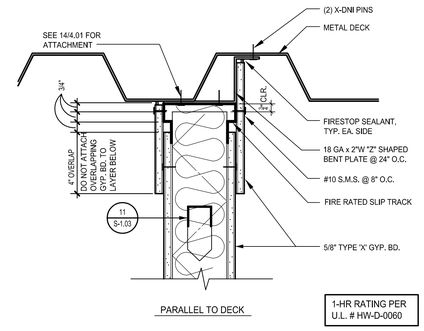

1-HR. PARTITION TOP CONNECTION SCALE: 3" = 1'-0" 10

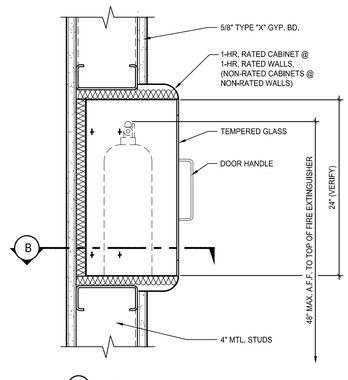

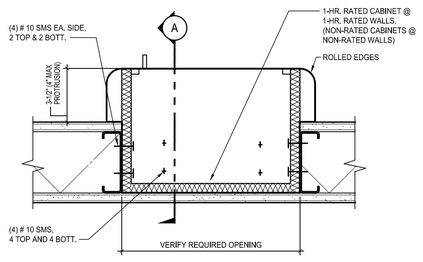

NOTE:
TRAVEL DISTANCE FROM ANYWHERE IN THE BUILDING TO FIRE EXTINGUISHERS SHALL NOT EXCEED 75' PER CFC 906, TABLE 2

FIRE EXTINGUISHER CABINET IN METAL STUD PARTITION ON CONCRETE WALLS F.E. WILL BE SURFACE MOUNTED SCALE: 3" = 1'-0" 12

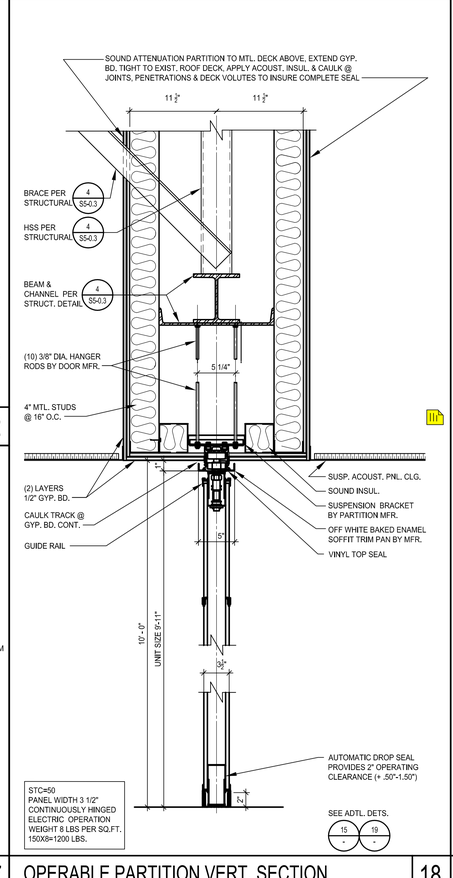

OPERABLE PARTITION VERT. SECTION SCALE: 1 1/2" = 1'-0" 18

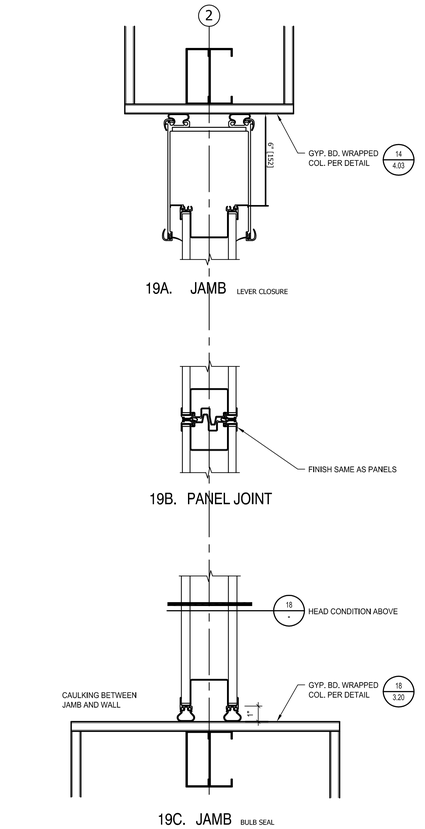

OPERABLE PARTITION JOINT & JAMB SCALE: 3" = 1'-0" 19

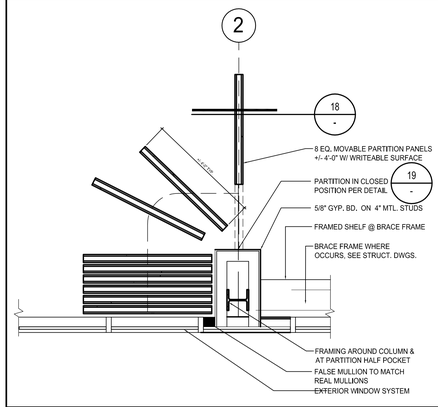

OPERABLE PARTITION OPEN POCKET SCALE: 1/2"= 1'-0" 15

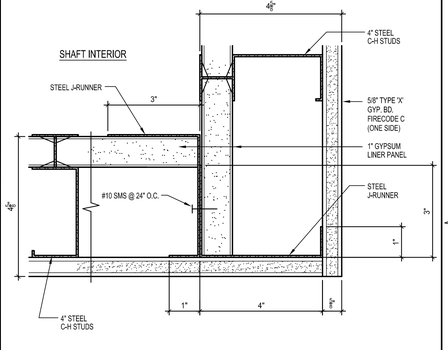

SHAFT WALL CORNER DETAIL SCALE: HALF 16

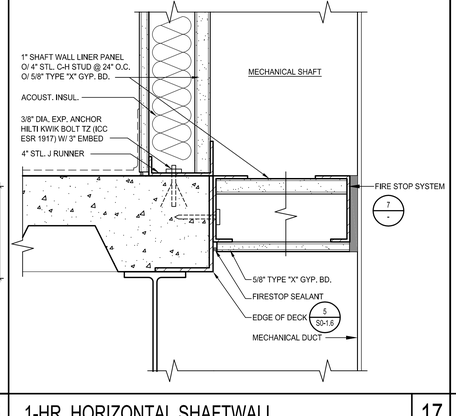

1-HR. HORIZONTAL SHAFTWALL SCALE: 3" = 1'-0" 17

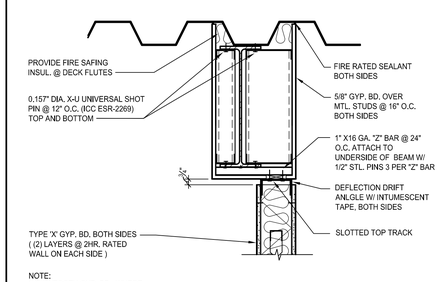

NOTE:
1. SAWTOOTH GYP. BD. WHERE STEEL DECK FLUTES RUN PERPENDICULAR TO PARTITION
2. SEE 4.01 SHT FOR ADDITIONAL INFORMATION

1-HR RATING PER U.L. # HW-D-0576

FIRE RATED WALL UNDER STEEL BEAM SCALE: 1-1/2" = 1'-0" 20

IDENTIFICATION STAMP
DIV. OF THE STATE ARCHITECT
APP. 03-119458 INC:
REVIEWED FOR
SS ☑ FLS ☑ ACS ☑
DATE:05/23/2019

DIVISION OF STATE ARCHITECT
355 South Grand Avenue, Suite 2100
Los Angeles, California. 90012
ph: (213) 897-3995 Fax: (213) 897-3159
agency

tBP
architecture
planning
interiors
LICENSED ARCHITECT
JAMES PAIGE HOOD
No. C25409
REN. 7-31-21
STATE OF CALIFORNIA
tBP/Architecture
4611 Teller Avenue
Newport Beach, CA 92660
ph: 949.673.0300 fx: 949.732.3895
architect
consultant

COMPTON COLLEGE
INSTRUCTIONAL BUILDING No. 2
COMPTON COMMUNITY COLLEGE DISTRICT
1111 E. ARTESIA BLVD. COMPTON, CA.
owner

tBP project number : 20998.00
file name: 0402-MD_mtl_firestop.dwg
drawn by: checked by:
date: 04/08/2019

Rev:	date:	description:

THIS DRAWING AND THE DESIGNS, DEPICTIONS, IDEAS AND OTHER INFORMATION CONTAINED HEREIN CONSTITUTE UNPUBLISHED WORK OF tBP/ARCHITECTURE AND SHALL REMAIN THE PROPERTY OF tBP/ARCHITECTURE. NO PORTIONS, NO PART THEREOF SHALL BE REPRODUCED, DISCLOSED, DISTRIBUTED, SOLD, PUBLISHED OR OTHERWISE USED IN ANY WAY WITHOUT THE ADVANCED EXPRESS WRITTEN CONSENT OF tBP/ARCHITECTURE.

drawing title:
METAL STUD PARTITION FIRESTOP DETAILS

drawing no.:
4.02
drawing of

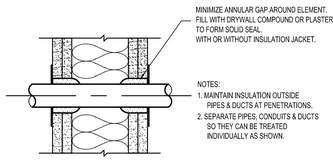

RIGIDLY SUPPORTED PIPE, CONDUIT 0R DUCT THROUGH DRYWALL OR PLASTER. | 1

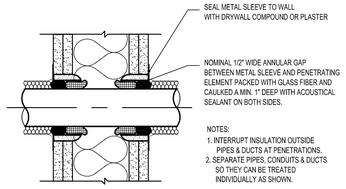

ALL RESILIENTLY SUPPORTED PIPES, DUCTS & CONDUITS THROUGH DRYWALL OR PLASTER. | 2

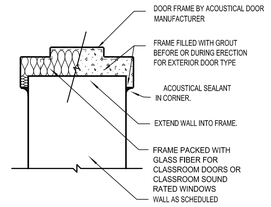

HOLLOW METAL DOOR OR WINDOW FRAME. | 3

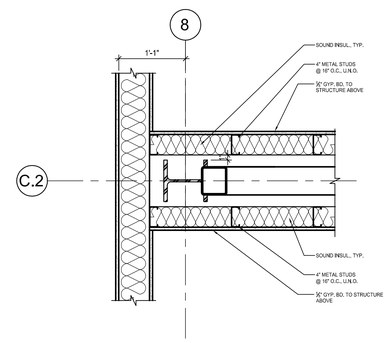

INTERIOR COLUMN @ GRIDLINES 8/C2 (2nd FR) SCALE: NOT TO SCALE | 4

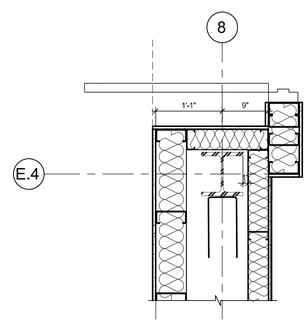

INTERIOR COLUMN @ GRIDLINES 8/E.4 (1st.FR) SCALE: NOT TO SCALE | 5

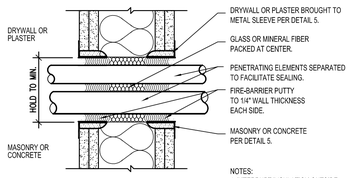

MULTIPLE PIPES OR CONDUITS THRU DRYWALL, PLASTER, MASONRY OR CONCRETE. | 6

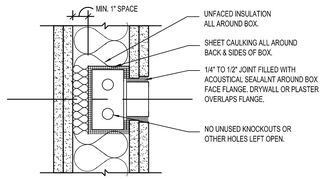

ELECTRICAL BOX UP TO 4"x 8" IN DRYWALL OR PLASTER. | 7

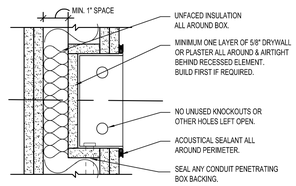

ELECTRICAL BOX OVER 4"x 8" CABINET, FIXTURE, ACCESSORY IN DRYWALL OR PLASTER. | 8

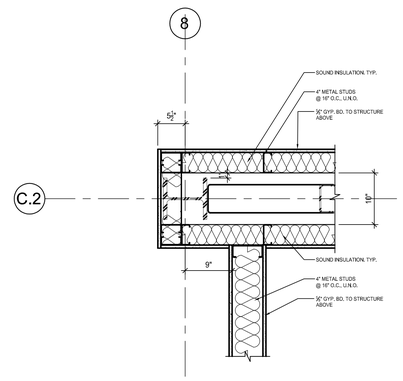

INTERIOR COLUMN @ GRIDLINES 8/C.2 (1st FR) SCALE: NOT TO SCALE | 9

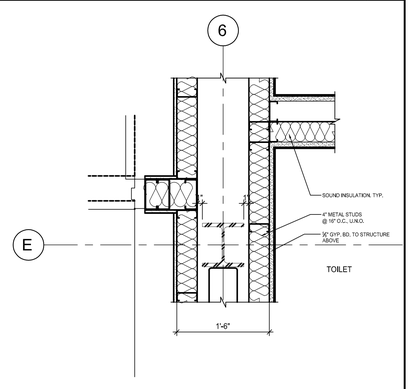

INTERIOR COLUMN @ GRIDLINES 6/E SCALE: NOT TO SCALE | 10

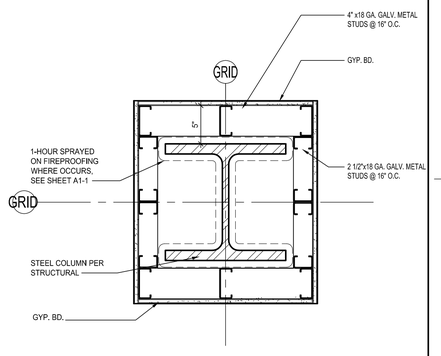

COLUMN DETAIL SCALE: 1 1/2" = 1'-0" | 11

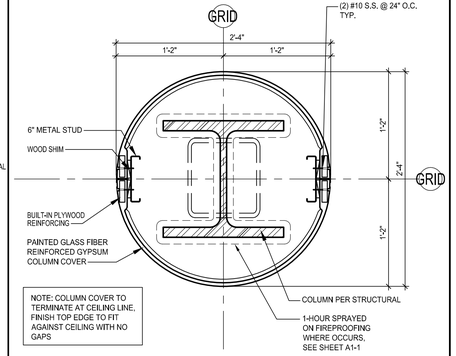

INTERIOR COLUMN DETAIL SCALE: 1-1/2" = 1'-0" | 12

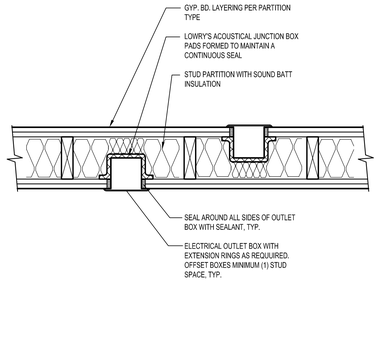

ELECTRICAL OUTLET PLAN DETAIL SCALE: 1-1/2" = 1'-0" | 13

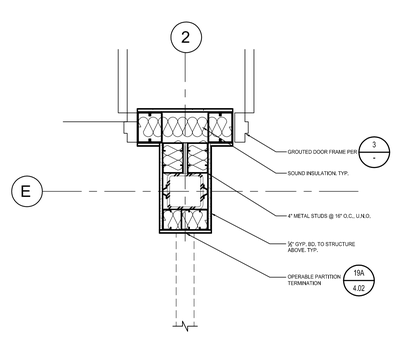

INTERIOR COLUMN @ GRIDLINES 2/E SCALE: NOT TO SCALE | 14

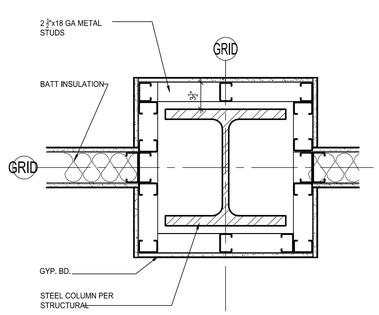

COLUMN DETAIL SCALE: 1 1/2" = 1'-0" | 16

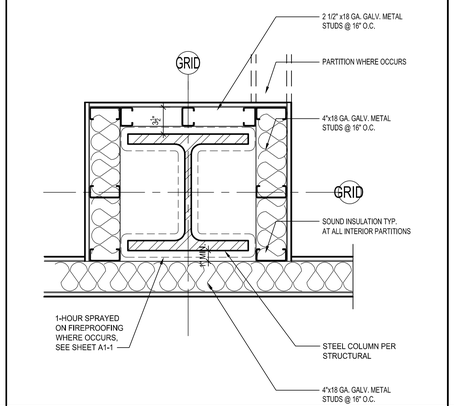

COLUMN DETAIL SCALE: 1 1/2" = 1'-0" | 17

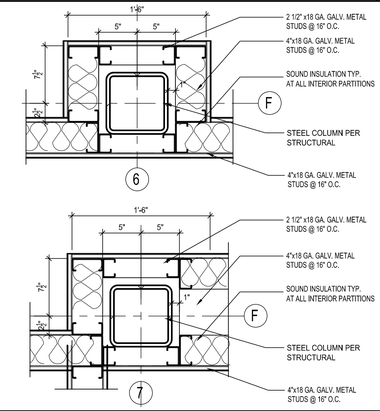

COLUMN DETAILS @ GRID LINE "F" SCALE: 1 1/2" = 1'-0" | 18

IDENTIFICATION STAMP
DIV. OF THE STATE ARCHITECT
APP. 03-119458 INC:
REVIEWED FOR
SS ☑ FLS ☑ ACS ☑
DATE:05/23/2019

DIVISION OF STATE ARCHITECT
355 South Grand Avenue, Suite 2100
Los Angeles, California. 90012
ph: (213) 897-3995 Fax: (213) 897-3159
agency

tBP
architecture
planning
interiors

LICENSED ARCHITECT
JOSEPH PETER WOLNY
No. C25509
REG. 7-31-19
STATE OF CALIFORNIA

tBP/Architecture
4611 Teller Avenue
Newport Beach, CA 92660
ph: 949.673.0300 fx: 949.732.3895
architect

consultant

COMPTON COLLEGE
INSTRUCTIONAL BUILDING No. 2
COMPTON COMMUNITY COLLEGE DISTRICT
1111 E. ARTESIA BLVD. COMPTON, CA.

owner

tBP project number : 20998.00
file name: 0402-MD_metal_types.dwg
drawn by: checked by:
date: 04/08/2019

Rev:	date:	description:

THIS DRAWING AND THE DESIGNS, CONDITIONS, IDEAS AND OTHER INFORMATION CONTAINED HEREIN CONSTITUTE UNPUBLISHED WORK OF tBP/ARCHITECTURE AND SHALL REMAIN THE PROPERTY OF tBP/ARCHITECTURE. NO PORTION SHALL BE REPRODUCED, DISCLOSED, DISTRIBUTED, SOLD, PUBLISHED OR OTHERWISE USED IN ANY WAY WITHOUT THE ADVANCE EXPRESS WRITTEN CONSENT OF tBP/ARCHITECTURE.

drawing title:
INTERIOR METAL STUD PARTITION DETAILS

drawing no.:
4.03
drawing of

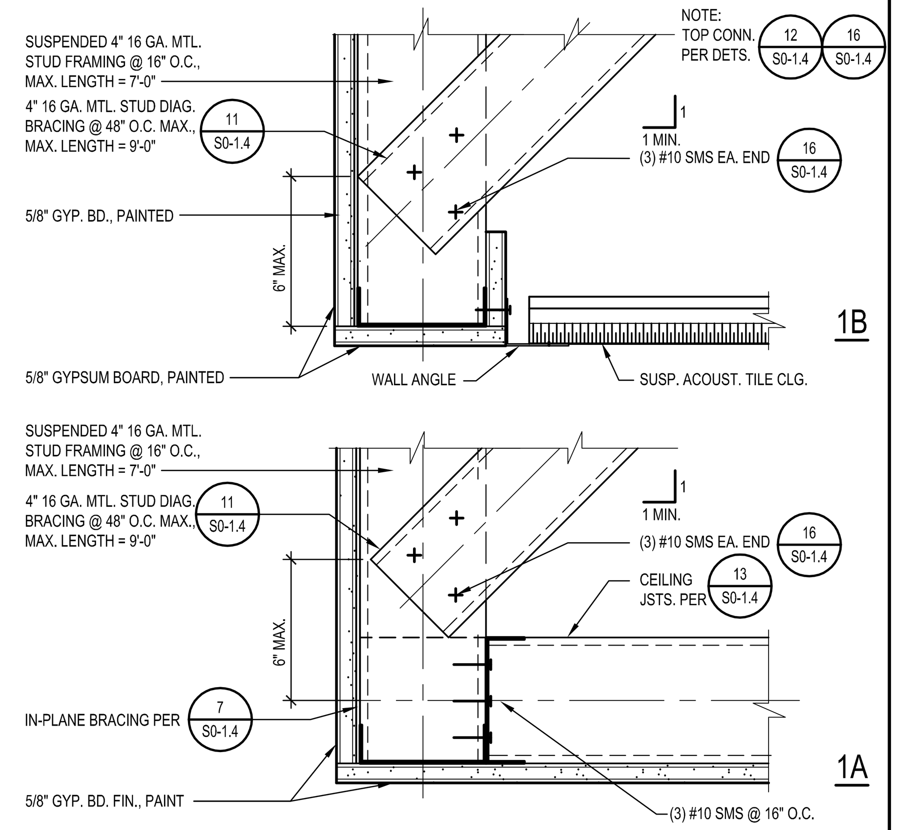

EDGE OF CEILING — 1 — SCALE: 3" = 1'-0"

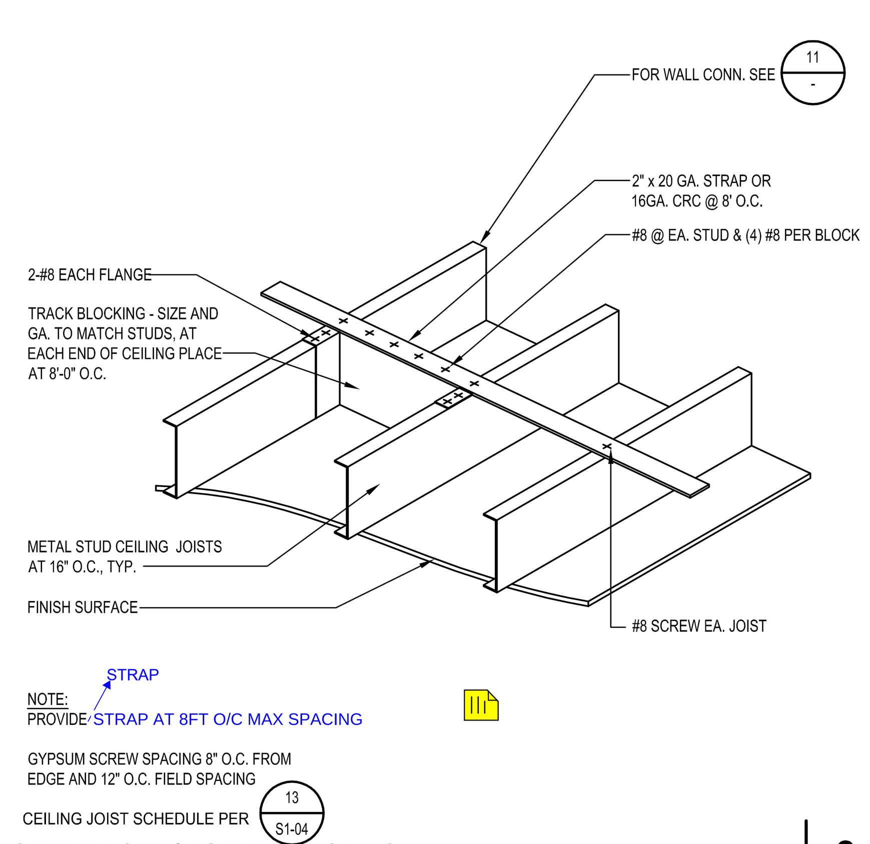

CEILING JOIST BRACING — 2 — SCALE: N.T.S.

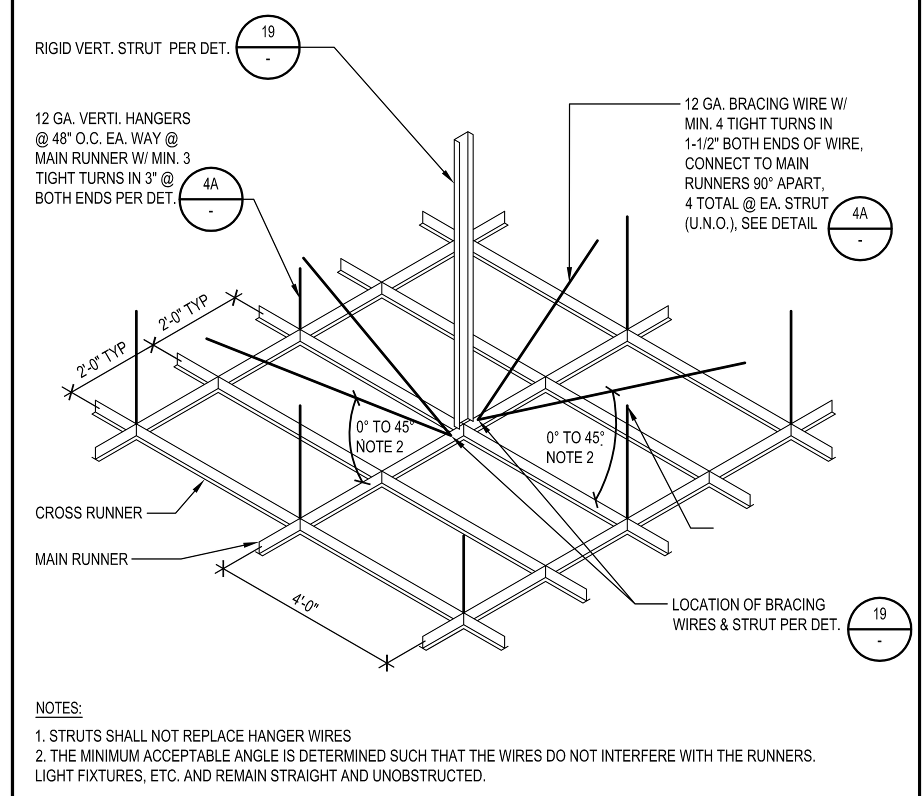

SUSPENSION AND BRACING ASSEMBLY — 3 — SCALE: N.T.S.

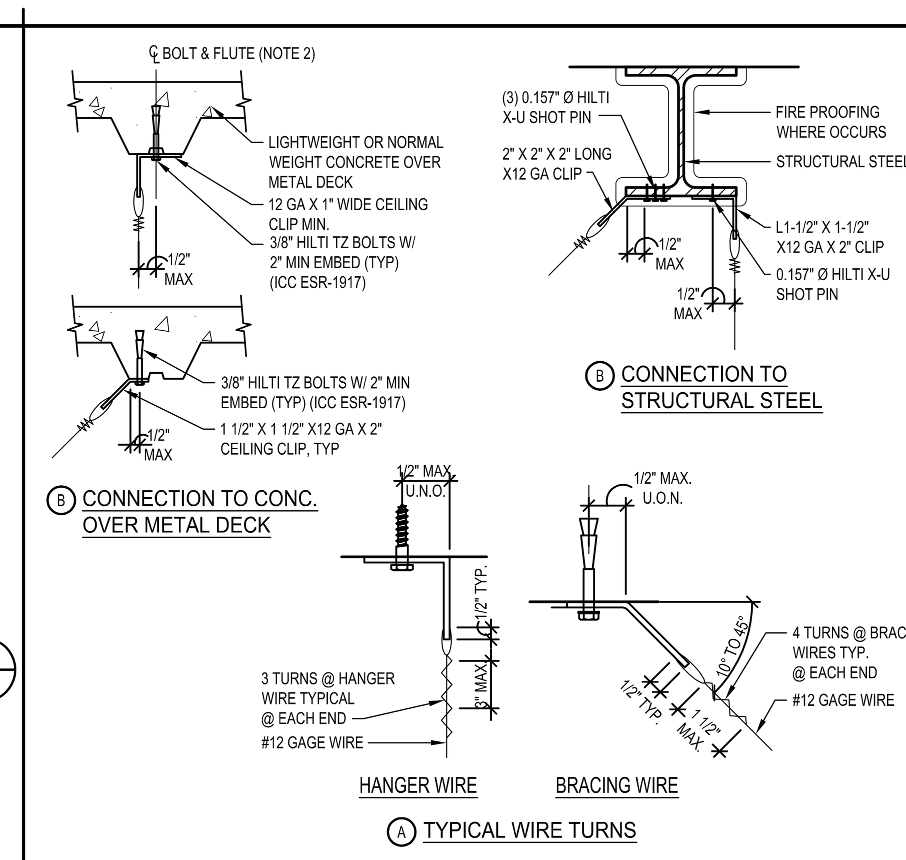

HANGER AND BRACING WIRE — 4 — SCALE: N.T.S.

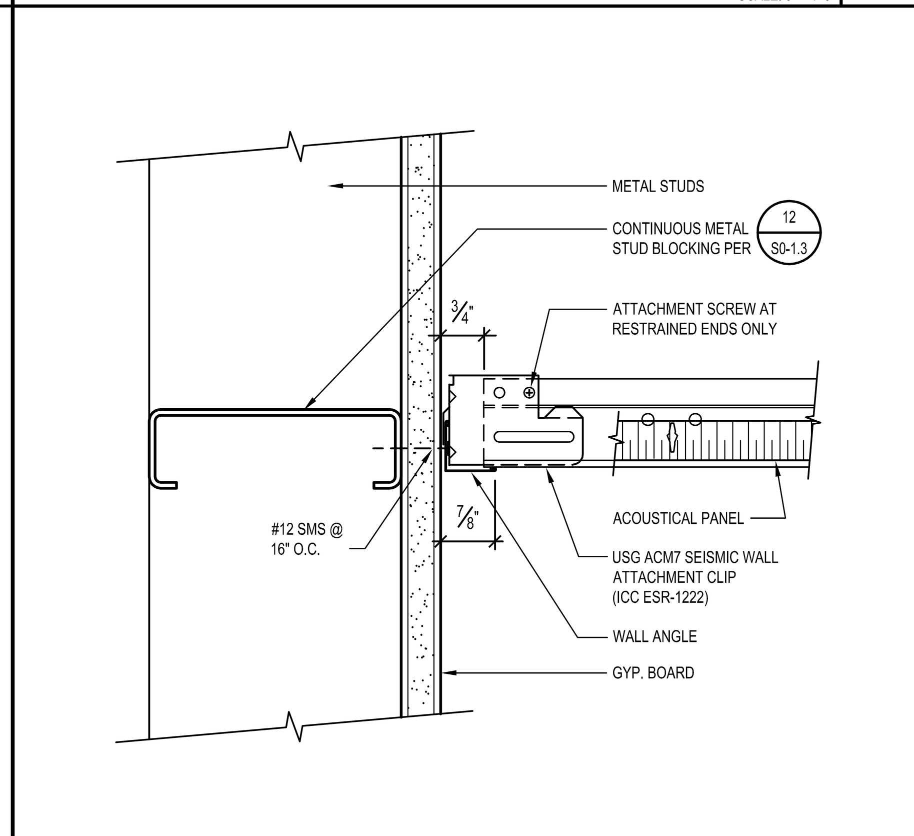

TYPICAL CEILING EDGE W/ ACM7 SEISMIC CLIP — 6 — SCALE: HALF

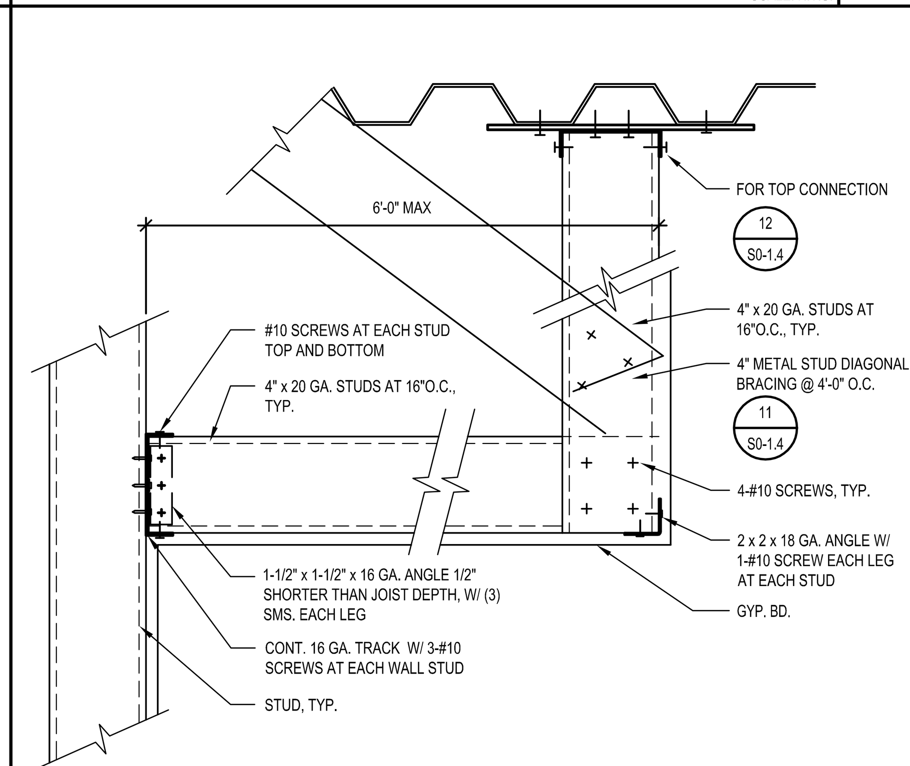

TYPICAL SOFFIT FRAMING — 7 — SCALE: N.T.S.

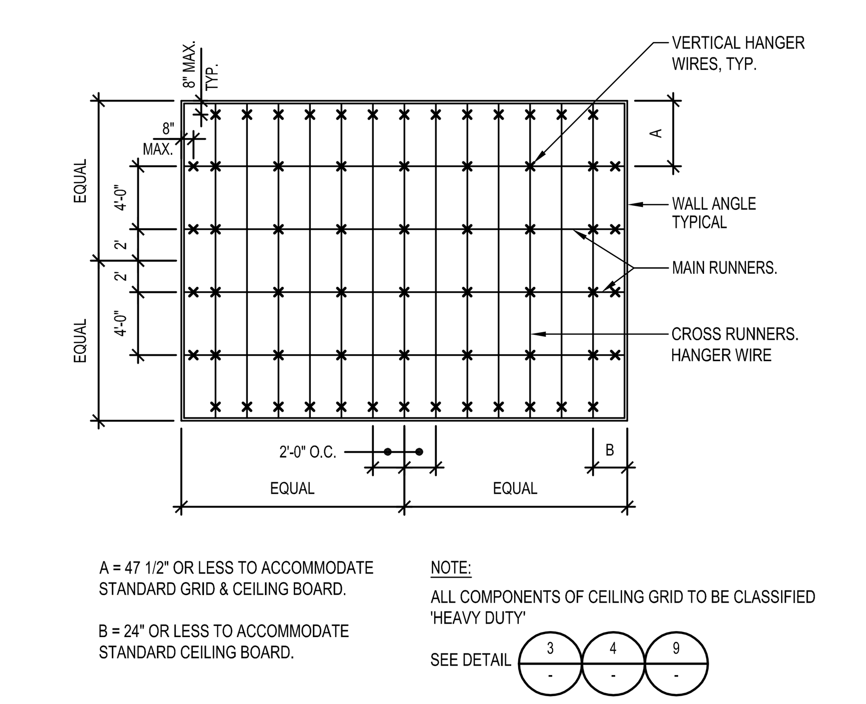

TYPICAL HANGER SUPPORT PLAN — 8 — SCALE: N.T.S.

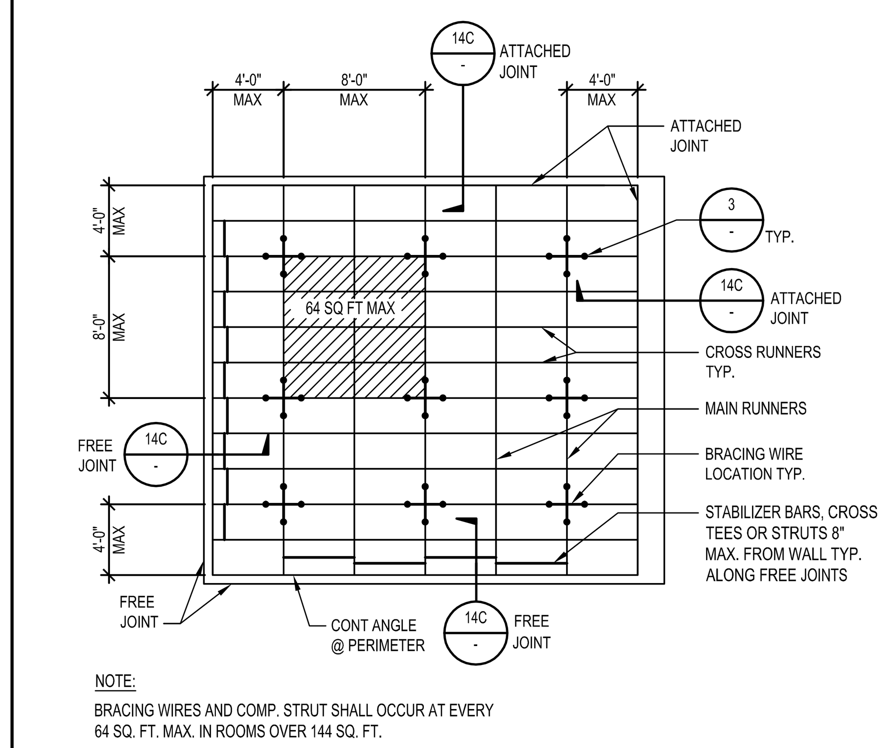

TYPICAL LATERAL BRACING PLAN — 9 — SCALE: N.T.S.

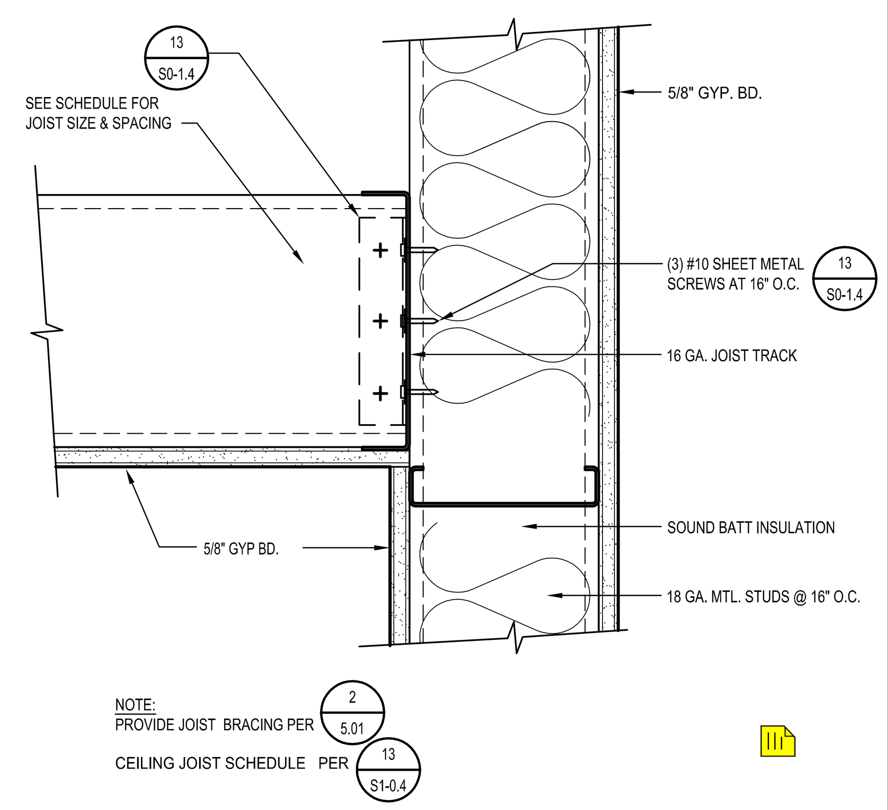

FRAMED GYP. BD. CEILING CONN. AT WALL — 11 — SCALE: 3" = 1'-0"

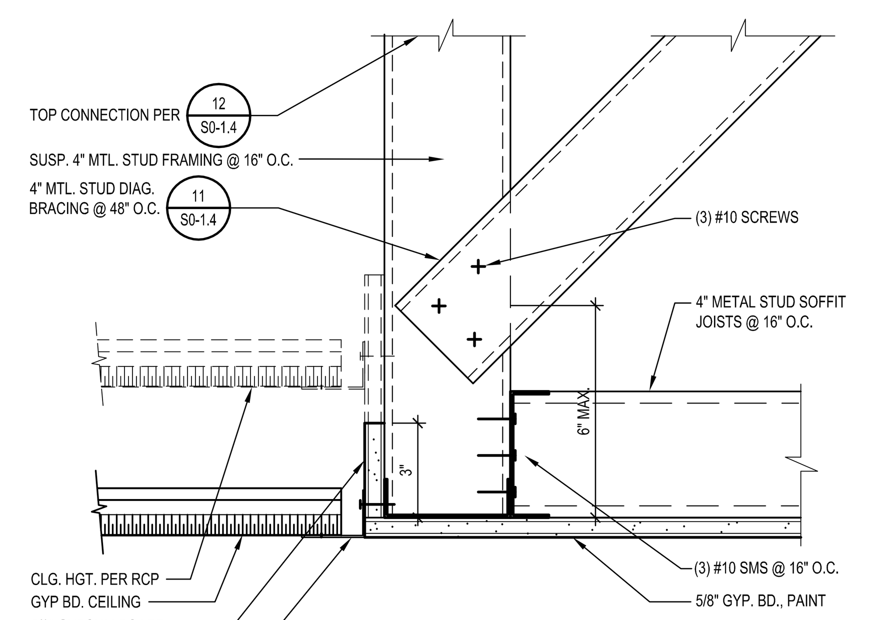

CEILING TRANSITION — 12 — SCALE: 3" = 1'-0"

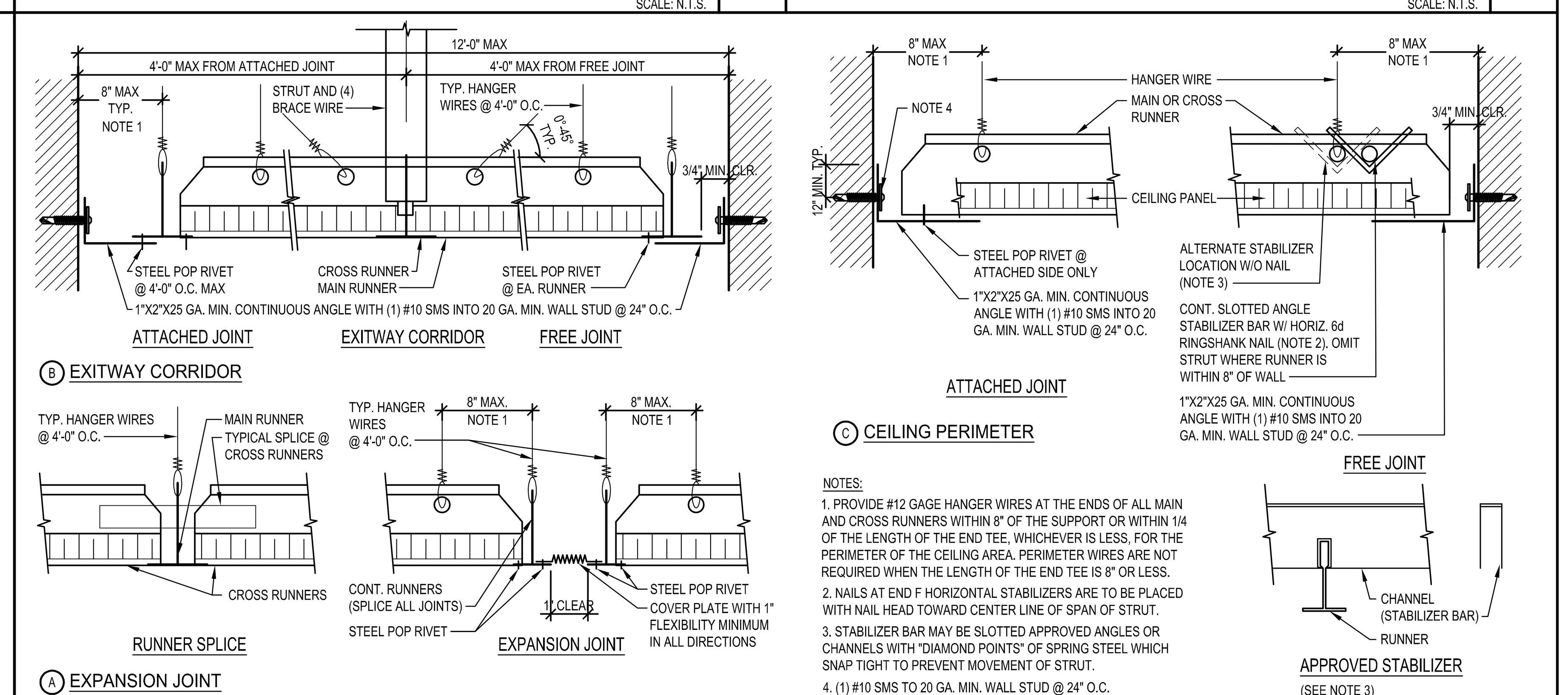

CEILING JOINTS DETAIL — 14 — SCALE: N.T.S.

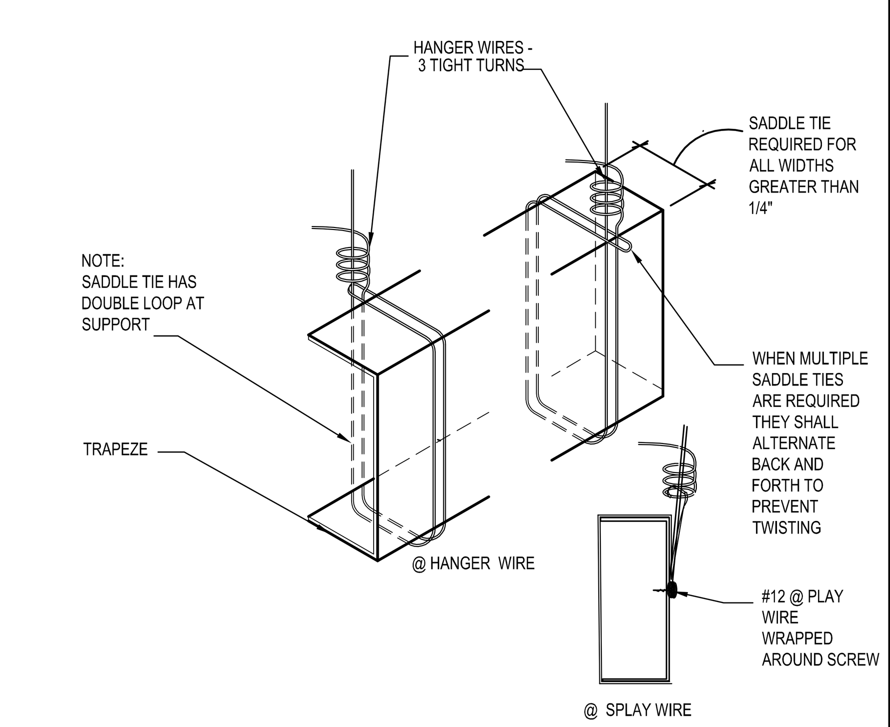

TYPICAL SADDLE TIE — 16 — SCALE: N.T.S.

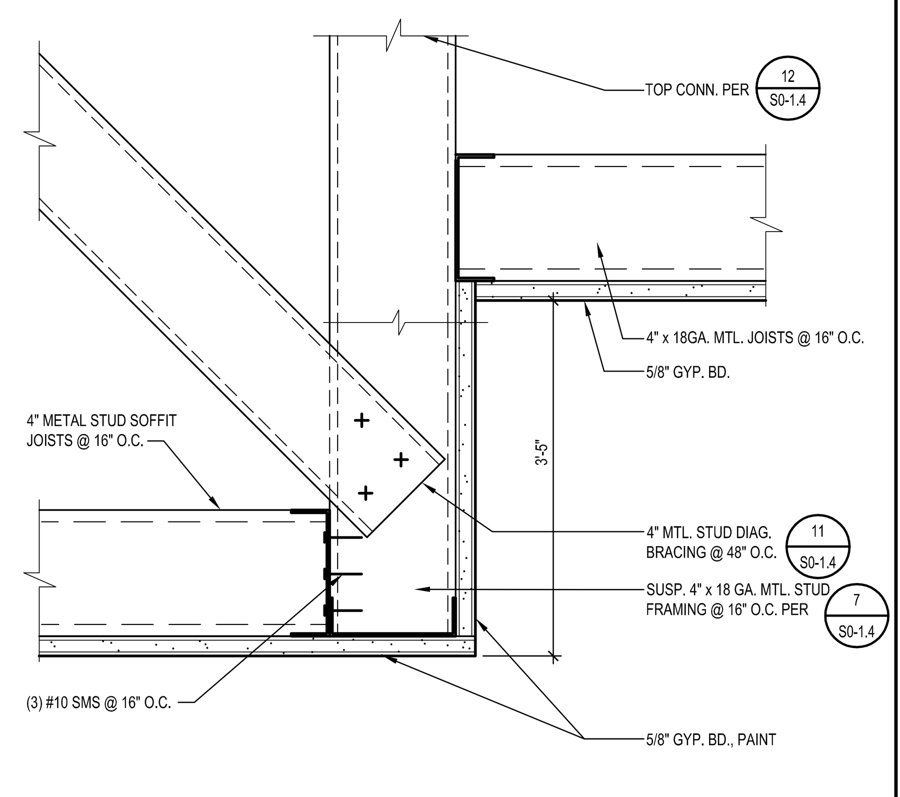

CEILING TRANSITION — 17 — SCALE: 3" = 1'-0"

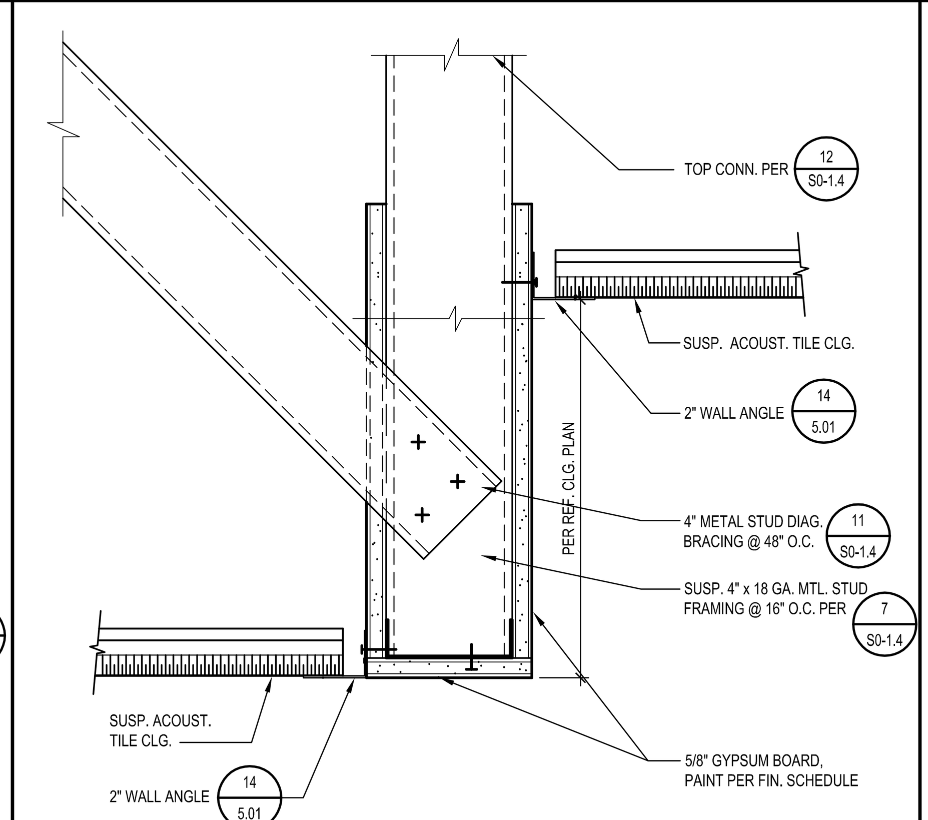

CEILING TRANSITION — 18 — SCALE: 3" = 1'-0"

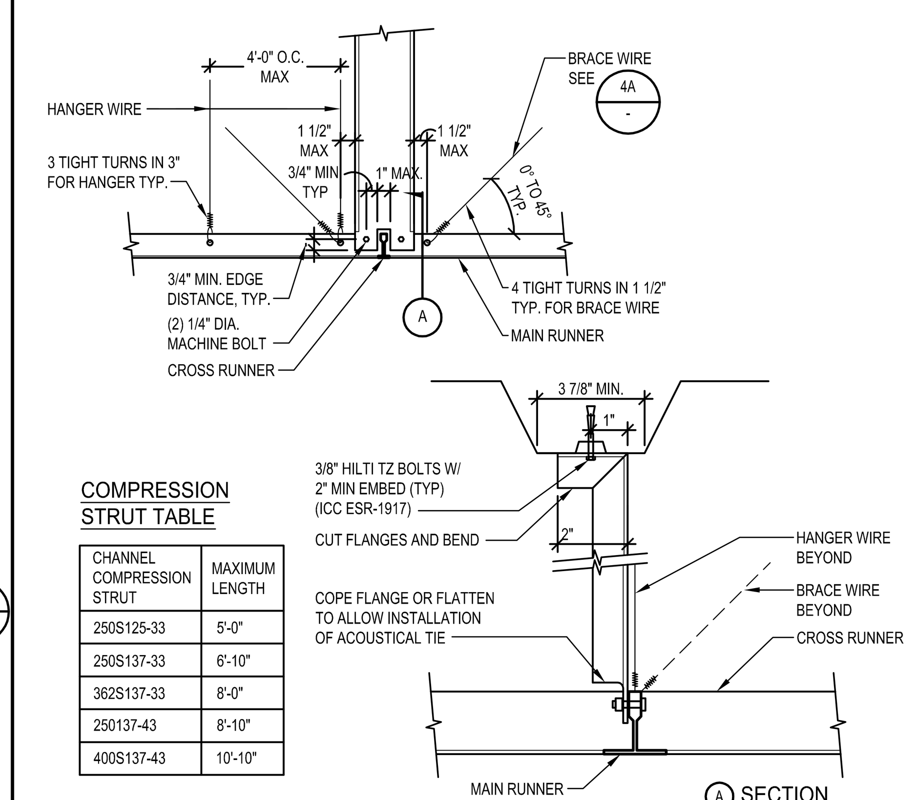

COMPRESSION STRUT TABLE

CHANNEL COMPRESSION STRUT	MAXIMUM LENGTH
250S125-33	5'-0"
250S137-33	6'-10"
362S137-33	8'-0"
250137-43	8'-10"
400S137-43	10'-10"

COMPRESSION STRUT — 19 — SCALE: N.T.S.

SUSPENDED ACOUSTICAL CEILING PANEL SYSTEM NOTES

T-BAR CEILING ASSEMBLY SHALL COMPLY WITH ALL REQUIREMENTS NOTED IN DSA IR 25-2.13

1. CEILING SYSTEM GENERAL NOTES:
1.01 CEILING SYSTEM COMPONENTS SHALL COMPLY WITH ASTM C635-07 AND SECTION 5.1 OF ASTM E580-10A.
1.02 THE CEILING GRID SYSTEM MUST BE RATED HEAVY DUTY AS DEFINED BY ASTM C635-08.
1.03 CEILING SYSTEMS. THE FOLLOWING CEILING SYSTEM(S) IS/ARE PART OF THE SCOPE OF THIS PROJECT:

MANUFACTURER'S NAME ARMSTRONG
PRODUCT EVALUATION REPORT TYPE AND NUMBER ASTM E580/E580M SECTION 5.1.2.
MANUFACTURER'S MODEL NUMBER - MAIN RUNNER PRELUDE XL 7301
MANUFACTURER'S CATALOG NUMBER - CROSS RUNNER XL7328- ICC-ESR-2631

1.04 SEISMIC WALL CLIP:
MANUFACTURER'S MODEL SJCG (ARMSTRONG)
1.05 CEILING PANELS SHALL NOT SUPPORT ANY LIGHT FIXTURES, AIR TERMINALS OR DEVICES.
1.06 FOR CEILING INSTALLATIONS UTILIZING ACOUSTICAL TILE PANELS OF MINERAL OR GLASS FIBER, IT IS NOT MANDATORY TO PROVIDE 3/4" CLEARANCE BETWEEN THE ACOUSTICAL TILE PANELS AND HTE WALL ON THE SIDES OF THE CEILING WHICH ARE FREE TO SLIP. FOR ALL OTHER CEILING PANEL TYPES, PROVIDE 3/4" CLEARANCE BETWEEN THE CEILING PANEL AND THE WALL ON THE SIDES OF THE CEILING FREE TO SLIP.

2. MATERIALS:
2.01 CEILING WIRE SHALL BE CLASS 1 ZINC COATED (GALVANIZED) CARBON STEEL CONFORMING TO ASTM A641-09A. WIRE SHALL BE #12 GAGE (0.106" DIAMETER) WITH SOFT TEMPER AND MINIMUM TENSILE STRENGTH = 70 KSI.
2.02 GALVANIZED SHEET STEEL (INCLUDING THAT USED FOR METAL STUD AND TRACK COMPRESSION STRUTS/POST) SHALL CONFORM TO ASTM A653-11, OR OTHER EQUIVALENT SHEET STEEL LISTED IN SECTION A2.1 OF THE NORTH AMERICAN SPECIFICATION FOR THE DESIGN OF COLD-FORMED STEEL STRUCTURAL MEMBERS 2016 (AISI S100-16). MATERIAL 43 MIL (18 GAGE) AND LIGHTER SHALL HAVE MINIMUM YIELD STRENGTH OF 33 KSI. MATERIAL 54 MIL (16 GAGE) AND HEAVIER SHALL HAVE A MINIMUM YIELD STRENGTH OF 50 KSI.
2.03 ELECTRICAL METALLIC TUBE (EMT) SHALL BE ANSI C80.3/UL 797 CARBON STEEL WITH G90 GALVANIZING. EMT SHALL HAVE MINIMUM YIELD STRENGTH (FY) OF 30 KSI AND MINIMUM ULTIMATE STRENGTH (FU) OF 48 KSI.

3. ATTACHMENT OF HANGER AND BRACING WIRES:
3.01 SEPARATE ALL CEILING HANGER AND BRACING WIRES AT LEAST SIX (6) INCHES FROM ALL UNBRACED DUCTS, PIPES, CONDUIT, ETC.
3.02 HANGER AND BRACING WIRES SHALL NOT ATTACH TO OR BEND AROUND OBSTRUCTIONS INCLUDING BUT NOT LIMITED TO: PIPING, DUCTWORK, CONDUIT AND EQUIPMENT.
3.03 HANGER WIRES THAT ARE MORE THAN ONE (HORIZONTAL) IN SIX (VERTICAL) OUT OF PLUMB SHALL HAVE COUNTER-SLOPING WIRES.
3.04 SLACK SAFETY WIRES SHALL BE CONSIDERED HANGER WIRES FOR INSTALLATION AND TESTING REQUIREMENTS.
3.05 HANGER AND BRACING WIRE ANCHORAGE TO THE STRUCTURE SHALL BE INSTALLED IN SUCH A MANNER THAT THE DIRECTION OF THE ANCHORAGE ALIGNS CLOSELY WITH THE DIRECTION OF THE WIRE. (E.G. BRACING WIRE CEILING CLIPS MUST BE BENT AS SHOWN IN THE DETAILS AND ROTATED AS REQUIRED TO ALIGN CLOSELY WITH THE DIRECTION OF THE WIRE, SCREW EYES IN WOOD MUST BE INSTALLED SO THEY ALIGN CLOSELY WITH THE DIRECTION OF THE WIRE, ETC.)

4. FASTENERS AND WELDING:
4.01 SHEET METAL SCREWS SHALL COMPLY WITH ASTM C1513-10, ASME B18.6.4-89 (R2005). PENETRATION OF SCREWS THROUGH JOINED MATERIAL SHALL NOT BE LESS THAN THREE EXPOSED THREADS.
4.02 EXPANSION ANCHORS SHALL BE: HILTI KB-TZ, ESR-1917
4.03 POWER-ACTUATED FASTENERS SHALL BE: HILTI X-C, ESR-1663
4.04 IF NOT OTHERWISE SPECIFIED IN THE EVALUATION REPORT, POWER-ACTUATED FASTENERS INSTALLED IN STEEL SHALL BE INSTALLED SO THE ENTIRE POINTED END OF THE FASTENER IS DRIVEN THROUGH THE STEEL MEMBER.
4.05 POWER-ACTUATED FASTENERS IN CONCRETE ARE NOT PERMITTED FOR BRACING WIRES.
4.06 CONCRETE REINFORCEMENT AND PRESTRESSING TENDONS SHALL BE LOCATED BY NON-DESTRUCTIVE MEANS PRIOR TO INSTALLING POST - INSTALLED ANCHOR.
4.07 WELDING SHALL BE IN ACCORDANCE WITH AWS D1.3 USING E60XX SERIES ELECTRODES.

5. TESTING: ALL FIELD TESTING MUST BE PERFORMED IN THE PRESENCE OF THE PROJECT INSPECTOR.
5.01 POST-INSTALLED ANCHORS IN CONCRETE USED TO SUPPORT HANGER WIRES SHALL BE TESTED AT A FREQUENCY OF 10 PERCENT. POWER ACTUATED FASTENERS IN CONCRETE SHALL BE FIELD TESTED FOR 200 LBS. IN TENSION. ALL OTHER POST-INSTALLED ANCHORS IN CONCRETE SHALL BE TESTED IN ACCORDANCE WITH CBC SECTION 1705A.3.
5.02 POST-INSTALLED ANCHORS IN CONCRETE USED TO ATTACH BRACING WIRES SHALL BE TESTED AT A FREQUENCY OF 50 PERCENT IN ACCORDANCE WITH CBC SECTION 1910A.5.

6. LIGHT FIXTURES:
6.01 ALL LIGHT FIXTURES SHALL BE POSITIVELY ATTACHED TO THE CEILING SUSPENSION SYSTEMS BY MECHANICAL MEANS TO RESIST A HORIZONTAL FORCE EQUAL TO THE WEIGHT OF THE FIXTURE. A MINIMUM OF TWO SCREWS OR APPROVED FASTENERS ARE REQUIRED AT EACH LIGHT FIXTURE, PER ASTM E580, SECTION 5.3.1.
6.02 SURFACE-MOUNTED LIGHT FIXTURES SHALL BE ATTACHED TO THE MAIN RUNNER WITH AT LEAST TWO POSITIVE CLAMPING DEVICES. THE CLAMPING DEVICE SHALL COMPLETELY SURROUND THE SUPPORTING CEILING RUNNER AND BE MADE OF STEEL WITH A MINIMUM THICKNESS OF #14 GAGE. ROTATIONAL SPRING CATCHES DO NOT COMPLY. A #12 GAGE SLACK SAFETY WIRE SHALL BE CONNECTED FROM EACH CLAMPING DEVICE TO THE STRUCTURE ABOVE. PROVIDE ADDITIONAL SUPPORTS WHEN LIGHT FIXTURES ARE EIGHT (8) FEET OR LONGER OR EXCEED 56 LB. MAXIMUM SPACING BETWEEN SUPPORTS SHALL NOT EXCEED EIGHT (8) FEET.
6.03 LIGHT FIXTURES WEIGHING LESS THAN OR EQUAL TO 10 LB. SHALL HAVE A MINIMUM OF ONE (1) #12 GAGE SLACK SAFETY WIRE CONNECTED FROM THE FIXTURE HOUSING TO THE STRUCTURE ABOVE.
6.04 LIGHT FIXTURES WEIGHING LESS THAN OR EQUAL TO 10 LB. SHALL HAVE A MINIMUM OF ONE (1) #12 GAGE SLACK SAFETY WIRE CONNECTED FROM THE FIXTURE HOUSING TO THE STRUCTURE ABOVE.
6.05 LIGHT FIXTURES WEIGHING GREATER THAN 10 LB. BUT LESS THAN OR EQUAL TO 56 LBS. MAY BE SUPPORTED DIRECTLY ON THE CEILING RUNNERS, BUT THEY SHALL HAVE A MINIMUM OF TWO (2) #12 GAGE SLACK SAFETY WIRES CONNECTED FROM THE FIXTURE HOUSING AT DIAGONAL CORNERS TO THE STRUCTURE ABOVE. EXCEPTION: ALL LIGHT FIXTURES GREATER THAN TWO BY FOUR FEET WEIGHING LESS THAN 56 LBS. SHALL HAVE A #12 GAGE SLACK SAFETY WIRE AT EACH CORNER.
6.06 ALL LIGHT FIXTURES WEIGHING GREATER THAN 56 LB. SHALL BE INDEPENDENTLY SUPPORTED BY NOT LESS THAN FOUR (4) TAUT #12 GAGE HANGER WIRES (ONE AT EACH CORNER) ATTACHED FROM THE FIXTURE HOUSING TO THE STRUCTURE ABOVE OR OTHER APPROVED HANGERS. THE FOUR (4) TAUT #12 GAGE WIRES OR OTHER APPROVED HANGERS, INCLUDING THEIR ATTACHMENT TO THE STRUCTURE ABOVE, SHALL BE CAPABLE OF SUPPORTING FOUR (4) TIMES THE WEIGHT OF THE FIXTURE.

7. SERVICES WITHIN THE CEILING:
7.01 ALL FLEXIBLE SPRINKLER HOSE FITTING MOUNTING BRACKETS, CEILING-MOUNTED AIR TERMINALS OR OTHER SERVICES SHALL BE POSITIVELY ATTACHED TO THE CEILING SUSPENSION SYSTEMS BY MECHANICAL MEANS. SCREWS OR APPROVED FASTENERS ARE REQUIRED. A MINIMUM OF TWO ATTACHMENTS ARE REQUIRED AT EACH COMPONENT.
7.02 CEILING-MOUNTED AIR TERMINALS OR OTHER SERVICES WEIGHING LESS THAN OR EQUAL TO 20 LB. SHALL HAVE ONE (1) #12 GAGE SLACK SAFETY WIRE ATTACHED FROM THE TERMINAL OR SERVICE TO THE STRUCTURE ABOVE.
7.03 FLEXIBLE SPRINKLER HOSE FITTINGS, CEILING-MOUNTED AIR TERMINALS OR OTHER SERVICES WEIGHING MORE THAN 20 LB. BUT LESS THAN OR EQUAL TO 56 LB. SHALL HAVE TWO (2) #12 GAGE SLACK SAFETY WIRES (AT DIAGONAL CORNERS) CONNECTED FROM THE TERMINAL OR SERVICE TO THE STRUCTURE ABOVE.
7.04 FLEXIBLE SPRINKLER HOSE FITTINGS, CEILING-MOUNTED AIR TERMINALS OR OTHER SERVICES WEIGHING MORE THAN 56 LB. SHALL BE SUPPORTED DIRECTLY FROM THE STRUCTURE ABOVE BY NOT LESS THAN FOUR (4) TAUT #12 GAGE HANGER WIRES ATTACHED FROM THE TERMINAL OR SERVICE TO THE STRUCTURE ABOVE OR OTHER APPROVED HANGERS.

8. OTHER DEVICES WITHIN THE CEILING:
8.01 ALL LIGHTWEIGHT MISCELLANEOUS DEVICES, SUCH AS STROBE LIGHTS, OCCUPANCY SENSORS, SPEAKERS, EXIT SIGNS, ETC., SHALL BE ATTACHED TO THE CEILING GRID. IN ADDITION, DEVICES WEIGHING MORE THAN 10 LBS. SHALL HAVE A #12 GAGE SLACK SAFETY WIRE ANCHORED TO THE STRUCTURE ABOVE. DEVICES WEIGHING MORE THAN 20 LB. SHALL BE SUPPORTED INDEPENDENTLY FROM THE STRUCTURE ABOVE.

SUSP. ACOUST. CEILING PANEL SYSTEM NOTES — 20 — SCALE: N.T.S.

IDENTIFICATION STAMP
DIV. OF THE STATE ARCHITECT
APP. 03-119458 INC:
REVIEWED FOR
SS ☑ FLS ☑ ACS ☑
DATE:05/23/2019

DIVISION OF STATE ARCHITECT
355 South Grand Avenue, Suite 2100
Los Angeles, California. 90012
ph: (213) 897-3995 Fax: (213) 897-3159
agency

tBP architecture planning interiors

LICENSED ARCHITECT GARY PAIGE MOON NO. C25409 REN. 7-31-19 STATE OF CALIFORNIA

tBP/Architecture
4611 Teller Avenue
Newport Beach, CA 92660
ph: 949.673.0300 fx: 949.732.3895
architect

consultant

COMPTON COLLEGE
INSTRUCTIONAL BUILDING No. 2
COMPTON COMMUNITY COLLEGE DISTRICT
1111 E. ARTESIA BLVD. COMPTON, CA.
owner

tBP project number : 20998.00
file name: Dtl-0501.dwg
drawn by: checked by:
date: 04/08/2019
Rev: date: description:

THIS DRAWING AND THE DESIGNS, DEPICTIONS, IDEAS AND OTHER INFORMATION CONTAINED HEREIN CONSTITUTE UNPUBLISHED WORK OF tBP/ARCHITECTURE AND SHALL REMAIN THE PROPERTY OF tBP/ARCHITECTURE IN PERPETUITY. NO PART THEREOF SHALL BE REPRODUCED, DISCLOSED, DISTRIBUTED, SOLD, PUBLISHED OR OTHERWISE USED IN ANY WAY WITHOUT THE ADVANCED EXPPESS WRITTEN CONSENT OF tBP/ARCHITECTURE.

drawing title:
CEILING DETAILS - INTERIOR CEILINGS

drawing no.:
5.01
drawing of Y

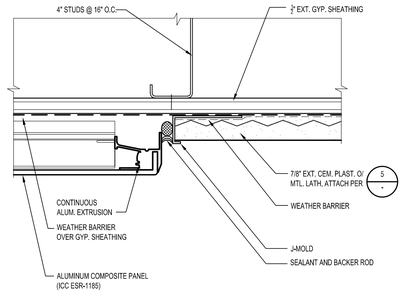

EXTERIOR SOFFIT MATERIAL TRANSITION — SCALE: HALF — 1

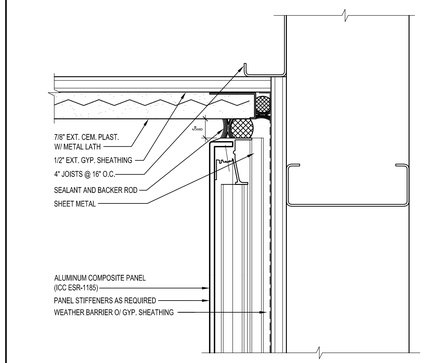

EXTERIOR SOFFIT @ COMP. MTL. PANEL WALL — SCALE: HALF — 2

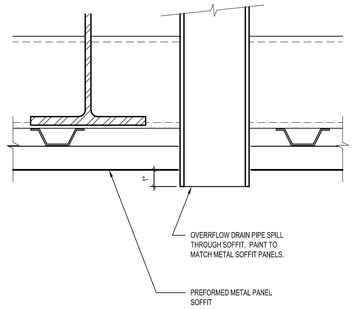

CANOPY OVERFLOW DRAIN — SCALE: 3"=1'-0" — 3

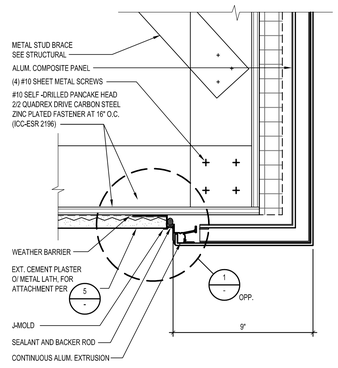

ALUM. COMPOSITE PANEL CORNER @ CANOPY — SCALE: 3"=1'-0" — 4

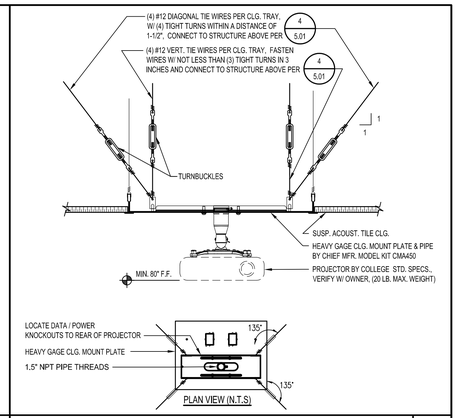

PROJECTOR MOUNT CEILING TRAY — SCALE: 1-1/2" = 1'-0" — 5

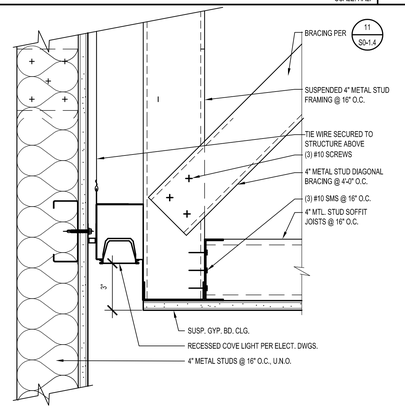

RECESSED COVE LIGHTING — SCALE: 3" = 1'-0" — 6

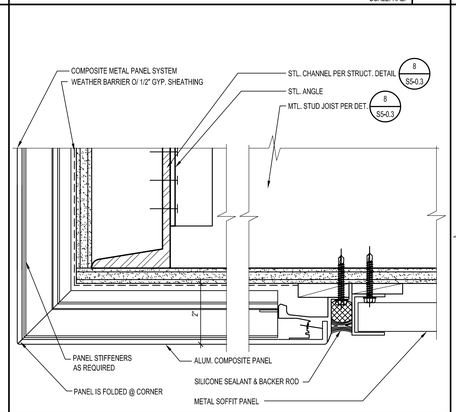

EXTERIOR SOFFIT - MATERIAL TRANSITION — SCALE: HALF — 7

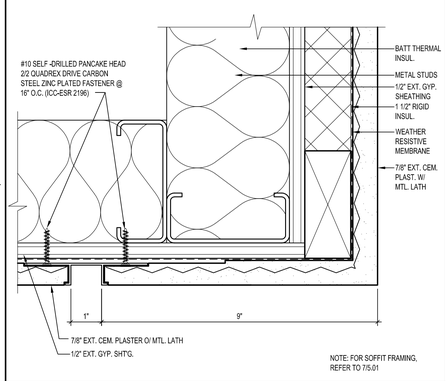

EXTERIOR SOFFIT - CEMENT PLASTER — SCALE: HALF — 8

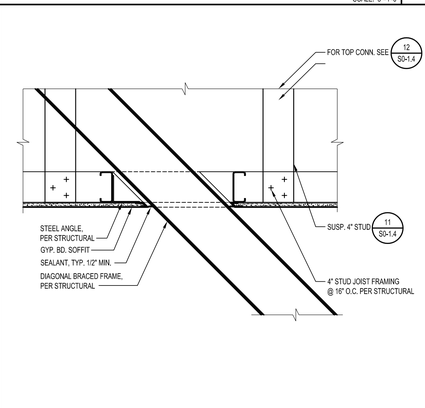

GYP. BD. SOFFIT PENETRATION DETAIL — SCALE: 1-1/2" = 1'-0" — 9

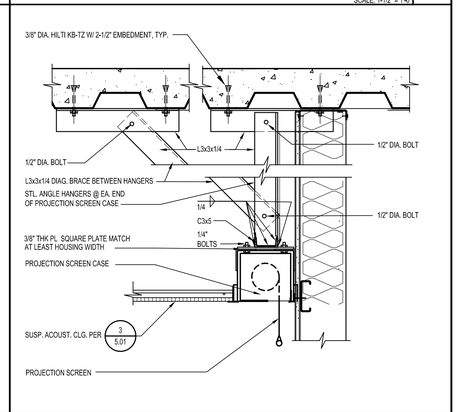

RECESSED PROJECTION SCREEN — SCALE: 1-1/2" = 1'-0" — 10

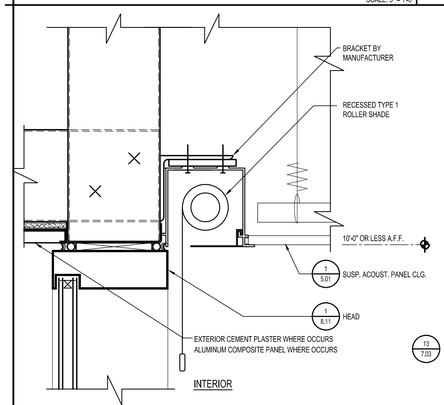

ROLLER SHADE @ ALUM. CURTAIN WALL — SCALE: 3" = 1'-0" — 11

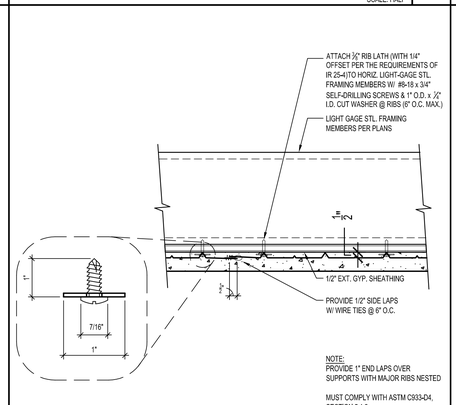

RIB LATH ATTACHMENT TO STEEL JOISTS — SCALE: 3" = 1'-0" — 12

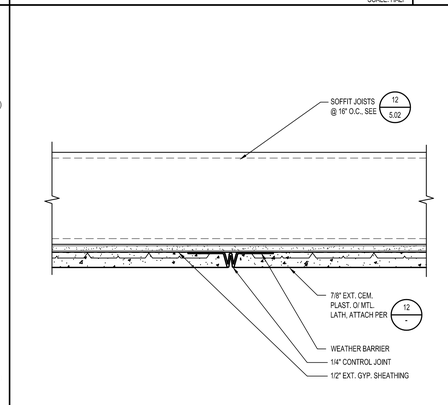

PLASTER SOFFIT CONTROL JOINT — SCALE: 3" = 1'-0" — 13

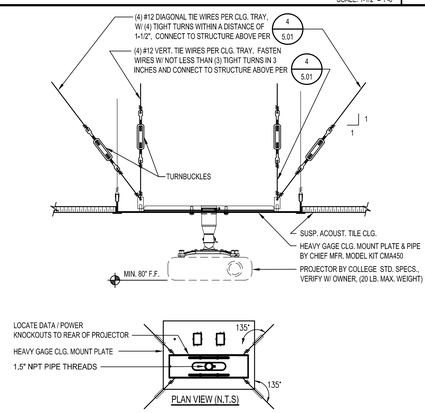

PROJECTOR MOUNT CEILING TRAY — SCALE: 1-1/2" = 1'-0" — 5

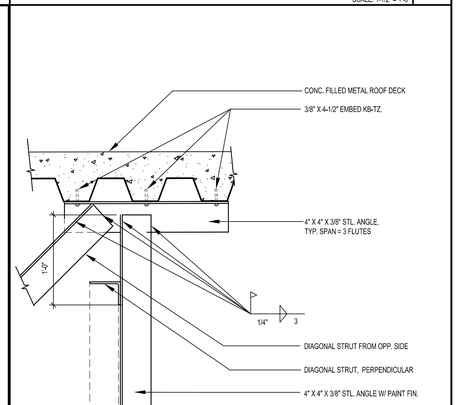

a CONN. AT CONC. FILLED METAL DECK

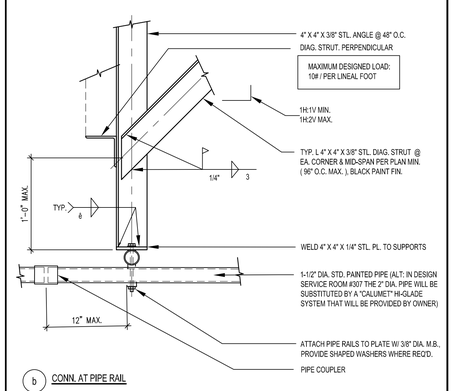

b CONN. AT PIPE RAIL

SUSPENDED PIPE GRID DETAILS — SCALE: 1-1/2" = 1'-0" — 20

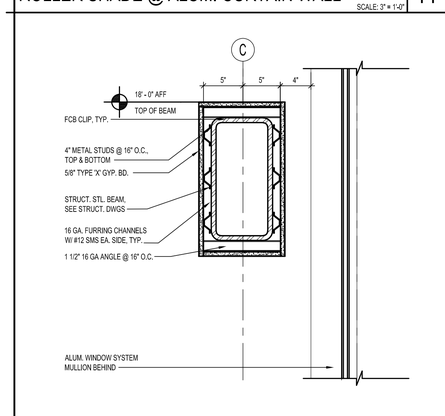

WRAPPED BEAMS — SCALE: 1-1/2" = 1'-0" — 16

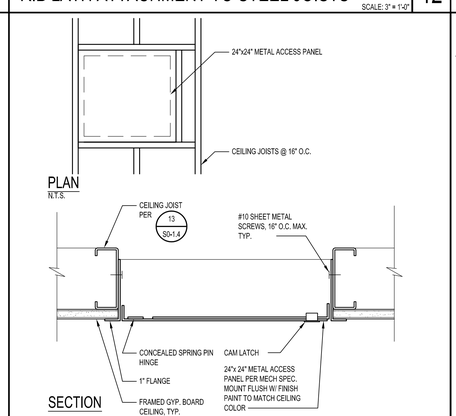

ACCESS PANEL DETAIL @ GYP.BD. — SCALE: 3" = 1'-0" — 17

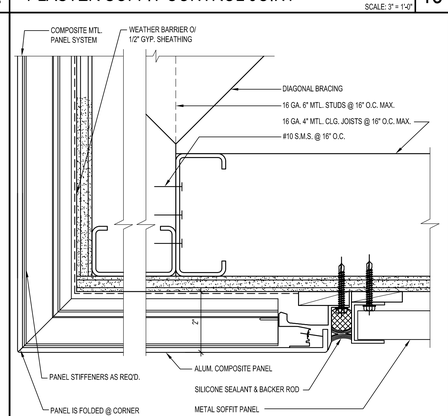

EXTERIOR SOFFIT - MATERIAL TRANSITION — SCALE: HALF — 18

IDENTIFICATION STAMP
DIV. OF THE STATE ARCHITECT
APP. 03-119458 INC:
REVIEWED FOR
SS ☑ FLS ☑ ACS ☑
DATE:05/23/2019

DIVISION OF STATE ARCHITECT
355 South Grand Avenue, Suite 2100
Los Angeles, California. 90012
ph: (213) 897-3995 Fax: (213) 897-3159
agency

tBP
architecture
planning
interiors

LICENSED ARCHITECT
JOHN PAIGE WOOD
No. C26409
REN. 1-31-11
STATE OF CALIFORNIA

tBP/Architecture
4611 Teller Avenue
Newport Beach, CA 92660
ph: 949.673.0300 fx: 949.732.3895
architect

consultant

COMPTON COLLEGE
INSTRUCTIONAL BUILDING No. 2
COMPTON COMMUNITY COLLEGE DISTRICT
1111 E. ARTESIA BLVD. COMPTON, CA.
owner

tBP project number : 20998.00
file name: DI-0502.dwg
drawn by: checked by:
date: 04/08/2019
Rev: date: description:

THIS DRAWING AND THE DESIGNS, CONCEPTIONS, IDEAS AND OTHER INFORMATION CONTAINED HEREIN, CONSTITUTE UNPUBLISHED WORK OF tBP/ARCHITECTURE AND SHALL REMAIN THE PROPERTY OF tBP/ARCHITECTURE. IN PERFORMING, NO PART THEREOF SHALL BE REPRODUCED, DISCLOSED, DISTRIBUTED, SOLD, PURCHASED OR OTHERWISE USED IN ANY WAY WITHOUT THE EXPRESS WRITTEN CONSENT OF tBP/ARCHITECTURE.

drawing title:
CEILING DETAILS

drawing no.:
5.02
drawing of

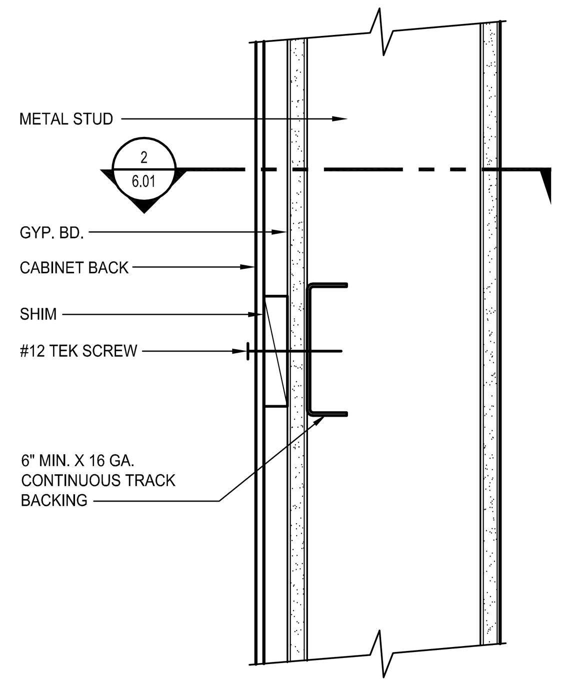

BACKING SECTION - METAL STUDS 1
SCALE: 3" = 1'-0"

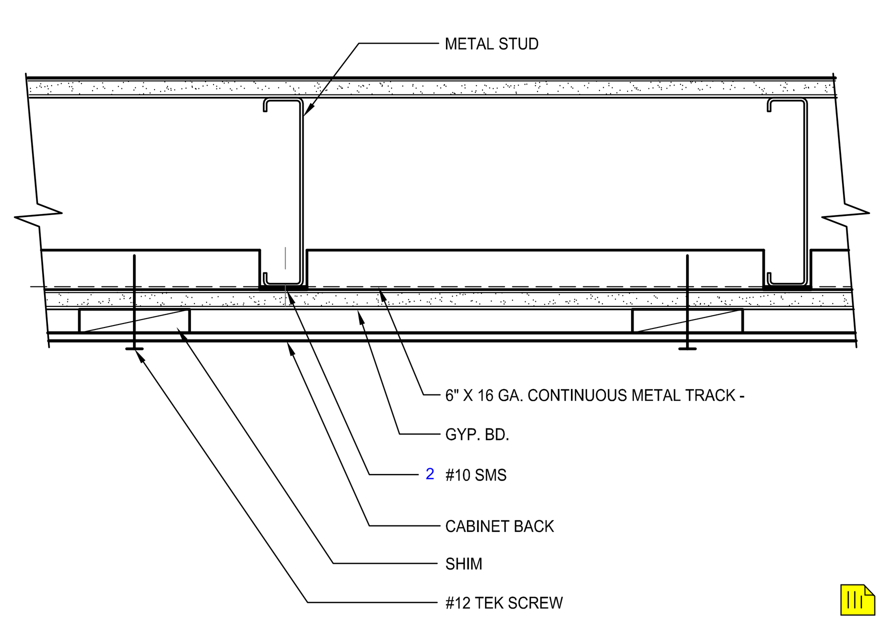

BACKING SECTION - METAL STUDS 2
SCALE: 3" = 1'-0"

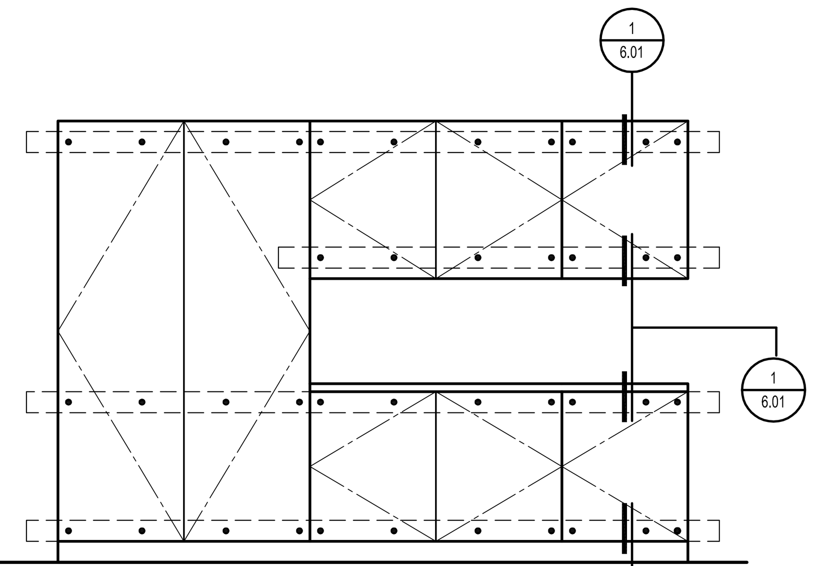

1. #12 LAG SCREWS (AT WOOD STUDS) OR #12 TEK SCREWS (AT METAL STUDS) SPACE ANCHORS AT 16" O.C. , MINIMUM OF ONE SCREW AT EACH TOP AND BOTTOM CORNER OF EACH CABINET UNIT.
2. SEE INTERIOR ELEVATIONS AND FLOOR PLANS FOR CABINET CONFIGURATION AND DIMENSIONS.
3. STUDS OF WALLS BACKING CABINETS SHALL RUN FROM SLAB TO STRUCTURE ABOVE.
4. AT C.M.U. PROVIDE 3/8" HILTI KWIK BOLT 3 MASONRY ANCHORS (ICC # 1385) WITH 2-1/2" MIN. EMBEDMENT.
5. SEE DETAIL 1 AND 2 FOR WALL BACKING AT METAL STUDS.

BACKING AND ANCHORAGE DETAIL 4
SCALE: 1/2" = 1'-0"

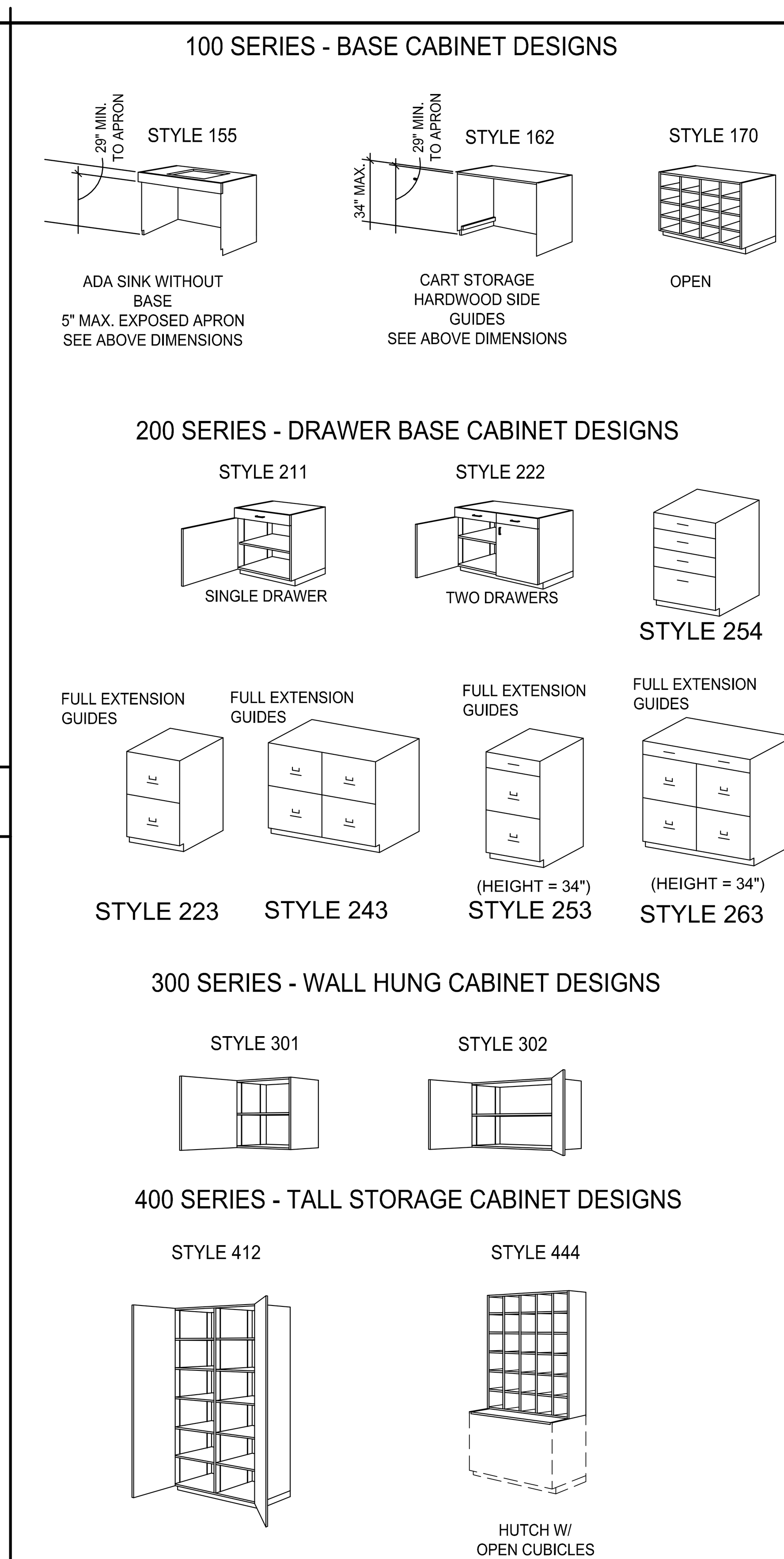

WOODWORK INSTITUTE CABINET DESIGNS 9
N.T.S.

GENERAL NOTES

CASEWORK

1. ONLY THOSE CABINETS CALLED OUT ON BUILDING INTERIOR ELEVATIONS AND FLOOR PLANS SHALL BE PROVIDED.
2. DOOR SWINGS SHALL BE AS SHOWN ON INTERIOR ELEVATIONS. IF NOT ELEVATED, SWINGS SHALL BE AS SHOWN ON DETAIL SHEET ILLUSTRATIONS. SYMBOL 'RS' INDICATES REVERSE SWING.
3. ALL CABINET DIMENSIONS INDICATED ARE NOMINAL OUTSIDE DIMENSIONS, AND SHALL NOT BE EXCEEDED; (EXCEPTION - CABINETS ADJACENT TO WALLS MAY BE INCREASED IN LENGTH TO ELIMINATE THE NEED FOR FILLER STRIPS). A 3/4" TOLERANCE IS PERMITTED ON DIMENSIONS OVER 48". FOR 48" AND SMALLER DIMENSIONS, TOLERANCE IS LIMITED TO 1½%. HEIGHT DIMENSION OF BASE CABINETS INCLUDES FINISHED TOP.
4. ALIGN SIDE OF CABINET WITH EDGE OF DOOR FRAME WHERE OCCURS.
5. PAPER AND CHART STORAGE UNITS SHALL BE 27" DEEP UNLESS OTHER WISE NOTED.
6. ALL CASEWORK SHOWN ON SHEETS A9-1, A9-2, A9-3, A9-4 AND A9-5 SHALL HAVE ADJUSTABLE SHELVES.

COUNTERTOPS AND BACKSPLASHES

1. WHERE BACKSPLASH IS INDICATED, IT SHALL BE 4" HIGH AT NON-SINK AREAS & 6" HIGH OR TO UNDERSIDE OF UPPER CABINETS AT WET AREAS (SEE INTERIOR ELEVATIONS), TOP MOUNTED TYPE, HAVING SQUARE TOP WITH SELF EDGE.

SYMBOLS AND NOTATIONS FOR CABINETS

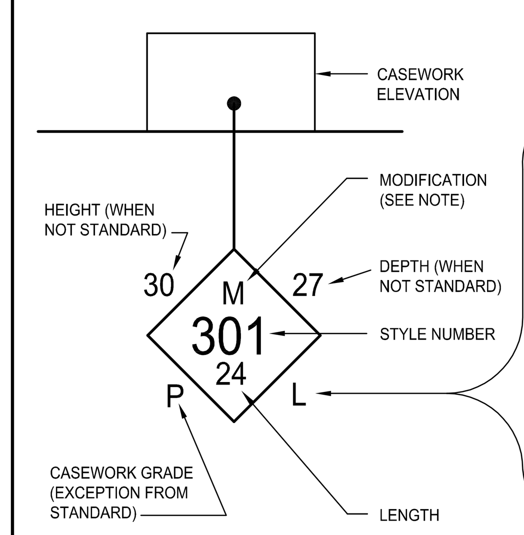

SYMBOL NOTATIONS

C - CHALKBOARD ON BACK
CD - CHALKBOARD ON DOOR
ML - METAL LEGS TO REPLACE CASTERS
WL - WOODEN LEGS TO REPLACE CASTERS
G - GLIDES TO REPLACE CASTERS
L - LOCKS REQUIRED AT ALL DOORS AND/OR DRAWERS IN CABINETS
M - MODIFICATION TO STYLE ONLY
RS - REVERSE SWING OF DOOR FROM THAT SHOWN ON DETAIL SHEETS
T - TACK BOARD ON BACK
TD - TACK BOARD ON DOOR
X - IN LIEU OF STYLE NO. INDICATES SPECIAL DESIGN NOT ILLUSTRATED ON DETAIL SHEETS
7 - SUFFIX ON 100 AND 200 SERIES CONVERTS BASE UNITS TO MOVEABLE UNITS

COUNTERTOP NOTATIONS

LAM. PLAS. - LAMINATED PLASTIC
HD. BD. - HARDBOARD
HDWD. - HARDWOOD
CST - COMPOSITION STONE
LAB. GRADE - ACID-RESISTANT LAMINATED PLASTIC
EP. RES. - EPOXY RESIN

CASEWORK GRADES

P - PREMIUM
C - CUSTOM (TYPICAL GRADE U.N.O.)
E - ECONOMY
LAB - LABORATORY

SEE DETAIL 9 /6.01 FOR WIC DESIGN REFERENCE

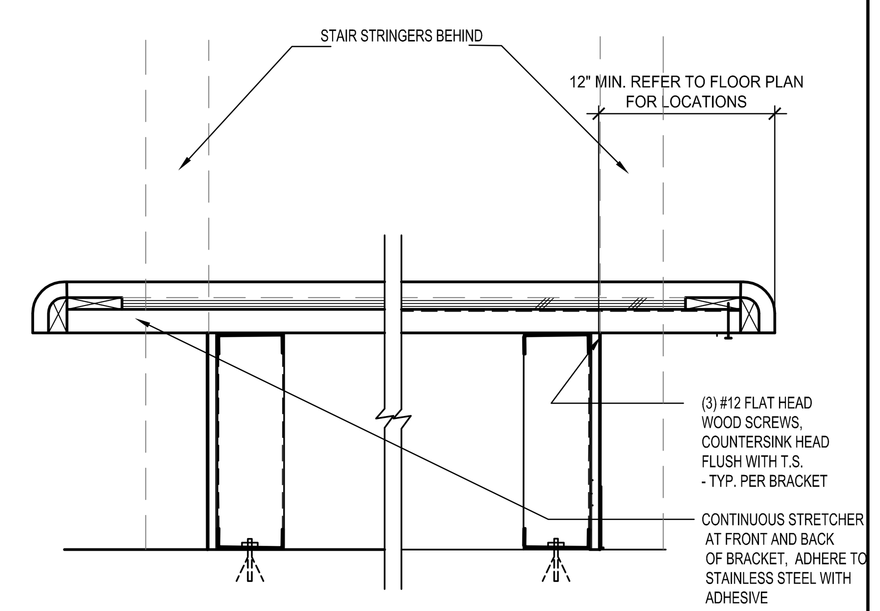

SOLID SURFACE BENCH UNDER LOBBY STAIR 13
SCALE: 1-1/2" = 1'-0"

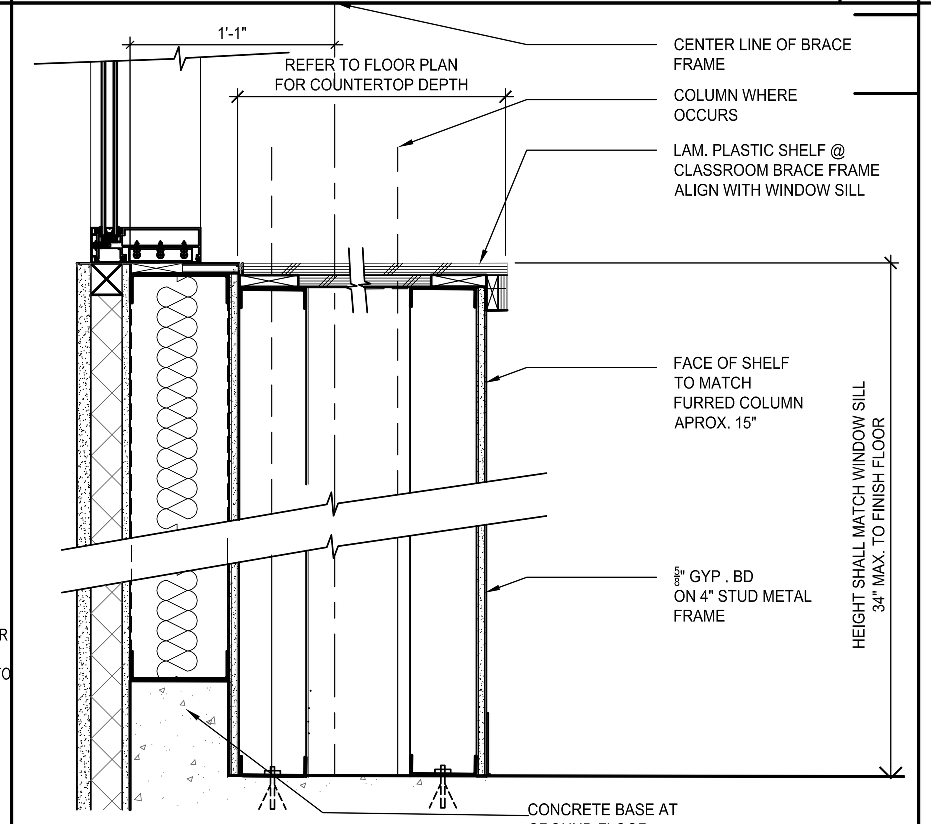

SHELF DETAIL @ BRACE FRAME 14
SCALE: 1-1/2" = 1'-0"

NOTES

1. FAUCET CONTROLS AND OPERATING MECHANISMS SHALL BE OPERABLE WITH ONE HAND AND SHALL NOT REQUIRE TIGHT GRASPING, PINCHING OR TWISTING OF THE WRIST. THE FORCE REQUIRED TO ACTIVATE CONTROLS SHALL BE NO MORE THAN 5 LBS. LEVER OPERATED, PUSH TYPE AND ELECTRONICALLY CONTROLLED MECHANISMS ARE ACCEPTABLE. SELF CLOSING VALVES ARE ALLOWED IF THE FAUCET REMAINS OPEN FOR AT LEAST 10 SECONDS.

PROVIDE REMOVABLE PANEL ATTACHED TO SIDES OF CABINET TYP. @ SINKS, P.LAM FINISH TO MATCH CABINET DOORS.

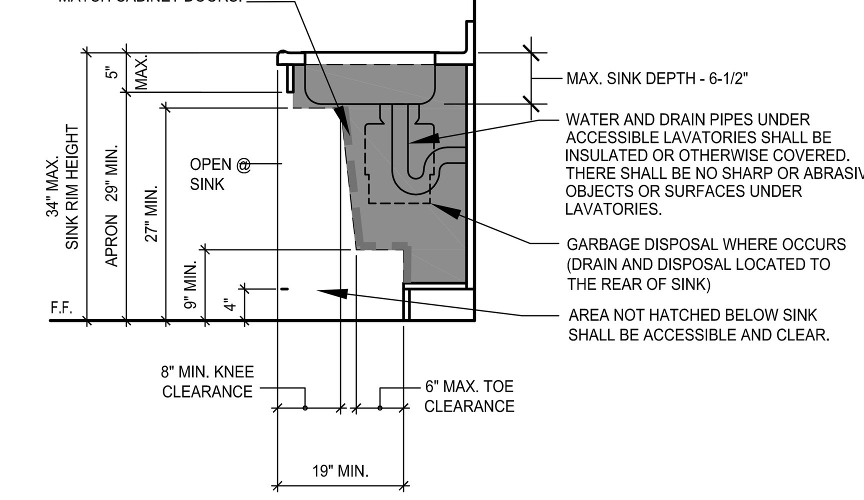

ACCESSIBLE SINK SECTION 15
SCALE: 3/4" = 1'-0"

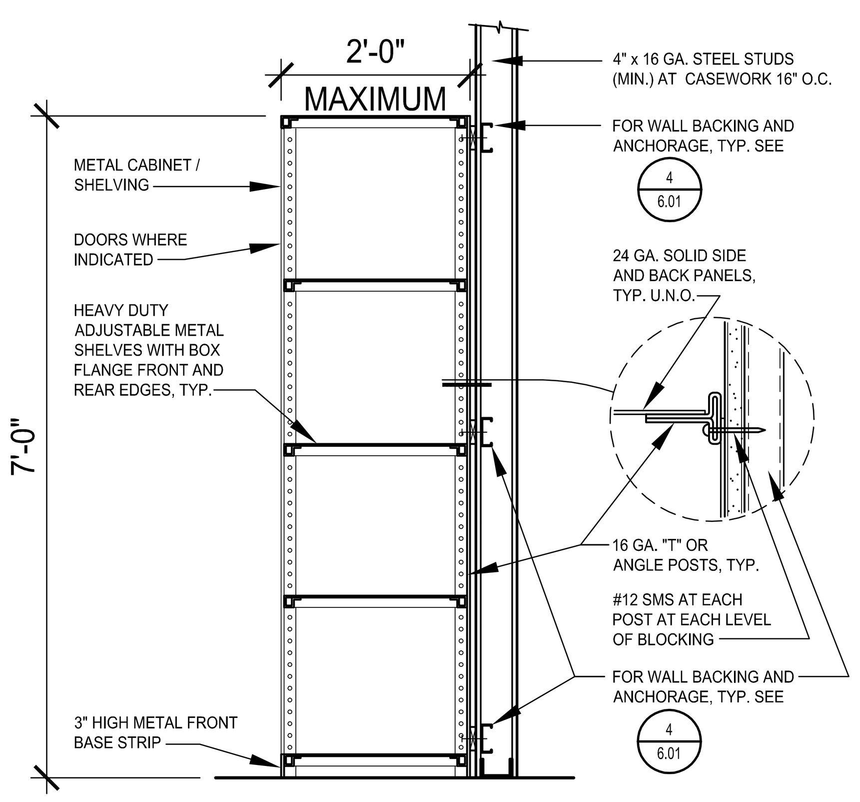

METAL CABINET / SHELVING ANCHORAGE 17
SCALE: 3/4" = 1'-0"

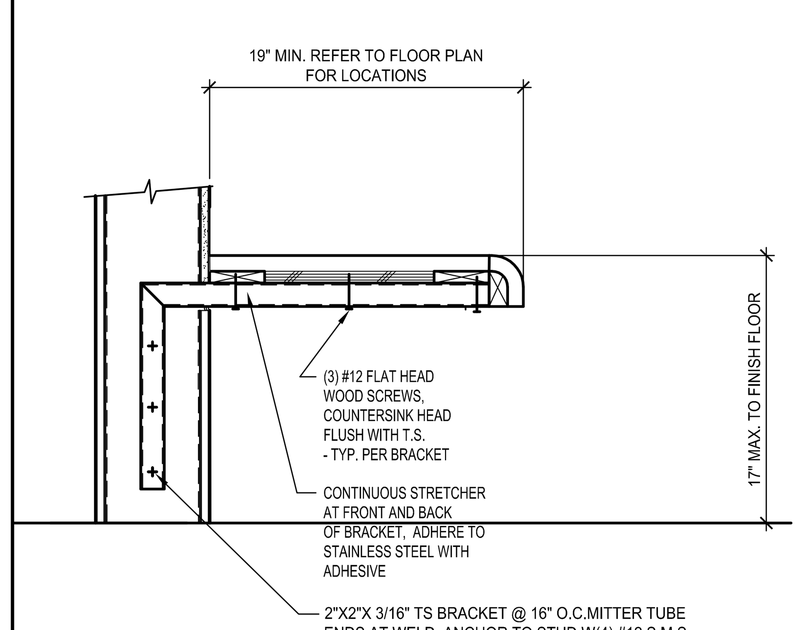

SOLID SURFACE WALLMOUNTED BENCH 18
SCALE: 1-1/2" = 1'-0"

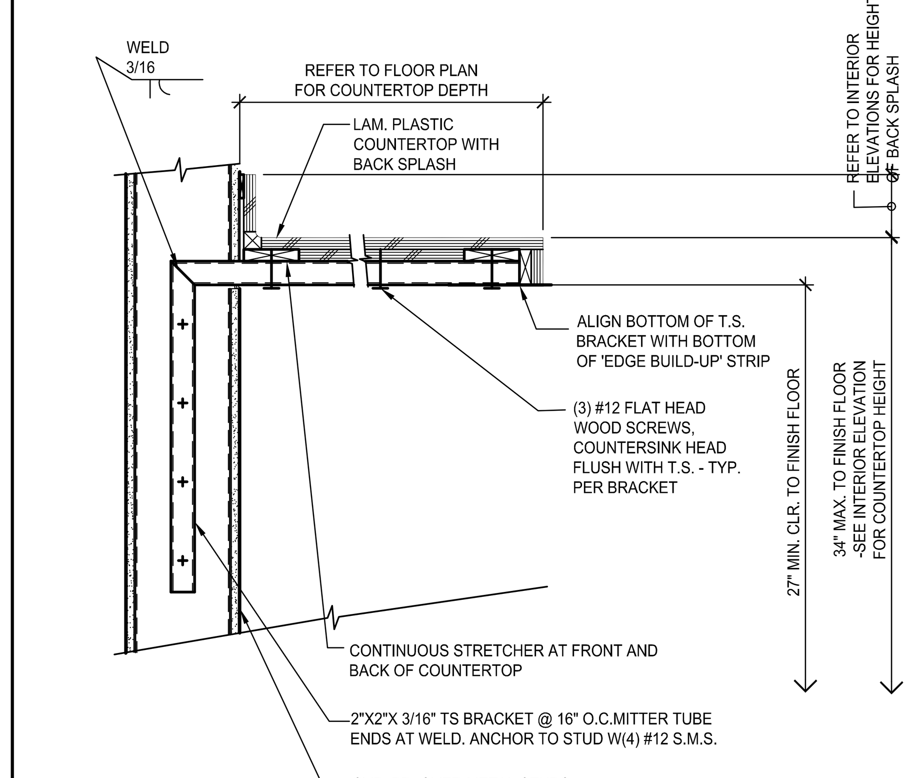

LAM. PLASTIC COUNTERTOP DETAIL 19
SCALE: 1-1/2" = 1'-0"

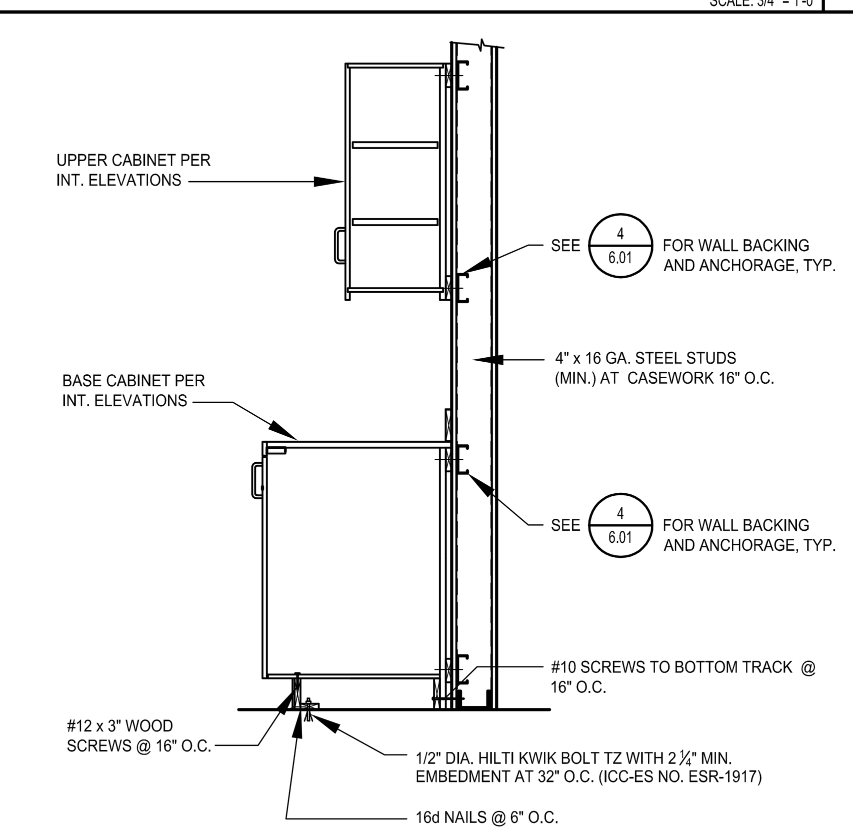

TYPICAL CASEWORK ANCHORAGE 20
SCALE: 3/4" = 1'-0"

IDENTIFICATION STAMP
DIV. OF THE STATE ARCHITECT
APP. 03-119458 INC:
REVIEWED FOR
SS ☑ FLS ☑ ACS ☑
DATE:05/23/2019

DIVISION OF STATE ARCHITECT
355 South Grand Avenue, Suite 2100
Los Angeles, California. 90012
ph: (213) 897-3995 Fax: (213) 897-3159
agency

tBP
architecture planning interiors

LICENSED ARCHITECT
GARY PAIGE MOON
NO. C25409
REN. 7-31-19
STATE OF CALIFORNIA

tBP/Architecture
4611 Teller Avenue
Newport Beach, CA 92660
ph: 949.673.0300 fx: 949.732.3895
architect

consultant

COMPTON COLLEGE
INSTRUCTIONAL BUILDING No. 2

COMPTON COMMUNITY COLLEGE DISTRICT
1111 E. ARTESIA BLVD. COMPTON, CA.

owner

tBP project number : 20998.00
file name: 0601-MD_casework.DWG
drawn by: PM checked by:
date: 04/08/2019
Rev: date: description:

THIS DRAWING AND THE DESIGNS, DEPICTIONS, IDEAS AND OTHER INFORMATION CONTAINED HEREIN CONSTITUTE UNPUBLISHED WORK OF tBP/ARCHITECTURE AND SHALL REMAIN THE PROPERTY OF tBP/ARCHITECTURE IN PERPETUITY. NO PART THEREOF SHALL BE REPRODUCED, DISCLOSED, DISTRIBUTED, SOLD, PUBLISHED OR OTHERWISE USED IN ANY WAY WITHOUT THE ADVANCED EXPRESS WRITTEN CONSENT OF tBP/ARCHITECTURE.

drawing title:
TYPICAL CASEWORK DETAILS

drawing no.:
6.01
drawing of

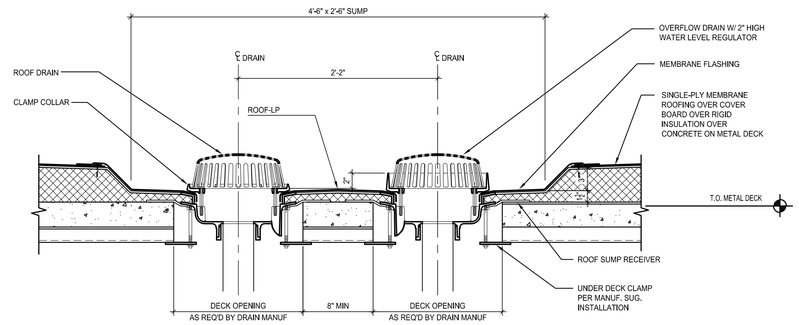

ROOF DRAIN SUMP — SCALE: 1-1/2" = 1'-0" — 2

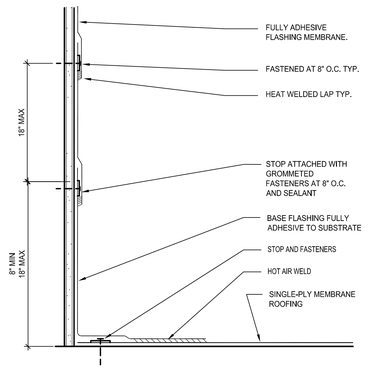

SINGLE PLY ROOFING AT WALL — SCALE: 3" = 1'-0" — 3

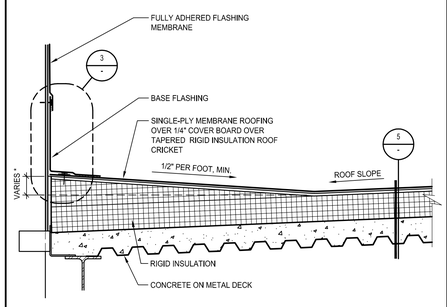

* AS REQUIRED TO PROVIDE MIN. 1/2" PER FT. SLOPE TO DRAIN

ROOF CRICKET DETAIL — SCALE: 1"- 1'-0" — 4

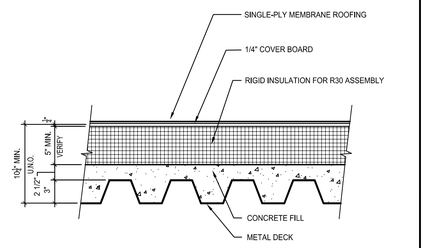

TYP. CONC. ON METAL DECK ROOF SECTION — SCALE: 1-1/2" = 1'-0" — 5

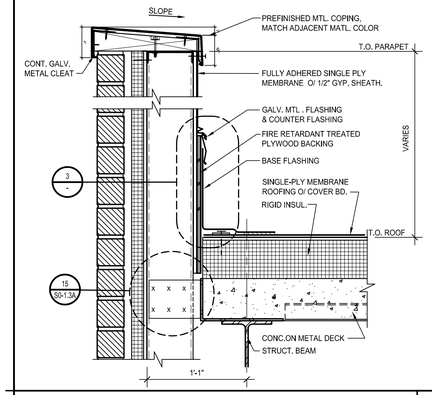

PARAPET - BRICK — SCALE: 1-1/2" = 1'-0" — 6

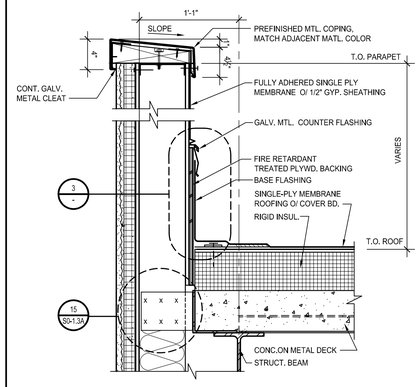

PARAPET - CEMENT PLASTER FIN. — SCALE: 1-1/2" = 1'-0" — 8

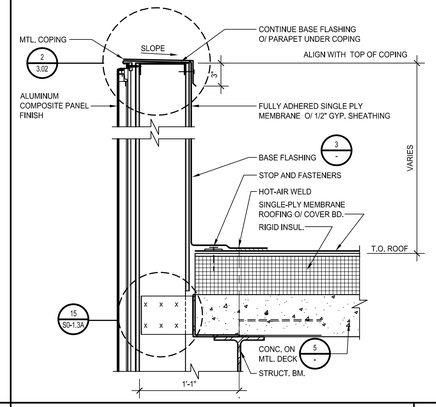

PARAPET - COMP. MTL. PNL. — SCALE: 1-1/2" = 1'-0" — 9

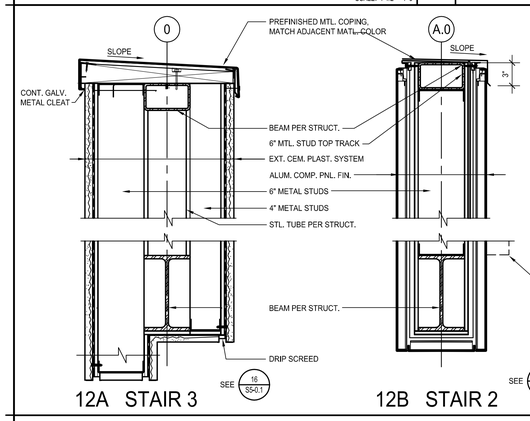

PARAPET - CEMENT PLASTER / ALUMIMUM COMPOSITE PANEL — SCALE: 1-1/2" = 1'-0" — 12

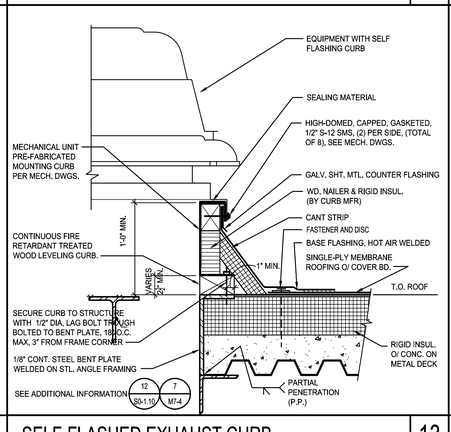

SELF-FLASHED EXHAUST CURB — SCALE: 1-1/2" = 1'-0" — 13

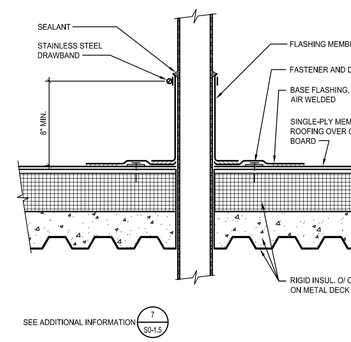

PIPE PENETRATION FLASHING — SCALE: 1-1/2" = 1'-0" — 14

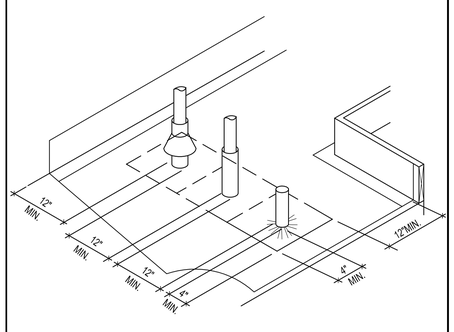

CLEARANCES FOR MULTIPLE PIPES — SCALE: 1-1/2" = 1'-0" — 15

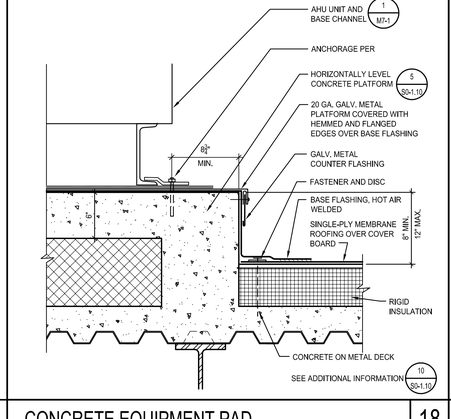

CONCRETE EQUIPMENT PAD — SCALE: 1-1/2" = 1'-0" — 18

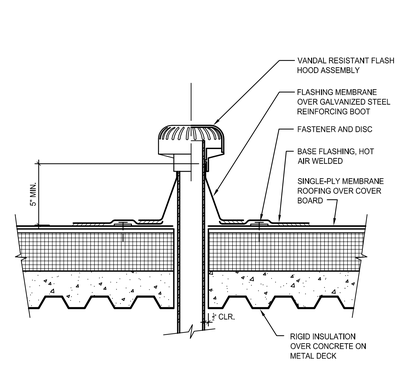

VENT PIPE W/ VANDAL RESISTANT HOOD — SCALE: 1-1/2" = 1'-0" — 19

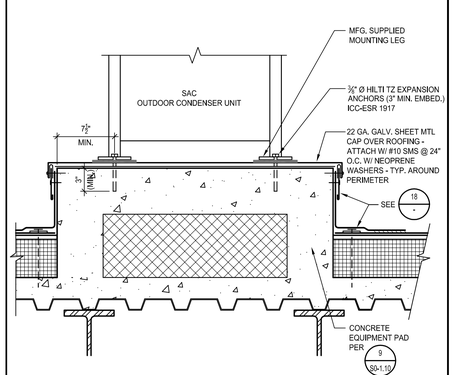

ROOF MOUNTED CONDENSER UNIT PAD — SCALE: 1-1/2" = 1'-0" — 20

IDENTIFICATION STAMP
DIV. OF THE STATE ARCHITECT
APP. 03-119458 INC:
REVIEWED FOR
SS ☑ FLS ☑ ACS ☑
DATE:05/23/2019

DIVISION OF STATE ARCHITECT
355 South Grand Avenue, Suite 2100
Los Angeles, California. 90012
ph: (213) 897-3995 Fax: (213) 897-3159
agency

tBP
architecture
planning
interiors

LICENSED ARCHITECT
CRAIG PAIGE BOSSLEY
No. C25409
REN. 1-31-21
STATE OF CALIFORNIA

tBP/Architecture
4611 Teller Avenue
Newport Beach, CA 92660
ph: 949.673.0300 fx: 949.732.3895
architect

consultant

COMPTON COLLEGE
INSTRUCTIONAL BUILDING No. 2

COMPTON COMMUNITY COLLEGE DISTRICT
1111 E. ARTESIA BLVD. COMPTON, CA.

owner

tBP project number : 20998.00

file name: DTL-0701.dwg

drawn by: ? checked by:

date: 04/08/2019

Rev:	date:	description:

THE DRAWING AND THE DESIGNS, DEFINITIONS, IDEAS AND OTHER INFORMATION CONTAINED HEREIN CONSTITUTE UNPUBLISHED WORK OF tBP/ARCHITECTURE AND SHALL REMAIN THE PROPERTY OF tBP/ARCHITECTURE. NO PORTIONS, NO PART THEREOF SHALL BE REPRODUCED, DISCLOSED, DISTRIBUTED, SOLD, PUBLISHED OR OTHERWISE USED IN ANY WAY WITHOUT THE ADVANCED EXPRESS WRITTEN CONSENT OF tBP/ARCHITECTURE.

drawing title:
ROOF DETAILS

drawing no.:
7.01
drawing of

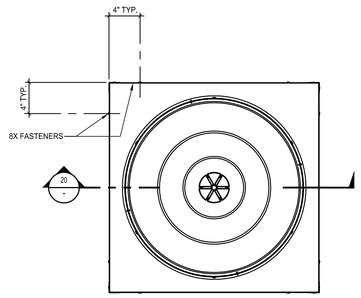

TUBULAR SKYLIGHT- PLAN SCALE: 1-1/2" = 1'-0" 5

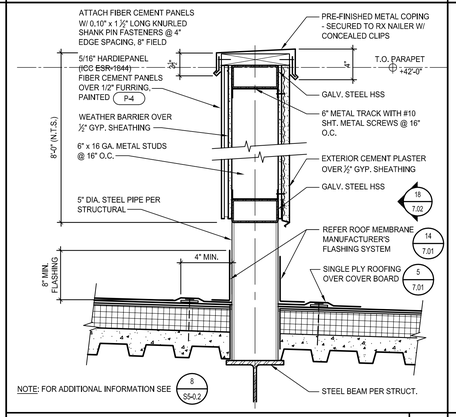

MECHANICAL SCREEN SCALE: 1-1/2" = 1'-0" 8

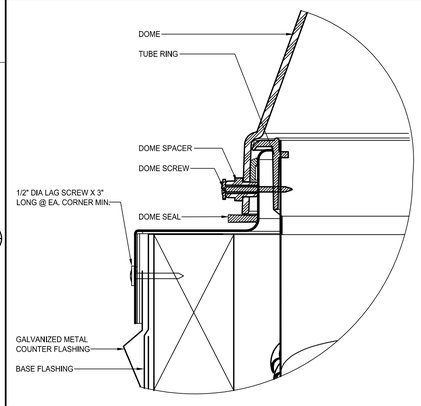

TUBULAR SKYLIGHT - ROOF CURB SECTION SCALE: NOT TO SCALE 9

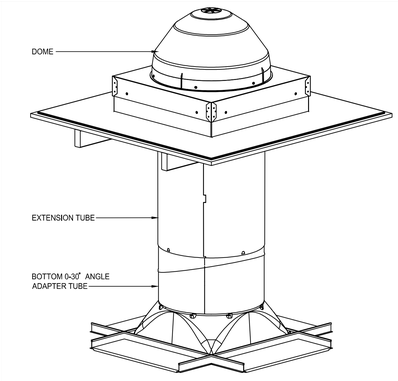

TUBULAR SKYLIGHT SCALE: NOT TO SCALE 10

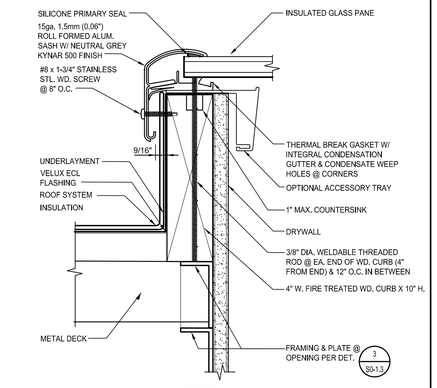

DETAIL 1

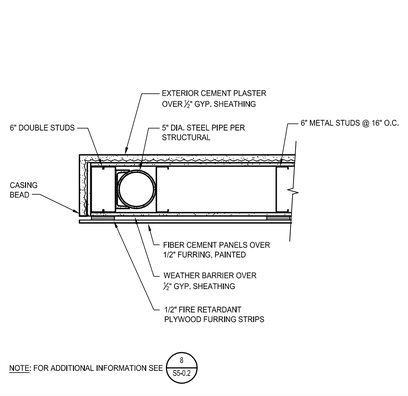

MECHANICAL SCREEN - OPENING JAMB SCALE: 1-1/2" = 1'-0" 12

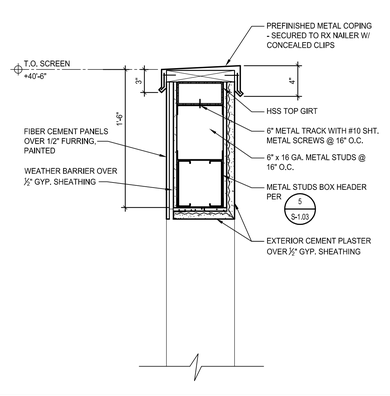

MECHANICAL SCREEN - OPENING HEAD SCALE: 1-1/2" = 1'-0" 13

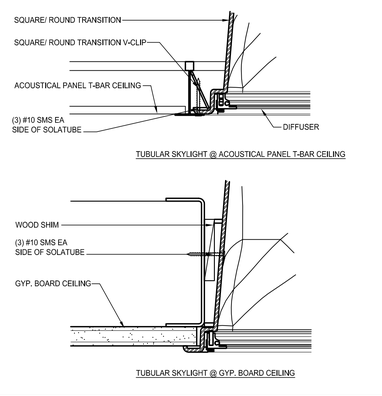

TUBULAR SKYLIGHT- CEILING TRANSITION SCALE: HALF 14

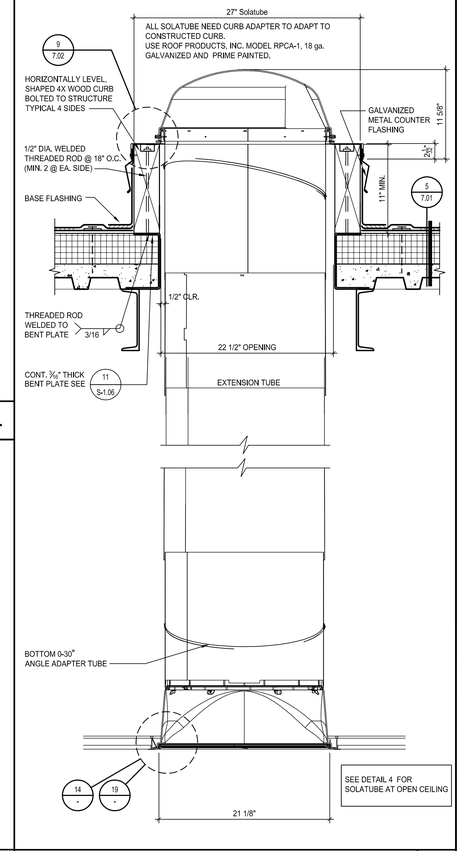

TUBULAR SKYLIGHT- SECTION SCALE: 1-1/2" = 1'-0" 20

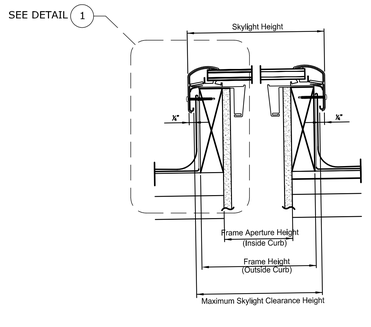

VERTICAL CROSS SECTION

SKYLIGHT - CURB-MOUNT SCALE: NOT TO SCALE 16

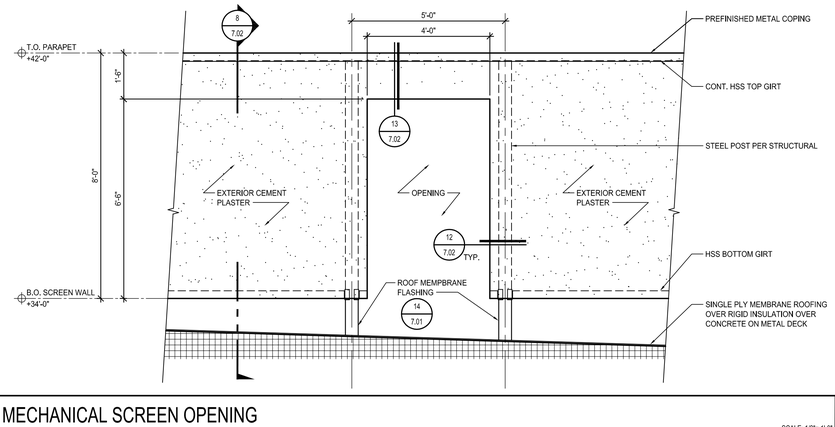

MECHANICAL SCREEN OPENING SCALE: 1/2" = 1'-0" 18

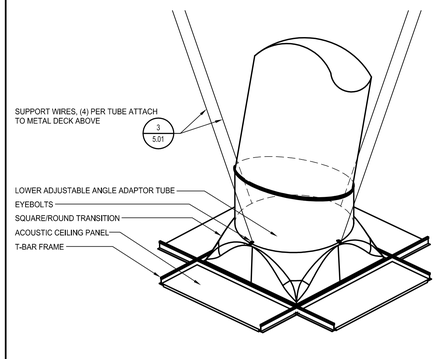

TUBULAR SKYLIGHT SCALE: 1-1/2" = 1'-0" 19

IDENTIFICATION STAMP
DIV. OF THE STATE ARCHITECT
APP. 03-119458 INC:
REVIEWED FOR
SS ☑ FLS ☑ ACS ☑
DATE: 05/23/2019

DIVISION OF STATE ARCHITECT
355 South Grand Avenue, Suite 2100
Los Angeles, California. 90012
ph: (213) 897-3995 Fax: (213) 897-3159
agency

tBP
architecture
planning
interiors
LICENSED ARCHITECT
CRAIG FAGE KOCH
No. C25409
STATE OF CALIFORNIA
tBP/Architecture
4611 Teller Avenue
Newport Beach, CA 92660
ph: 949.673.0300 fx: 949.732.3895
architect
consultant

COMPTON COLLEGE
INSTRUCTIONAL BUILDING No. 2

COMPTON COMMUNITY COLLEGE DISTRICT
1111 E. ARTESIA BLVD. COMPTON, CA.

owner

tBP project number : 20998.00
file name: D8-0702.dwg
drawn by: checked by:
date: 04/08/2019

Rev:	date:	description:

THE DRAWING AND THE DESIGNS, DETAILS, IDEAS AND OTHER INFORMATION CONTAINED HEREIN CONSTITUTE UNPUBLISHED WORK OF tBP/ARCHITECTURE AND SHALL REMAIN THE PROPERTY OF tBP/ARCHITECTURE IN PERPETUITY. NO PART THEREOF SHALL BE REPRODUCED, DISCLOSED, DISTRIBUTED, SOLD, PUBLISHED OR OTHERWISE USED IN ANY WAY WITHOUT THE ADVANCED EXPRESS WRITTEN CONSENT OF tBP/ARCHITECTURE.

drawing title:
ROOF DETAILS

drawing no.:
7.02
drawing of

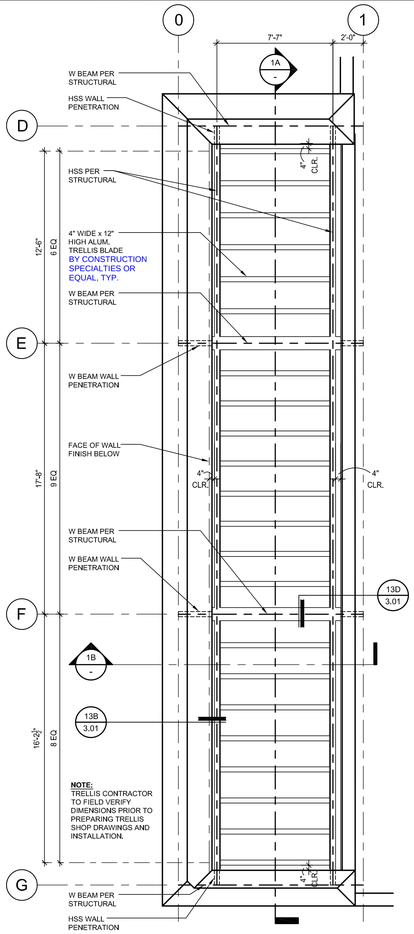

1C ENLARGED TRELLIS PLAN
SCALE: 1/4" = 1'-0"

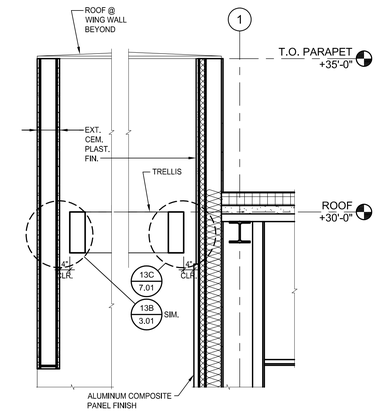

1B TRELLIS SECTION
SCALE: 1/2" = 1'-0"

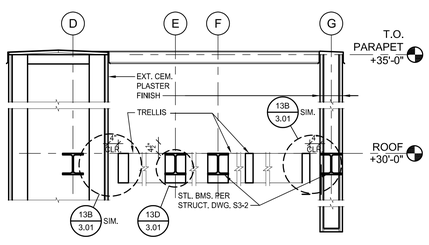

1A TRELLIS SECTION
SCALE: 1/2" = 1'-0"

9/6/2018 12:45:26 PM thull

WEST ROOF TRELLIS (ABOVE EXT. STAIR 3) | 1

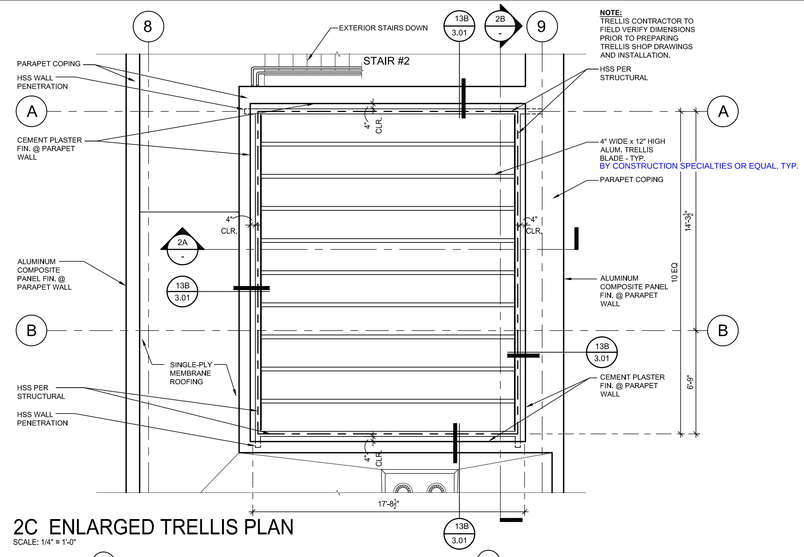

2C ENLARGED TRELLIS PLAN
SCALE: 1/4" = 1'-0"

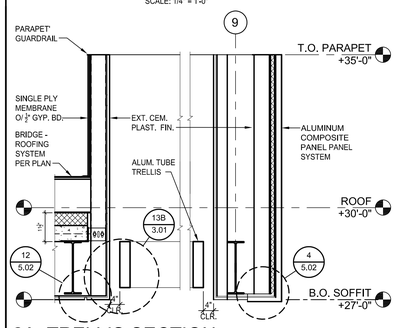

2A TRELLIS SECTION
SCALE: 1/2" = 1'-0"

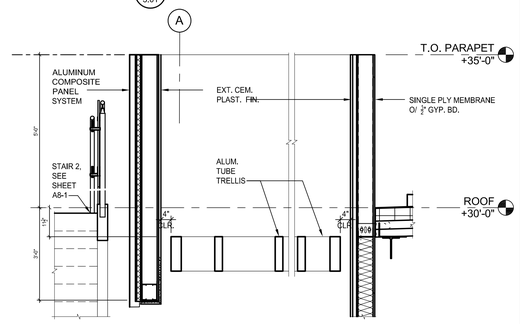

2B TRELLIS SECTION
SCALE: 1/2" = 1'-0"

NORTH ROOF TRELLIS (ABOVE 2ND FLOOR DECK) | 2

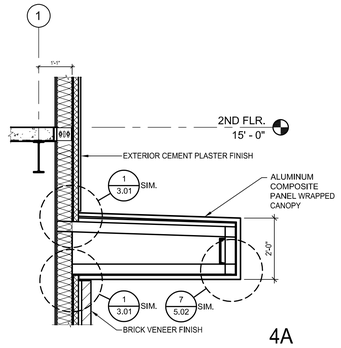

4A

SUNSHADE @ WEST WALL | 4

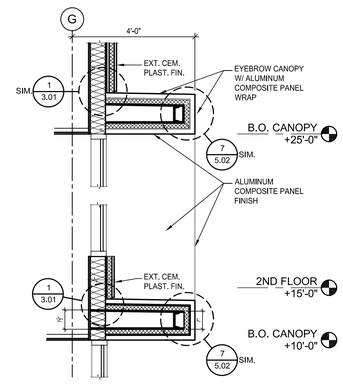

WALL SECT. 5A

EYEBROW CANOPY @ SOUTH WALL | 5

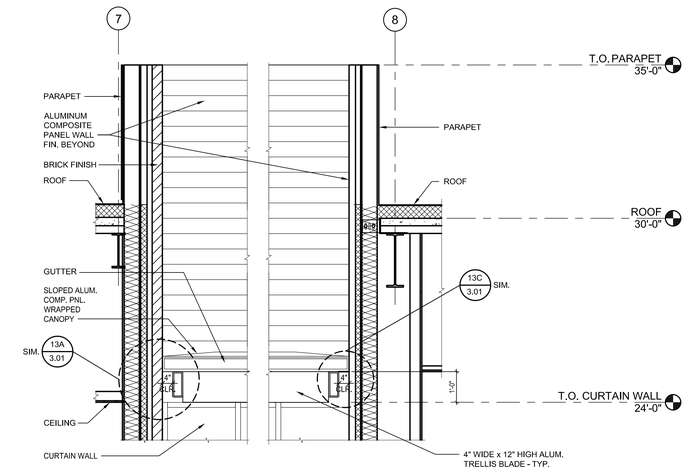

6C CANOPY & TRELLIS SECTION
SCALE: ¾" = 1'-0"

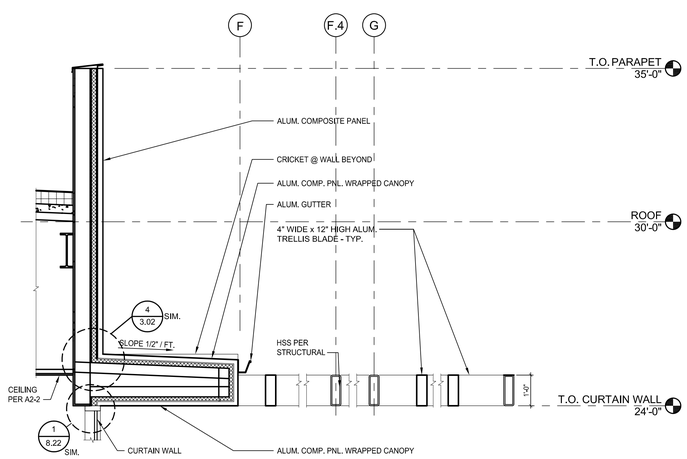

6B CANOPY & TRELLIS SECTION
SCALE: ¾" = 1'-0"

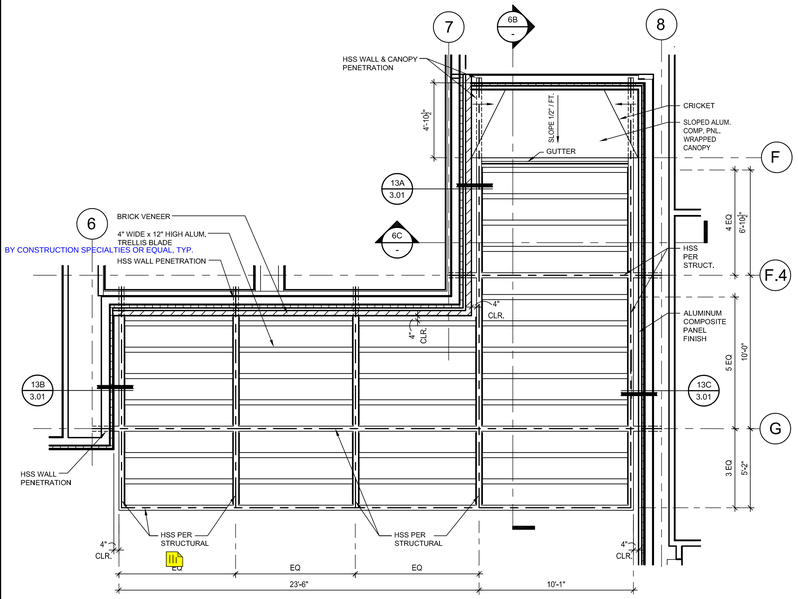

NOTE: TRELLIS CONTRACTOR TO FIELD VERIFY DIMENSIONS PRIOR TO PREPARING TRELLIS SHOP DRAWINGS AND INSTALLATION.

6A ENLARGED TRELLIS PLAN
SCALE: 1/4" = 1'-0"

SOUTH ROOF TRELLIS (ABOVE MAIN ENTRY) | 6

IDENTIFICATION STAMP
DIV. OF THE STATE ARCHITECT
APP. 03-119458 INC:
REVIEWED FOR
SS ☑ FLS ☑ ACS ☑
DATE:05/23/2019

DIVISION OF STATE ARCHITECT
355 South Grand Avenue, Suite 2100
Los Angeles, California. 90012
ph: (213) 897-3995 Fax: (213) 897-3159
agency

tBP architecture planning interiors

LICENSED ARCHITECT
JOSEPH WATSON
No. C25509
REN. 7-31-19
STATE OF CALIFORNIA

tBP/Architecture
4611 Teller Avenue
Newport Beach, CA 92660
ph: 949.673.0300 fx: 949.732.3885
architect

consultant

COMPTON COLLEGE
INSTRUCTIONAL BUILDING No. 2
COMPTON COMMUNITY COLLEGE DISTRICT
1111 E. ARTESIA BLVD. COMPTON, CA.
owner

tBP project number : 20998.00
file name: DTL-0703.dwg
drawn by: ? checked by:
date: 04/08/2019

Rev:	date:	description:

THIS DRAWING AND THE DESIGNS, DEPICTIONS, IDEAS AND OTHER INFORMATION CONTAINED HEREIN CONSTITUTE UNPUBLISHED WORK OF tBP/ARCHITECTURE AND SHALL REMAIN THE PROPERTY OF tBP/ARCHITECTURE. IT IS PROTECTED BY LAW. THEREOF SHALL BE REPRODUCED, DISCLOSED, DISTRIBUTED, SOLD, PUBLISHED OR OTHERWISE USED IN ANY WAY WITHOUT THE ADVANCED EXPRESS WRITTEN CONSENT OF tBP/ARCHITECTURE.

drawing title:
ROOF DETAILS

drawing no.:
7.03
drawing of

DOOR SCHEDULE

*FINAL ROOM NUMBERS AND NAMES FOR SIGNAGE ARE TO BE COORDINATED WITH THE COLLEGE

DOOR NO.	WIDTH	HEIGHT	TYPE	DOOR			FRAME			DETAILS				ASSEMBLY FIRE RATING	REMARKS	SIGNAGE	
				MATERIAL	FINISH	COLOR	MATERIAL	FINISH	COLOR	HEAD	TRANSOM	JAMB	THRESHHOLD			TEXT*	DETAIL
Exterior																	
001	6' - 0"	7' - 0"	Ap	AL-GLS	F		ALUM	F		7/8.22		12/8.22	19/8.10		CARD READER, PANIC HARDWARE	INSTRUCTIONAL BUILDING 2 / EXIT	11/11.01, 9/11.01
002	3' - 6"	7' - 0"	B	H.M.	PSG		H.M.	PSG		2/8.11	1/8.10	8/8.10	20/8.10		CARD READER, PANIC HARDWARE	HUMANITY LAB COMPUTER 2 / EXIT	11/11.01, 9/11.01
003	6' - 0"	7' - 0"	Ap	AL-GLS	F		ALUM	F		7/8.22		12/8.22	19/8.10		CARD READER, PANIC HARDWARE	INSTRUCTIONAL BUILDING 2 / EXIT	11/11.01, 9/11.01
004	3' - 0"	6' - 11"	C	H.M.	PSG		H.M.	PSG		3/8.10		8/8.10	20/8.10		PANIC HARDWARE, *ADJUST DOOR HEIGHT FOR DOOR FRAME TO BE ALIGNED WITH BRICK WALL (VERIFY IN FIELD)	ELECTRICAL ROOM / EXIT	11/11.01, 9/11.01
005	3' - 0"	7' - 0"	C	H.M.	PSG		H.M.	PSG		3/8.10		8/8.10	20/8.10		CARD READER	FIRE RISER	11/11.01, 16/11.01
006	6' - 4"	7' - 0"	Cp	H.M.	PSG		H.M.	PSG		3/8.10		8/8.10	20/8.10		CARD READER, PANIC HARDWARE, ACOUSTIC DOOR STC 65	EXIT ONLY / EXIT	11/11.01, 9/11.01
007	3' - 0"	7' - 0"	C	H.M.	PSG		H.M.	PSG		3/8.10		8/8.10	20/8.10			EXIT ONLY / EXIT	11/11.01, 9/11.01
008	3' - 0"	7' - 0"	A	AL-GLS	F		ALUM	F		8/8.20	3/8.20	7 & 17/8.20	19/8.10				
009	6' - 0"	7' - 0"	Ap	AL-GLS	F		ALUM	F		8/8.20	3/8.20	7/8.20	19/8.10		CARD READER, PANIC HARDWARE	INSTRUCTIONAL BUILDING 2 / EXIT	11/11.01, 9/11.01
010	5' - 8"	7' - 0"	Ap	AL-GLS	F		ALUM	F		8/8.20	2/8.20	12/8.20	19/8.10		CARD READER, PANIC HARDWARE	INSTRUCTIONAL BUILDING 2 / EXIT	11/11.01, 9/11.01
011	6' - 0"	7' - 0"	Ap	AL-GLS	F		ALUM	F		8/8.20	2/8.20	7/8.20	19/8.10		CARD READER, PANIC HARDWARE	INSTRUCTIONAL BUILDING 2 / EXIT	11/11.01, 9/11.01
G01	3' - 0"	7' - 0"	D	GALVANIZED STEEL													
Interior																	
104	3' - 0"	7' - 0"	C	SCP	PSG		H.M.	PSG		9/8.10		9/8.10	STONE			RESTROOM	6 & 7/11.01
107	3' - 0"	7' - 0"	C	SCP	PSG		H.M.	PSG		10/8.10		10/8.10			CARD READER	ELEVATOR MACHINE ROOM	11/11.01
108	3' - 0"	7' - 0"	C	SCP	PSG		H.M.	PSG		10/8.10		10/8.10			CARD READER	DATA	11/11.01
111	3' - 0"	7' - 0"	C	SCP	PSG		H.M.	PSG		9/8.10		9/8.10	STONE			RESTROOM MEN	2 & 4/11.01
112	3' - 0"	7' - 0"	C	SCP	PSG		H.M.	PSG		9/8.10 SIM.		9/8.10 SIM.	STONE			RESTROOM WOMEN	1 & 3/11.01
113	3' - 0"	7' - 0"	B	H.M.	PSG		H.M.	PSG		10/8.10	2/8.11	10/8.10	METAL			JANITOR	11/11.01
120A	3' - 0"	7' - 0"	B	SCN	F	WD-1	H.M.	PSG		10/8.10	2/8.11	10/8.10			CARD READER, PANIC HARDWARE	HUMANITY LAB COMPUTER 1 / EXIT ROUTE	11/11.01, 8/11.01
120B	3' - 0"	7' - 0"	B	SCN	F	WD-1	H.M.	PSG		10/8.10	2/8.11	10/8.10			CARD READER, PANIC HARDWARE	HUMANITY LAB COMPUTER 1 / EXIT ROUTE	11/11.01, 8/11.01
121	3' - 0"	7' - 0"	B	SCN	F	WD-1	SCP	PSG		12/8.10		12/8.10			CARD READER, PANIC HARDWARE, ACOUSTIC DOOR STC 65	AUDIO/VISUAL / EXIT ROUTE	11/11.01, 8/11.01
122	3' - 0"	7' - 0"	C	SCP	PSG	WD-1	SCP	PSG		12/8.10		12/8.10			CARD READER, ACOUSTIC DOOR STC 65	STORAGE	11/11.01
123	3' - 0"	7' - 0"	B	SCN	F	WD-1	H.M.	PSG		10/8.10	2/8.11	10/8.10			CARD READER	VERIFY W/ OWNER	10/11.01
124	3' - 0"	7' - 0"	B	SCN	F	WD-1	H.M.	PSG		10/8.10	2/8.11	10/8.10			CARD READER	LOUNGE	11/11.01
125	3' - 0"	7' - 0"	B	SCN	F	WD-1	H.M.	PSG		10/8.10	2/8.11	10/8.10			CARD READER, PANIC HARDWARE	HUMANITY LAB / EXIT ROUTE	11/11.01, 8/11.01
126	3' - 0"	7' - 0"	B	SCN	F	WD-1	H.M.	PSG		10/8.10	2/8.11	10/8.10			CARD READER	MEETING ROOM / EXIT ROUTE	11/11.01, 8/11.01
126A	3' - 0"	7' - 0"	B	SCN	F	WD-1	H.M.	PSG		10/8.10	2/8.11	10/8.10			CARD READER, PANIC HARDWARE	CLASSROOM / EXIT ROUTE	11/11.01, 8/11.01
126B	3' - 0"	7' - 0"	B	SCN	F	WD-1	H.M.	PSG		10/8.10	2/8.11	10/8.10			CARD READER, PANIC HARDWARE	CLASSROOM / EXIT ROUTE	11/11.01, 8/11.01
127A	3' - 0"	7' - 0"	B	SCN	F	WD-1	H.M.	PSG		10/8.10	2/8.11	10/8.10			CARD READER, PANIC HARDWARE	CLASSROOM / EXIT ROUTE	11/11.01, 8/11.01
127B	3' - 0"	7' - 0"	B	SCN	F	WD-1	H.M.	PSG		10/8.10	2/8.11	10/8.10			CARD READER, PANIC HARDWARE	CLASSROOM / EXIT ROUTE	11/11.01, 8/11.01
128A	3' - 0"	7' - 0"	B	SCN	F	WD-1	H.M.	PSG		10/8.10	2/8.11	10/8.10			CARD READER, PANIC HARDWARE	CLASSROOM / EXIT ROUTE	11/11.01, 8/11.01
128B	3' - 0"	7' - 0"	B	SCN	F	WD-1	H.M.	PSG		10/8.10	2/8.11	10/8.10			CARD READER, PANIC HARDWARE	CLASSROOM / EXIT ROUTE	11/11.01, 8/11.01
129A	3' - 0"	7' - 0"	B	SCN	F	WD-1	H.M.	PSG		10/8.10	2/8.11	10/8.10			CARD READER, PANIC HARDWARE	MEETING ROOM / EXIT ROUTE	11/11.01, 8/11.01
129B	3' - 0"	7' - 0"	B	SCN	F	WD-1	H.M.	PSG		10/8.10	2/8.11	10/8.10			CARD READER, PANIC HARDWARE	MEETING ROOM / EXIT ROUTE	11/11.01, 8/11.01
130	3' - 0"	7' - 0"	B	SCN	F	WD-1	H.M.	PSG		10/8.10	2/8.11	10/8.10			CARD READER, PANIC HARDWARE	HUMANITY LAB COMPUTER 2 / EXIT ROUTE	11/11.01, 8/11.01
131	3' - 0"	7' - 0"	B	SCN	F	WD-1	H.M.	PSG		10/8.10	2/8.11	10/8.10			CARD READER	READ/STUDY / EXIT ROUTE	11/11.01, 8/11.01
140	3' - 0"	7' - 0"	B	SCN	F	WD-1	H.M.	PSG		10/8.10	2/8.11	10/8.10			CARD READER	WAITING / EXIT ROUTE	11/11.01, 8/11.01
142	3' - 6"	7' - 0"	D	SCN	F	WD-1	ALUM	F							SLIDING DOOR, SEE DTL. 4/8.11	VERIFY W/ OWNER	10/11.01
143	3' - 0"	7' - 0"	B	SCN	F	WD-1	H.M.	PSG		10/8.10	2/8.11	10/8.10				VERIFY W/ OWNER	10/11.01
144	3' - 0"	7' - 0"	B	SCN	F	WD-1	H.M.	PSG		10/8.10	2/8.11	10/8.10				VERIFY W/ OWNER	10/11.01
145A	3' - 0"	7' - 0"	B	SCN	F	WD-1	H.M.	PSG		10/8.10	2/8.11	10/8.10			CARD READER	MEETING ROOM / EXIT ROUTE	11/11.01, 8/11.01
145B	3' - 0"	7' - 0"	B	SCN	F	WD-1	H.M.	PSG		10/8.10	2/8.11	10/8.10			CARD READER	MEETING ROOM	11/11.01
201	3' - 0"	7' - 0"	C	SCP	PSG		H.M.	PSG		10/8.10		10/8.10			CARD READER	LACTATION ROOM	11/11.01
205	3' - 0"	7' - 0"	C	SCP	PSG		H.M.	PSG		10/8.10		10/8.10	STONE		CARD READER	RESTROOM	6 & 7/11.01
207	3' - 0"	7' - 0"	C	SCP	PSG		H.M.	PSG		10/8.10		10/8.10			CARD READER	DATA	11/11.01
208	3' - 0"	7' - 0"	C	SCP	PSG		H.M.	PSG		10/8.10		10/8.10			CARD READER	ELECTRICAL ROOM	11/11.01
209	3' - 0"	7' - 0"	C	SCP	PSG		H.M.	PSG		10/8.10		10/8.10	METAL		CARD READER	JANITOR	11/11.01
211	3' - 0"	7' - 0"	C	SCP	PSG		H.M.	PSG		10/8.10		10/8.10	STONE			RESTROOM MEN	2 & 4/11.01
212	3' - 0"	7' - 0"	C	SCP	PSG		H.M.	PSG		10/8.10		10/8.10	STONE			RESTROOM WOMEN	1 & 3/11.01
220A	3' - 0"	7' - 0"	B	SCN	F		H.M.	PSG		10/8.10	2/8.11	10/8.10			CARD READER, PANIC HARDWARE	MEETING ROOM / EXIT ROUTE	11/11.01, 8/11.01
220B	3' - 0"	7' - 0"	B	SCN	F		H.M.	PSG		10/8.10	2/8.11	10/8.10			CARD READER, PANIC HARDWARE	MEETING ROOM / EXIT ROUTE	11/11.01, 8/11.01
221A	3' - 0"	7' - 0"	B	SCN	F		H.M.	PSG		10/8.10	2/8.11	10/8.10			CARD READER, PANIC HARDWARE	CLASSROOM / EXIT ROUTE	11/11.01, 8/11.01
221B	3' - 0"	7' - 0"	B	SCN	F		H.M.	PSG		10/8.10	2/8.11	10/8.10			CARD READER, PANIC HARDWARE	CLASSROOM / EXIT ROUTE	11/11.01, 8/11.01
222A	3' - 0"	7' - 0"	B	SCN	F		H.M.	PSG		10/8.10	2/8.11	10/8.10			CARD READER, PANIC HARDWARE	CLASSROOM / EXIT ROUTE	11/11.01, 8/11.01
222B	3' - 0"	7' - 0"	B	SCN	F		H.M.	PSG		10/8.10	2/8.11	10/8.10			CARD READER, PANIC HARDWARE	CLASSROOM / EXIT ROUTE	11/11.01, 8/11.01
223A	3' - 0"	7' - 0"	B	SCN	F		H.M.	PSG		10/8.10	2/8.11	10/8.10			CARD READER, PANIC HARDWARE	CLASSROOM / EXIT ROUTE	11/11.01, 8/11.01
223B	3' - 0"	7' - 0"	B	SCN	F		H.M.	PSG		10/8.10	2/8.11	10/8.10			CARD READER, PANIC HARDWARE	CLASSROOM / EXIT ROUTE	11/11.01, 8/11.01
224A	3' - 0"	7' - 0"	B	SCN	F		H.M.	PSG		10/8.10	2/8.11	10/8.10			CARD READER, PANIC HARDWARE	CLASSROOM / EXIT ROUTE	11/11.01, 8/11.01
224B	3' - 0"	7' - 0"	B	SCN	F		H.M.	PSG		10/8.10	2/8.11	10/8.10			CARD READER, PANIC HARDWARE	CLASSROOM / EXIT ROUTE	11/11.01, 8/11.01
225A	3' - 0"	7' - 0"	B	SCN	F		H.M.	PSG		10/8.10	2/8.11	10/8.10			CARD READER, PANIC HARDWARE	CLASSROOM / EXIT ROUTE	11/11.01, 8/11.01
225B	3' - 0"	7' - 0"	B	SCN	F		H.M.	PSG		10/8.10	2/8.11	10/8.10			CARD READER, PANIC HARDWARE	CLASSROOM / EXIT ROUTE	11/11.01, 8/11.01
226A	3' - 0"	7' - 0"	B	SCN	F		H.M.	PSG		10/8.10	2/8.11	10/8.10			CARD READER, PANIC HARDWARE	STUDY - COMPUTERS / EXIT ROUTE	11/11.01, 8/11.01
226B	3' - 0"	7' - 0"	B	SCN	F		H.M.	PSG		10/8.10	2/8.11	10/8.10			CARD READER, PANIC HARDWARE	STUDY - COMPUTERS / EXIT ROUTE	11/11.01, 8/11.01
230	3' - 0"	7' - 0"	B	SCN	F		H.M.	PSG		10/8.10	2/8.11	10/8.10			CARD READER	LOUNGE	11/11.01
231	3' - 6"	7' - 0"	D	SCN	F	WD-1	ALUM	F							CARD READER / SLIDING DOOR, SEE DTL. 4/8.11	VERIFY W/ OWNER	10/11.01
232	3' - 6"	7' - 0"	D	SCN	F	WD-1	ALUM	F							CARD READER / SLIDING DOOR, SEE DTL. 4/8.11	VERIFY W/ OWNER	10/11.01
233	3' - 0"	7' - 0"	B	SCN	F	WD-1	H.M.	PSG		10/8.10	2/8.11	10/8.10			CARD READER	VERIFY W/ OWNER	10/11.01
234	3' - 6"	7' - 0"	D	SCN	F	WD-1	ALUM	F							CARD READER / SLIDING DOOR, SEE DTL. 4/8.11	VERIFY W/ OWNER	10/11.01
235	3' - 6"	7' - 0"	D	SCN	F	WD-1	ALUM	F							CARD READER / SLIDING DOOR, SEE DTL. 4/8.11	VERIFY W/ OWNER	10/11.01
236	3' - 6"	7' - 0"	D	SCN	F	WD-1	ALUM	F							CARD READER / SLIDING DOOR, SEE DTL. 4/8.11	VERIFY W/ OWNER	10/11.01
237	3' - 6"	7' - 0"	D	SCN	F	WD-1	ALUM	F							CARD READER / SLIDING DOOR, SEE DTL. 4/8.11	VERIFY W/ OWNER	10/11.01
238	3' - 6"	7' - 0"	D	SCN	F	WD-1	ALUM	F							CARD READER / SLIDING DOOR, SEE DTL. 4/8.11	VERIFY W/ OWNER	10/11.01
239	3' - 6"	7' - 0"	D	SCN	F	WD-1	ALUM	F							CARD READER / SLIDING DOOR, SEE DTL. 4/8.11	VERIFY W/ OWNER	10/11.01

NOTE:
FOR ADDITIONAL HARDWARE AT EXISTING DOORS SEE 1/AS-3
FOR ADDITIONAL GATES HARDWARE SEE SITE PLAN AND GATE DETAILS ON SHEET 2.01

4/10/2019 3:29:38 PM

DOOR

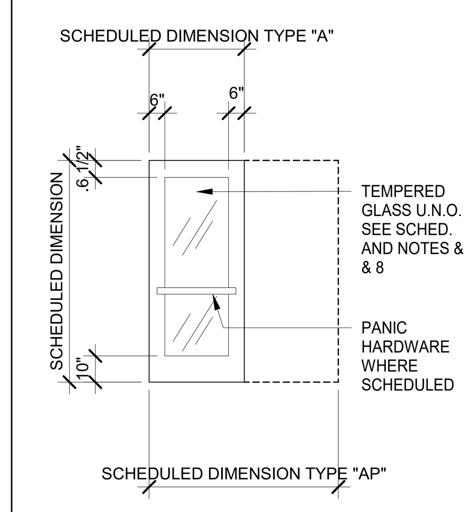

DOOR TYPE A

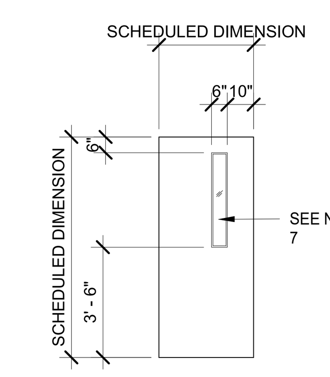

DOOR TYPE B

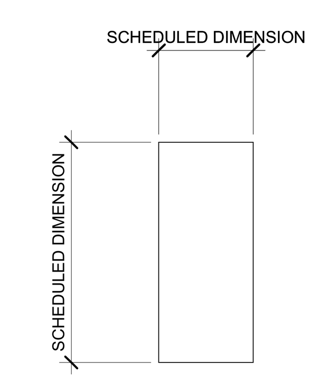

DOOR TYPE C

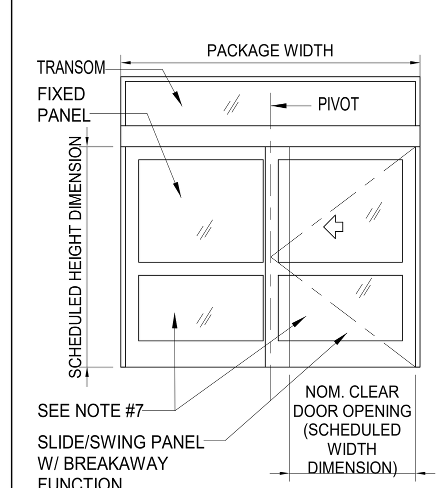

DOOR TYPE D

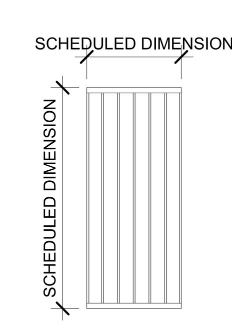

GATE TYPE G

NOTE

1. DOORS SHALL BE 1-3/4" THICK UNLESS NOTED OTHERWISE.
2. THE LETTER 'P' FOLLOWING THE 'DOOR TYPE' DESIGNATION IN THE DOOR SCHEDULE INDICATES PAIR OF DOORS. BOTH LEAVES ARE THE SAME SIZE, UNLESS NOTED OTHERWISE.
3. THE LETTER 'X' FOLLOWING THE 'DOOR TYPE' LETTER IN THE DOOR SCHEDULE INDICATES A FIXED PANEL ABOVE DOOR LEAF. SCHEDULE DIMENSION INCLUDES PANEL, UNLESS NOTED OTHERWISE.
4. FIXED PANELS SHALL BE OF THE SAME MATERIAL, CONSTRUCTION AND THICKNESS AS DOOR LEAF, AND SHALL BE PROVIDED BY THE SAME MANUFACTURER, UNLESS NOTED OTHERWISE.
5. THE LETTER 'L' FOLLOWING 'DOOR TYPE' DESIGNATION IN THE DOOR SCHEDULE INDICATES DOORS WITH LOUVERS. SEE DOOR TYPE FOR SIZE OF LOUVER.
6. LOUVERS IN EXTERIOR DOORS SHALL BE VANDAL-PROOF, SECURITY TYPE.
7. SEE REMARKS SECTION OF DOOR SCHEDULE FOR GLASS TYPES.
8. EXTERIOR DOOR REQUIREMENTS:

   ALL EXTERIOR DOORS IN BUILDINGS, INCLUDING, BUT NOT LIMITED TO DOORS OF TOILETS AND STORAGE ROOMS, SHALL CONFORM WITH THE REQUIREMENTS OF THE LATEST EDITION OF THE CALIFORNIA BUILDING CODE.

   a. EXIT DOOR SHALL BE OPERABLE FROM THE INSIDE WITHOUT THE USE OF A KEY OR ANY SPECIAL KNOWLEDGE OR EFFORT.

   b. HAND ACTIVATED DOOR OPENING HARDWARE SHALL BE CENTERED BETWEEN 34" AND 44" ABOVE FINISH FLOOR.

   c. DEAD BOLTS ARE NOT PERMITTED UNLESS OPERABLE WITH A SINGLE EFFORT LEVER TYPE HARDWARE.

   d. ALL ROOMS SERVING AN OCCUPANCY LOAD OF 50 OR GREATER AND DOORS LOCATED ON THE DISCHARGE OF EXIT CORRIDORS ARE REQUIRED TO BE PROVIDED WITH PANIC HARDWARE (CBC 1010.1.10).

   e. ALL FIRE DOOR LABELS SHALL COMPLY WITH CBC 715.4.6

9. FIRE ASSEMBLIES REQUIRED TO HAVE A ONE-HOUR FIRE-PROTECTION RATING SHALL BE EITHER AUTOMATIC OR SELF-CLOSING FIRE ASSEMBLIES TO BE ACTIVATED BY AN INCREASE IN TEMPERATURE SHALL HAVE HEAT-ACTIVATING DEVICES INSTALLED ON EACH SIDE OF THE WALL AT THE CEILING HEIGHT WHERE THE CEILING IS MORE THAN 3 FEET ABOVE THE TOP OF THE OPENING OR BY A SINGLE FUSSIBLE LINK IN THE OPENING INCORPORATED IN THE CLOSING DEVICE.
10. ALL FIRE-RESISTIVE ASSEMBLIES FOR PROTECTED OPENING SHOULD COMPLY WITH SECTION 713 CBC.
11. SEE SPECIFICATION SECTION 08 71 00 FOR DOOR HARDWARE INDEX AND DOOR HARDWARE SETS.
12. PROVIDE TOP-MOUNTED CLOSERS.
13. PROVIDE CARD READERS AT ALL EXTERIOR DOORS.SEE DETAIL 18/8.10
14. PROVIDE ASSA ABLOY HIGH SECURITY LOCKS / KEYS.

ABBREVIATIONS

AFP	ACCORDION TYPE PARTITION
ALUM	ALUMINUM
AS	ACID STAIN
ATFD	ACCORDION TYPE FIRE DOOR
DEM PART	DEMOUNTABLE PARTITION
(E)	EXISTING
EP	EPOXY PAINT
F	FACTORY FINISH
FFD	FOLDING FABRIC DOOR
FFP	FOLDING PANEL PARTITION
FFWD	FOLDING PANEL WOOD DOOR
GL	GLASS
HCN	HOLLOW CORE NATURAL FINISH
HCP	HOLLOW CORE PAINT FINISH
HM	HOLLOW METAL
LAQ	LACQUER FINISH
MCN	MINERAL CORE NATURAL FINISH
MCP	MINERAL CORE PAINT FINISH
PE	PAINT EGGSHELL
PF	PAINT FLAT
PG	PAINT GLOSS
PSG	PAINT SEMI-GLOSS
S.	SEAL
SCN	SOLID CORE NATURAL FINISH
SCP	SOLID CORE PAINT FINISH
SCPL	SOLID CORE PLASTIC LAMINATE
STN	STAIN FINISH
SST	STAINLESS STEEL
STL	STL
UG	UNGLAZED
VF	VARNISH FINISH
W	WAX

IDENTIFICATION STAMP
DIV. OF THE STATE ARCHITECT
APP. 03-119458 INC:
REVIEWED FOR
SS ☑ FLS ☑ ACS ☑
DATE:05/23/2019

DIVISION OF THE STATE ARCHITECT
355 South Grand Avenue, Suite 2100
Los Angeles, CA 90012
ph: (213) 897-3995 fx:(213) 897-3159

agency

tBP architecture planning interiors

LICENSED ARCHITECT GARY PAIGE MOON NO. C25409 REN. 7-31-19 STATE OF CALIFORNIA

tBP/Architecture
4611 Teller Avenue
Newport Beach, CA 92660
ph: 949.673.0300 fx: 949.732.3895

architect

consultant

COMPTON COLLEGE
INSTRUCTIONAL BUILDING No.2

COMPTON COMMUNITY COLLEGE DISTRICT
1111 E. ARTESIA BLVD. COMPTON, CA.

owner

tBP project number: 20998.00
file name:
drawn by: checked by:
date: 04/08/2019
rev: date: description:

THIS DRAWING AND THE DESIGNS, DEPICTIONS, IDEAS AND OTHER INFORMATION CONTAINED HEREIN CONSTITUTE UNPUBLISHED WORK OF tBP/ARCHITECTURE AND SHALL REMAIN PROPERTY OF tBP/ARCHITECTURE IN PERPETUITY. NO PART THEREOF SHALL BE REPRODUCED, DISCLOSED, DISTRIBUTED, SOLD, PUBLISHED OR OTHERWISE USED IN ANY WAY WITHOUT THE ADVANCED EXPRESS WRITTEN CONSENT OF tBP/ARCHITECTURE.

drawing title:
DOOR SCHEDULE

drawing no.:
8.01

drawing of

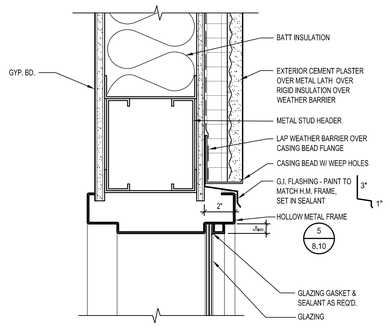

EXTERIOR HEAD @ H.M. TRANSOM — SCALE: 3" = 1'-0" — 1

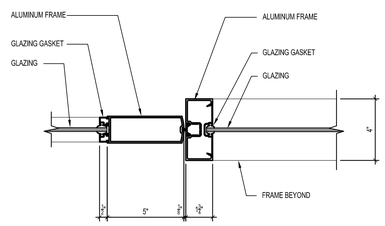

STOREFRONT DOOR HINGE - PLAN — SCALE: 3" = 1'-0" — 2

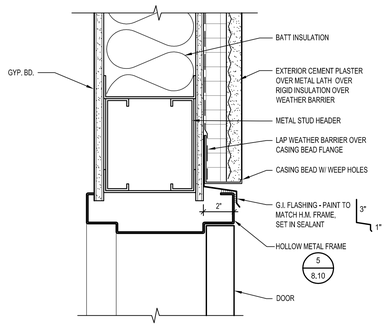

EXTERIOR HEAD @ H.M. DOOR - SECTION — SCALE: 3" = 1'-0" — 3

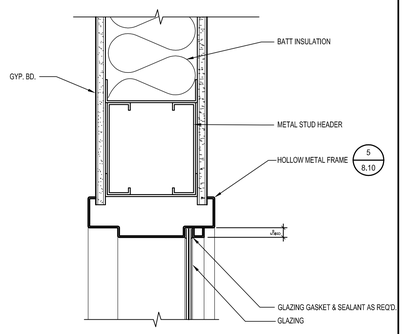

INTERIOR HEAD @ H.M. TRANSOM — SCALE: 3" = 1'-0" — 4

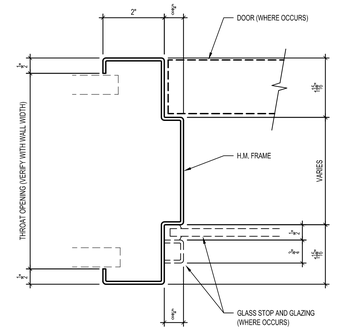

TYPICAL HOLLOW METAL FRAME PROFILE — SCALE: HALF — 5

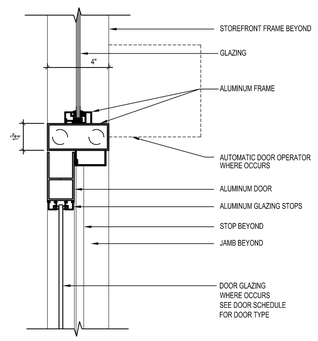

INT. STOREFRONT DOOR HEAD- ALUM DR. — SCALE: 3" = 1'-0" — 6

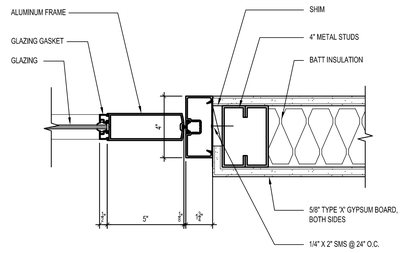

STOREFRONT DOOR HINGE - PLAN — SCALE: 3" = 1'-0" — 7

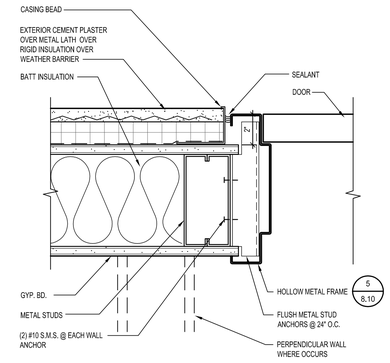

EXTERIOR JAMB DETAIL — SCALE: 3" = 1'-0" — 8

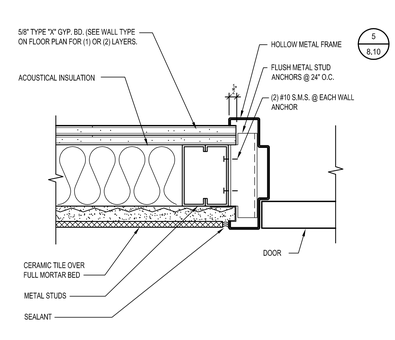

JAMB AT TILE WALL (HEAD SIM.) — SCALE: 3"=1'-0" — 9

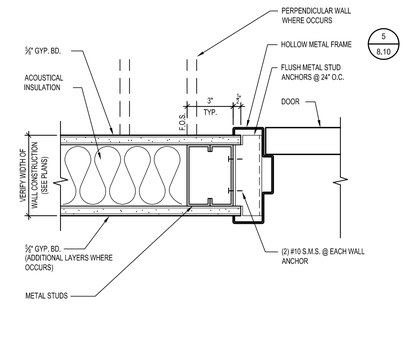

JAMB DETAIL (HEAD SIM.) — SCALE: 3" = 1'-0" — 10

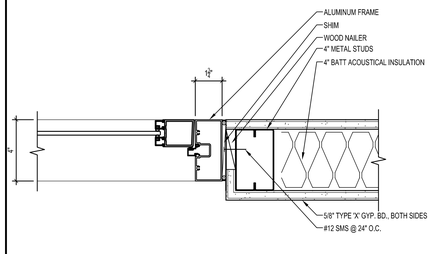

INT. STOREFRONT DOOR JAMB- ALUM DR. — SCALE: 3" = 1'-0" — 11

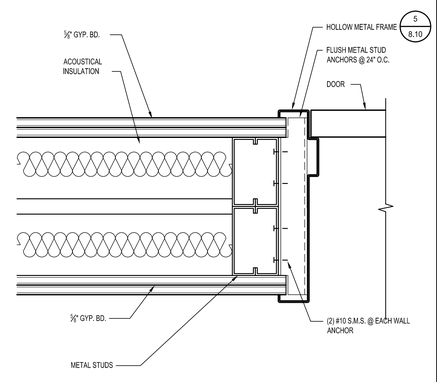

JAMB DETAIL (HEAD SIM.) — SCALE: 3" = 1'-0" — 12

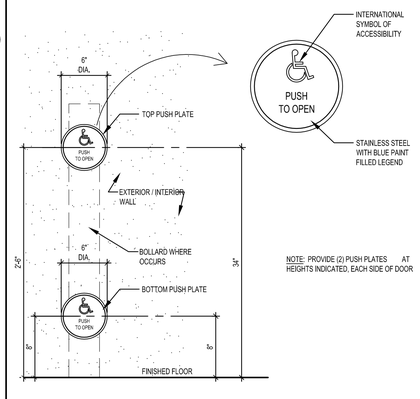

WALL-MOUNTED POWERED DOOR PUSH PLATES — SCALE: 1-1/2" = 1'-0" — 13

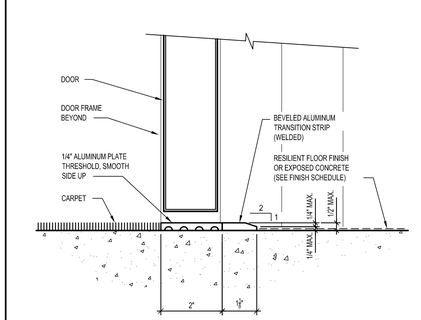

INTERIOR METAL THRESHOLD DETAIL — SCALE: HALF — 14

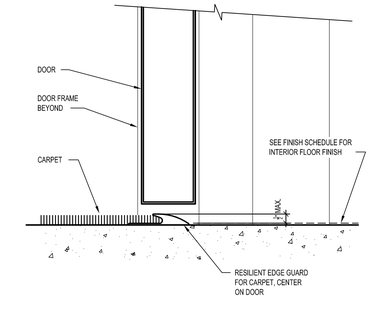

CARPET EDGE THRESHOLD DETAIL — SCALE: HALF — 15

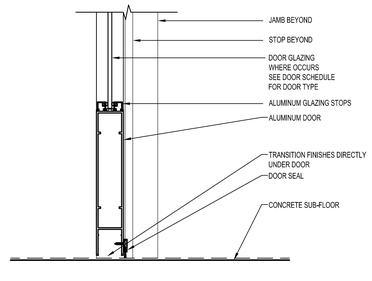

INT. STOREFRONT DOOR THRESHOLD- ALUM DR. — SCALE: 3" = 1'-0" — 16

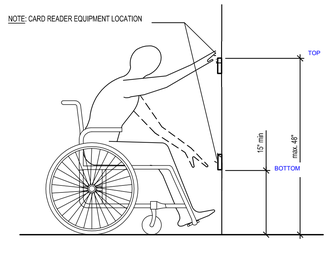

CARD READER HEIGHT LOCATION — SCALE: 3/4" = 1'-0" — 17

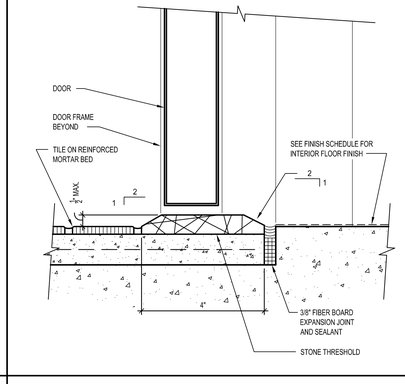

THRESHOLD AT TILE FLOOR — SCALE: HALF — 18

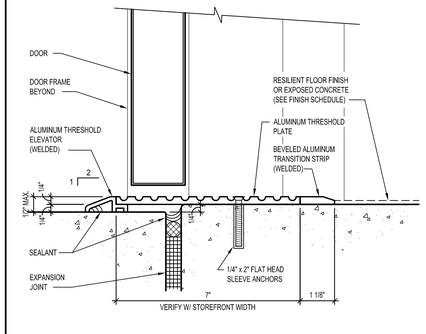

EXTERIOR THRESHOLD DETAIL — SCALE: HALF — 19

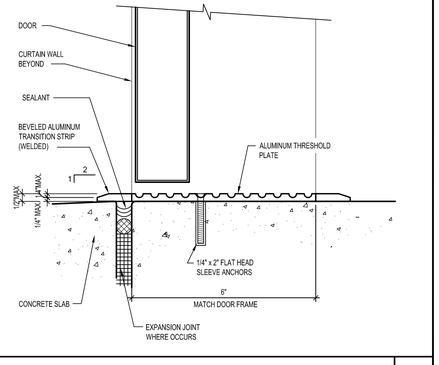

EXTERIOR THRESHOLD DETAIL — SCALE: HALF — 20

IDENTIFICATION STAMP
DIV. OF THE STATE ARCHITECT
APP. 03-119458 INC:
REVIEWED FOR
SS ☑ FLS ☑ ACS ☑
DATE:05/23/2019

DIVISION OF STATE ARCHITECT
355 South Grand Avenue, Suite 2100
Los Angeles, California. 90012
ph: (213) 897-3995 Fax: (213) 897-3159
agency

tBP
architecture
planning
interiors

LICENSED ARCHITECT
JAMES PAIGE KOON
No. C25409
REN. 7-31-13
STATE OF CALIFORNIA

tBP/Architecture
4611 Teller Avenue
Newport Beach, CA 92660
ph: 949.673.0300 fx: 949.732.3895
architect

consultant

COMPTON COLLEGE
INSTRUCTIONAL BUILDING No. 2

COMPTON COMMUNITY COLLEGE DISTRICT
1111 E. ARTESIA BLVD. COMPTON, CA.

owner

tBP project number : 20998.00

file name:

drawn by: checked by:

date: 04/08/2019

Rev:	date:	description:

THIS DRAWING AND THE DESIGNS, DEFINITIONS, IDEAS AND OTHER INFORMATION CONTAINED HEREIN CONSTITUTE UNPUBLISHED WORK OF tBP/ARCHITECTURE AND SHALL REMAIN THE PROPERTY OF tBP/ARCHITECTURE IN PERPETUITY. NO PART THEREOF SHALL BE REPRODUCED, DISCLOSED, DISTRIBUTED, SOLD, PUBLISHED OR OTHERWISE USED IN ANY WAY WITHOUT THE ADVANCED EXPRESS WRITTEN CONSENT OF tBP/ARCHITECTURE.

drawing title:
DOOR DETAILS

drawing no.:
8.10
drawing of

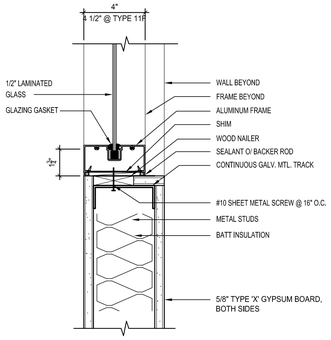

INT. STOREFRONT - SILL/JAMB (SIM) SCALE: 3" = 1'-0" 1

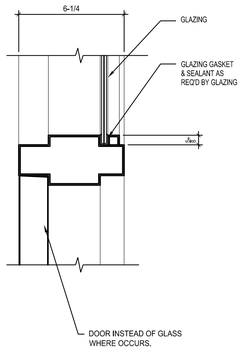

HM. DOOR HEAD WITH TRANSOM SCALE: 3" = 1'-0" 2

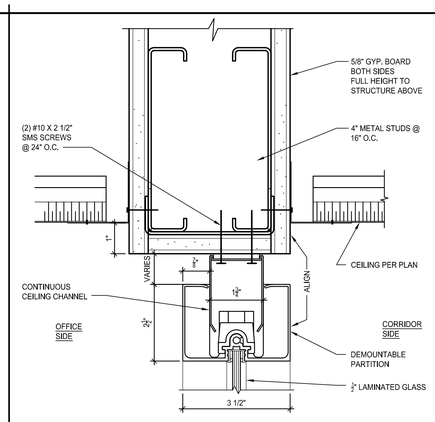

GLASS PANEL - HEAD AT CEILING SCALE: HALF 3

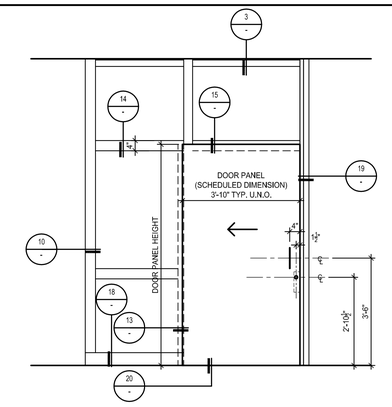

SLIDING DOOR ELEVATION - CORRIDOR SIDE 1 1/2" = 1'-0" 4

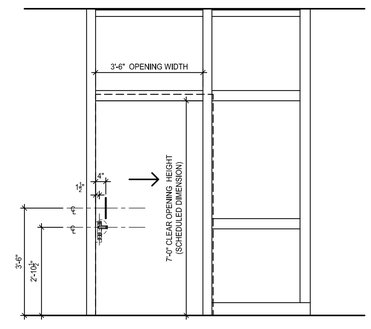

SEE ELEVATION 4 FOR DETAIL REFERENCES

SLIDING DOOR ELEVATION - OFFICE SIDE 1 1/2" = 1'-0" 5

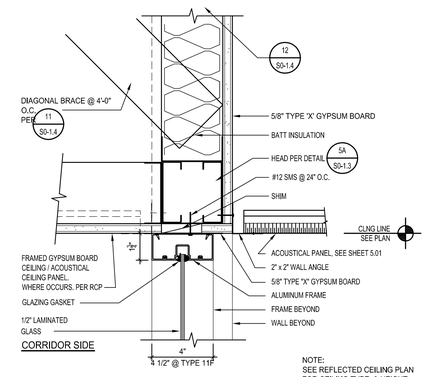

NOTE: SEE REFLECTED CEILING PLAN FOR CEILING TYPE & HEIGHT

INT. STOREFRONT - HEAD AT CEILING SCALE: 3" = 1'-0" 6

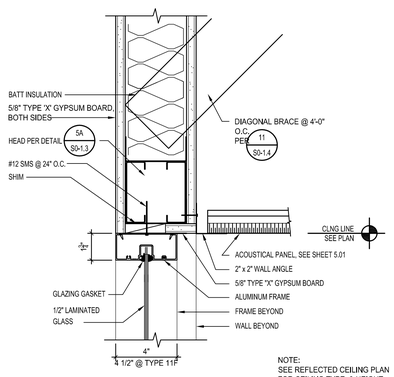

NOTE: SEE REFLECTED CEILING PLAN FOR CEILING TYPE & HEIGHT

INT. STOREFRONT - HEAD SCALE: 3" = 1'-0" 7

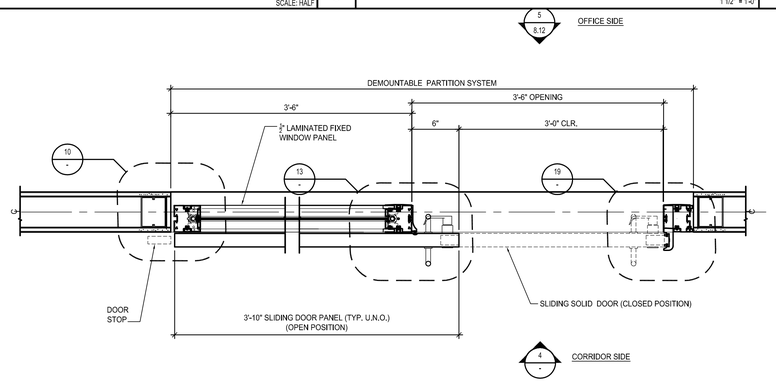

ENLARGED PLAN - TYP. DEMOUNTABLE DOOR WINDOW SYSTEM AT OFFICES SCALE: 1'-0" = 1'-0" 9

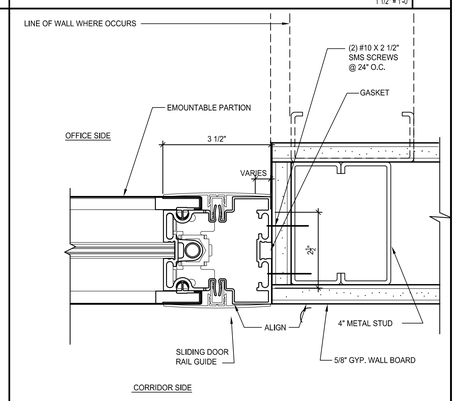

WINDOW PANEL AT STUD WALL SCALE: HALF 10

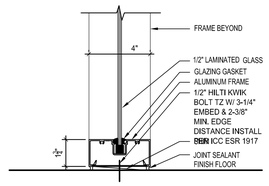

INT. STOREFRONT - SILL SCALE: 3" = 1'-0" 11

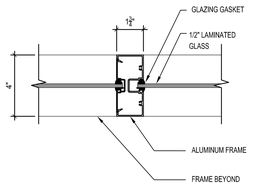

INT. STOREFRONT - VERTICAL/HORIZ. MULLION SCALE: 3" = 1'-0" 12

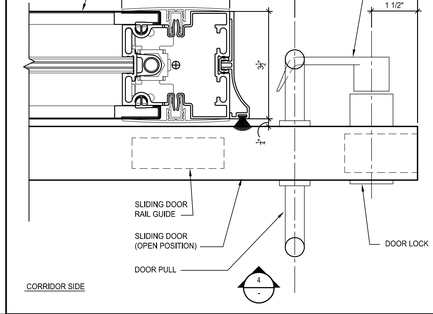

SLIDING DOOR / WALLPOST JAMB SCALE: HALF 13

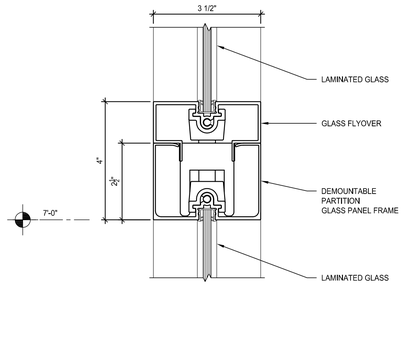

GLASS FLYOVER AT GLASS PANEL SCALE: HALF 14

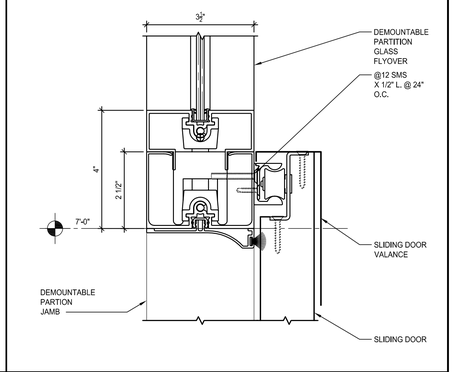

SLIDING DOOR - HEAD SCALE: HALF 15

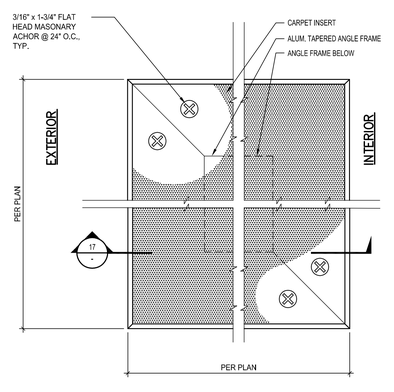

RECESSED FLOOR MAT - PLAN SCALE: FULL 16

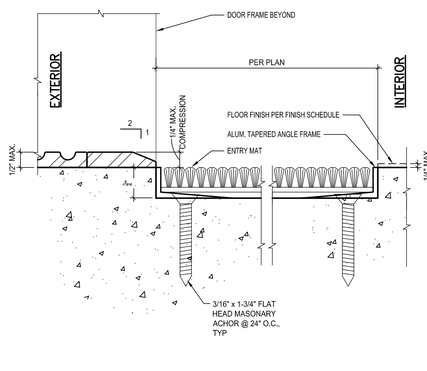

RECESSED FLOOR MAT/THRESHOLD SECTION SCALE: FULL 17

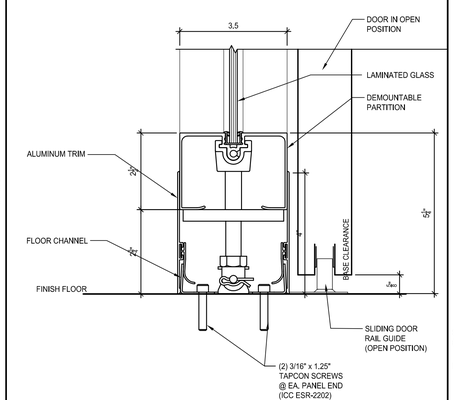

GLASS PANEL - SILL SCALE: HALF 18

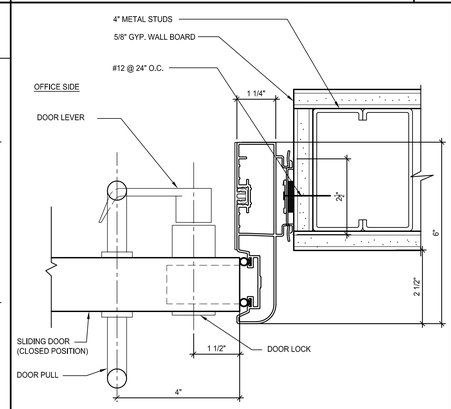

SLIDING DOOR / WALLPOST JAMB SCALE: HALF 19

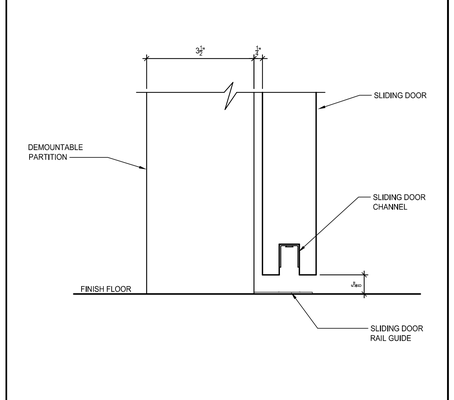

SLIDING DOOR SILL SCALE: HALF 20

IDENTIFICATION STAMP
DIV. OF THE STATE ARCHITECT
APP. 03-119458 INC:
REVIEWED FOR
SS ☑ FLS ☑ ACS ☑
DATE: 05/23/2019

DIVISION OF STATE ARCHITECT
355 South Grand Avenue, Suite 2100
Los Angeles, California. 90012
ph: (213) 897-3995 Fax: (213) 897-3159
agency

tBP
architecture
planning
interiors
LICENSED ARCHITECT
CRAIG FAUSE KOCH
No. C25409
REN. 7-31-13
STATE OF CALIFORNIA
tBP/Architecture
4611 Teller Avenue
Newport Beach, CA 92660
ph: 949.673.0300 fx: 949.732.3895
architect

consultant

COMPTON COLLEGE
INSTRUCTIONAL BUILDING No. 2

COMPTON COMMUNITY COLLEGE DISTRICT
1111 E. ARTESIA BLVD. COMPTON, CA.

owner

tBP project number : 20998.00
file name:
drawn by: checked by:
date: 04/08/2019

Rev:	date:	description:

THIS DRAWING AND THE DESIGNS, SYSTEMS, IDEAS AND OTHER INFORMATION EMBODIED HEREIN CONSTITUTE UNPUBLISHED WORK OF tBP/ARCHITECTURE AND SHALL REMAIN THE PROPERTY OF tBP ARCHITECTURE IN PERPETUITY. NO PART THEREOF SHALL BE REPRODUCED, DISCLOSED, DISTRIBUTED, SOLD, PUBLISHED OR OTHERWISE USED IN ANY WAY WITHOUT THE ADVANCED EXPRESS WRITTEN CONSENT OF tBP/ARCHITECTURE.

drawing title: INTERIOR STORFRONT AND SLIDING DOOR DETAILS

drawing no.: 8.11
drawing of

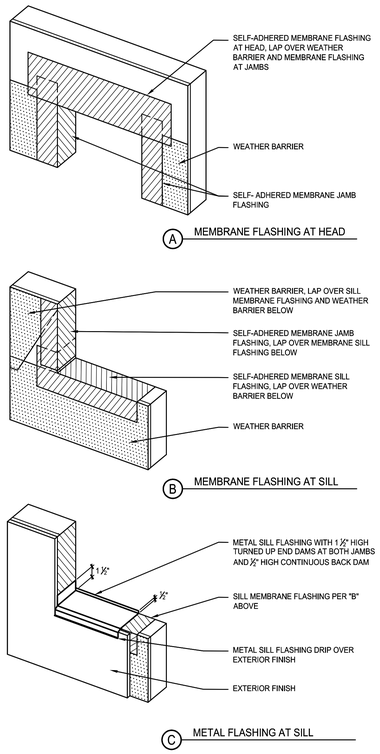

TYPICAL FLASHING AT OPENINGS — SCALE: N.T.S. — 6

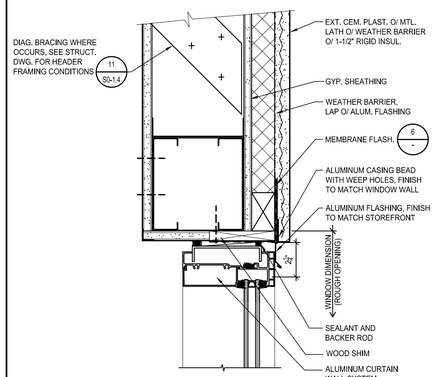

HEAD SECTION - EXTERIOR PLASTER WALL — SCALE: 3" = 1'-0" — 2

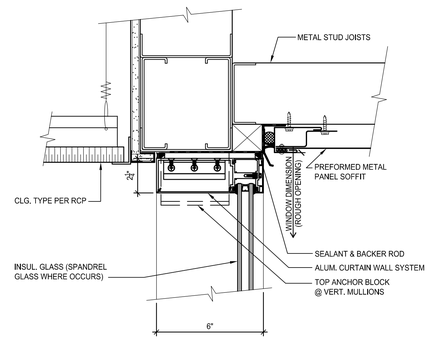

HEAD SECTION - EXTERIOR SOFFIT — SCALE: 3" = 1'-0" — 3

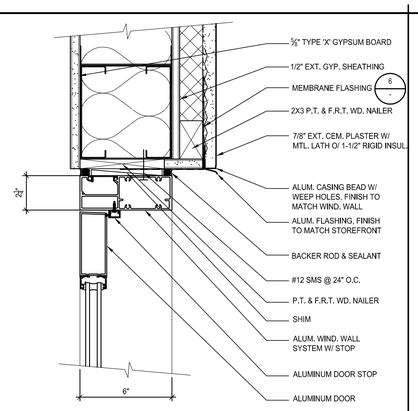

DOOR HEAD SECTION @ EXT. PLASTER WALL — SCALE: 3" = 1'-0" — 4

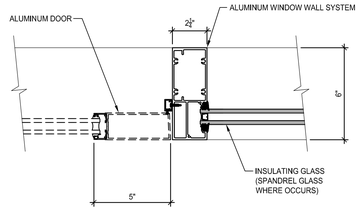

DOOR JAMB — SCALE: 3" = 1'-0" — 7

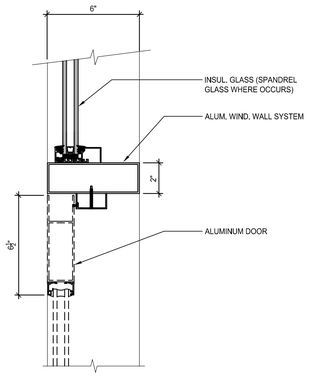

DOOR HEAD WITH TRANSOM — SCALE: 3" = 1'-0" — 8

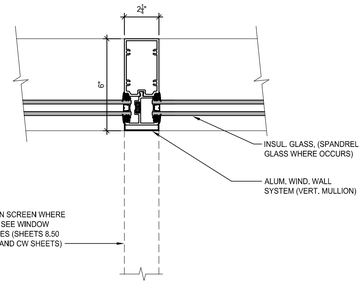

INTERMEDIATE VERTICAL MULLION — SCALE: 3" = 1'-0" — 9

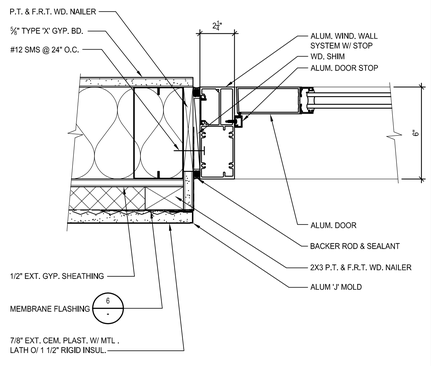

DOOR JAMB - PLAN — SCALE: 3" = 1'-0" — 11

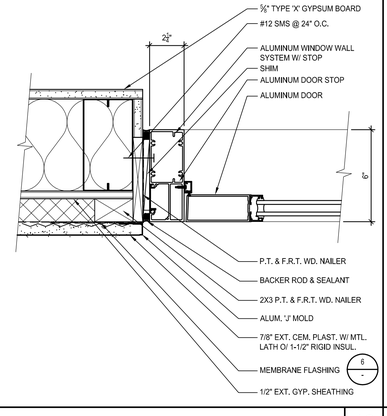

DOOR JAMB - PLAN — SCALE: 3" = 1'-0" — 12

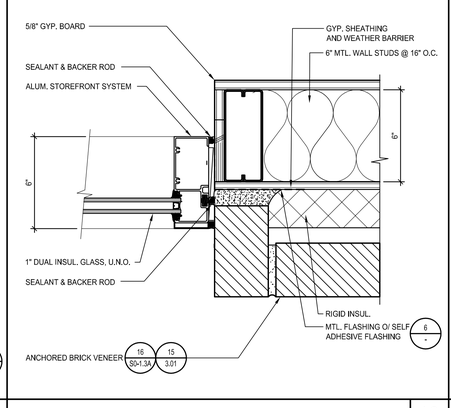

DOOR JAMB - PLAN — SCALE: 3" = 1'-0" — 13

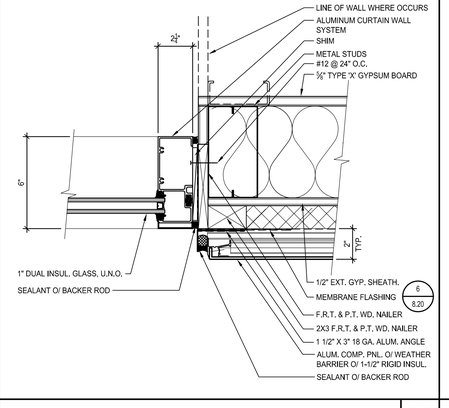

JAMB - PLAN — SCALE: 3" = 1'-0" — 14

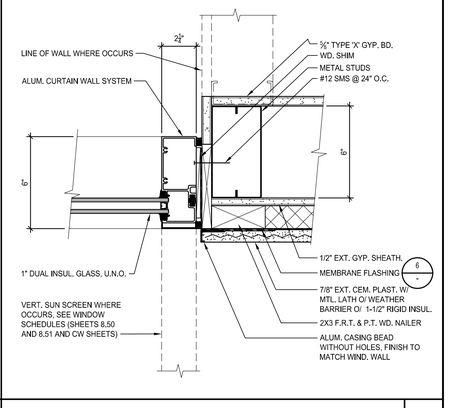

JAMB - PLAN — SCALE: 3" = 1'-0" — 15

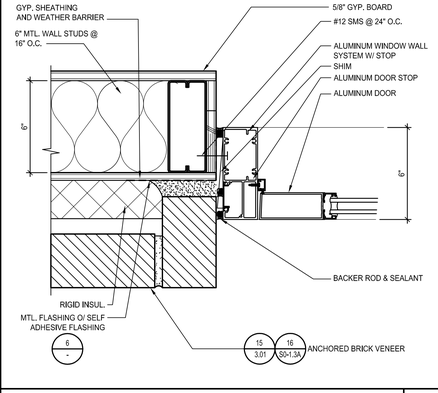

DOOR JAMB - PLAN — SCALE: 3" = 1'-0" — 17

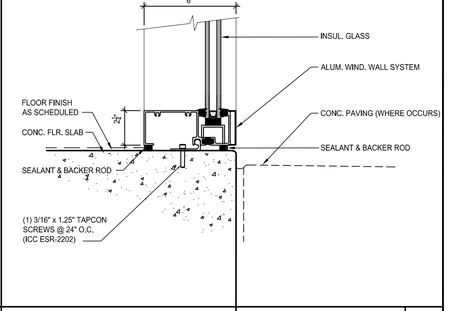

SILL SECTION - SLAB ON GRADE — SCALE: 3" = 1'-0" — 20

IDENTIFICATION STAMP
DIV. OF THE STATE ARCHITECT
APP. 03-119458 INC:
REVIEWED FOR
SS ☑ FLS ☑ ACS ☑
DATE:05/23/2019

DIVISION OF STATE ARCHITECT
355 South Grand Avenue, Suite 2100
Los Angeles, California. 90012
ph: (213) 897-3995 Fax: (213) 897-3159
agency

tBP
architecture
planning
interiors

LICENSED ARCHITECT
JAMES PAIGE KOONS
No. C25409
REN. 1-31-13
STATE OF CALIFORNIA

tBP/Architecture
4611 Teller Avenue
Newport Beach, CA 92660
ph: 949.673.0300 fx: 949.732.3895
architect

consultant

COMPTON COLLEGE
INSTRUCTIONAL BUILDING No. 2

COMPTON COMMUNITY COLLEGE DISTRICT
1111 E. ARTESIA BLVD. COMPTON, CA.

owner

tBP project number : 20998.00

file name: D8-0820

drawn by: checked by:

date: 04/08/2019

Rev:	date:	description:

THIS DRAWING AND THE DESIGNS, DEFINITIONS, IDEAS AND OTHER INFORMATION CONTAINED HEREIN CONSTITUTE UNPUBLISHED WORK OF tBP/ARCHITECTURE AND SHALL REMAIN THE PROPERTY OF tBP/ARCHITECTURE. NO REPRODUCTION, NO PART THEREOF SHALL BE REPRODUCED, DISCLOSED, DISTRIBUTED, SOLD, PUBLISHED OR OTHERWISE USED IN ANY WAY WITHOUT THE ADVANCED EXPRESS WRITTEN CONSENT OF tBP/ARCHITECTURE.

drawing title:
WINDOW WALL DETAILS

drawing no.:
8.20
drawing of

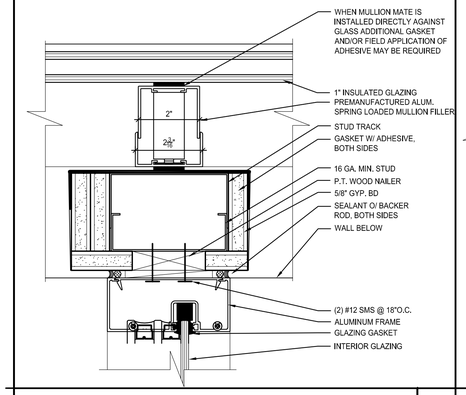

WALL @ MULLION MATE - PLAN | SCALE: 1/2" = 1'-0" | 1

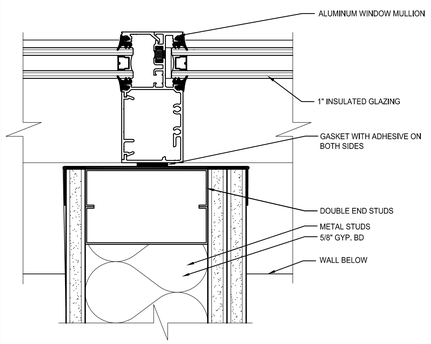

WALL @ MULLION - PLAN | SCALE: 1/2" = 1'-0" | 2

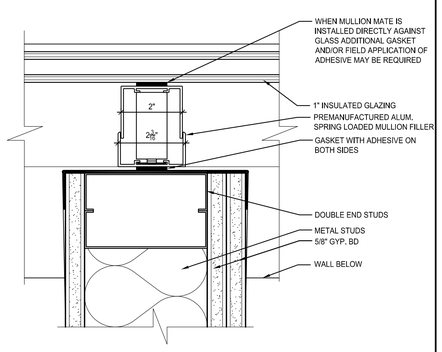

WALL @ MULLION - PLAN | SCALE: 1/2" = 1'-0" | 3

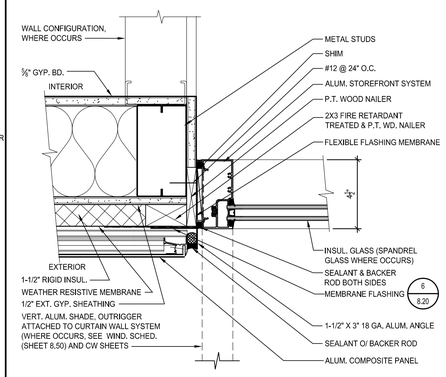

EXTERIOR JAMB SECTION - ALUM. COMP. PANEL | SCALE: 3" = 1'-0" | 4

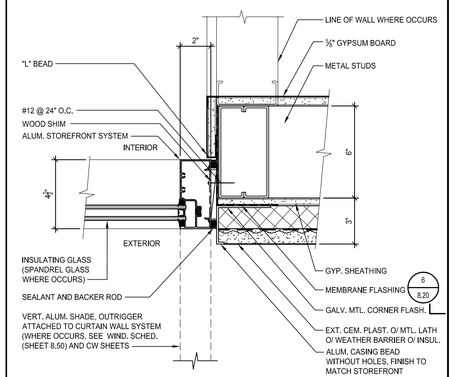

EXTERIOR JAMB SECTION - CEM. PLAST. | SCALE: 3" = 1'-0" | 5

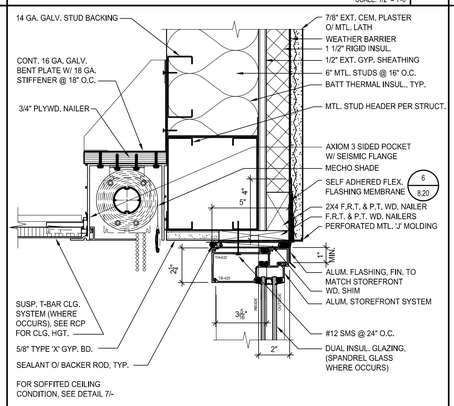

EXTERIOR HEAD SECTION - EXT. CEM. PLASTER | SCALE: 3" = 1'-0" | 8

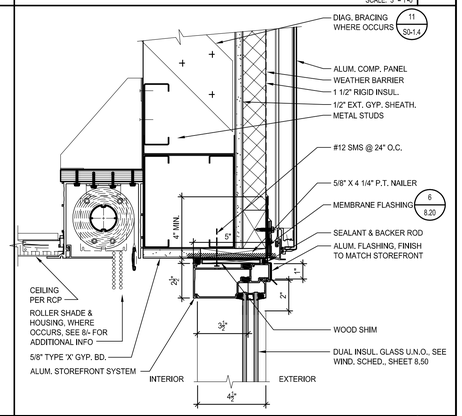

EXTR. HEAD SECTION - COMPOSITE MTL. PANEL | SCALE: 3" = 1'-0" | 10

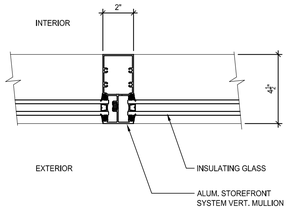

VERTICAL MULLION - PLAN | SCALE: 3" = 1'-0" | 11

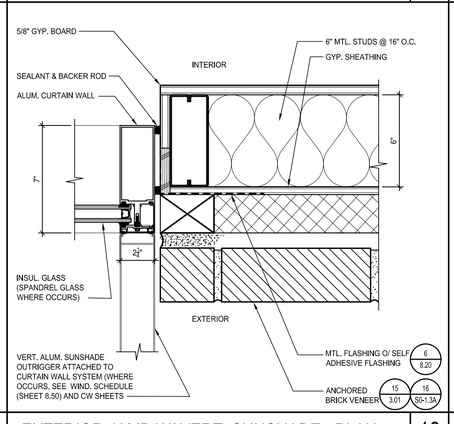

EXTERIOR JAMB W/ VERT, SUNSHADE - PLAN | SCALE: 3" = 1'-0" | 13

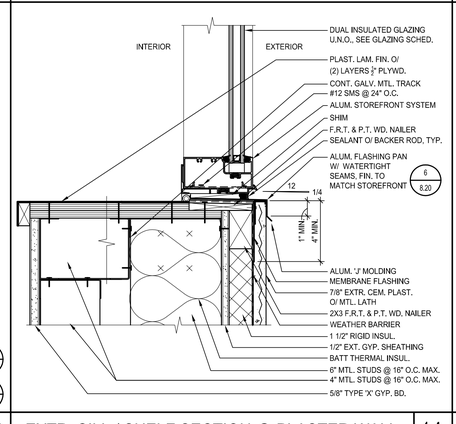

EXTR. SILL / SHELF SECTION @ PLASTER WALL | SCALE: 3" = 1'-0" | 14

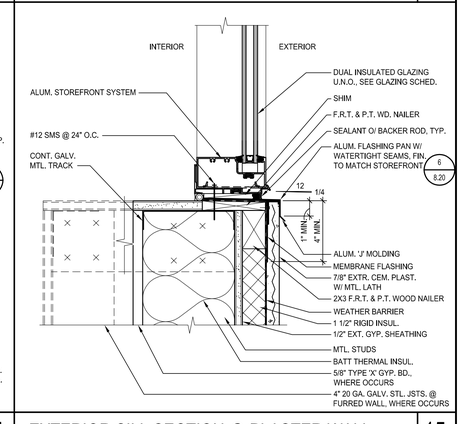

EXTERIOR SILL SECTION @ PLASTER WALL | SCALE: 3" = 1'-0" | 15

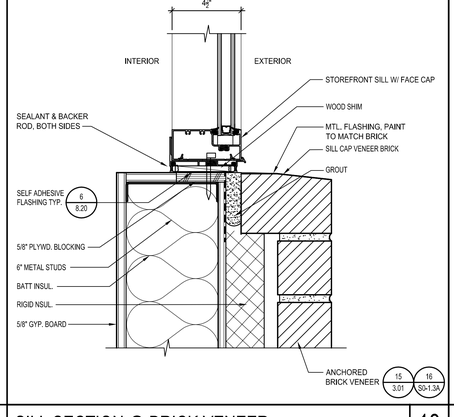

SILL SECTION @ BRICK VENEER | SCALE: 3" = 1'-0" | 18

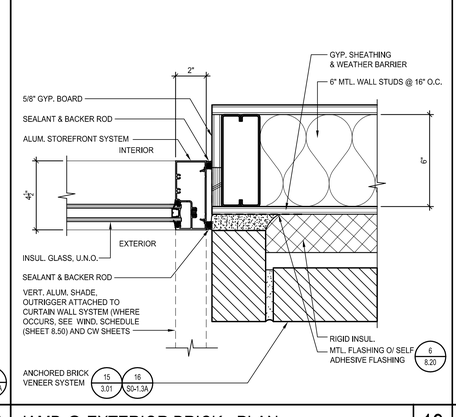

JAMB @ EXTERIOR BRICK - PLAN | SCALE: 3" = 1'-0" | 19

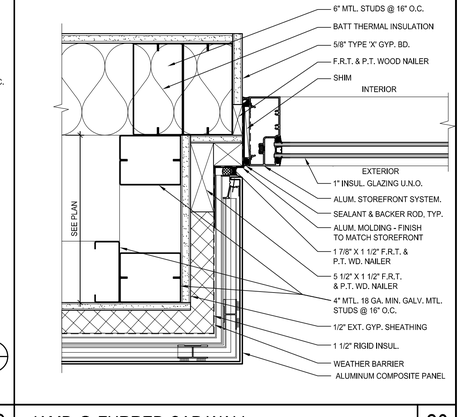

JAMB @ FURRED CAP WALL | SCALE: 3" = 1'-0" | 20

IDENTIFICATION STAMP
DIV. OF THE STATE ARCHITECT
APP. 03-119458 INC:
REVIEWED FOR
SS ☑ FLS ☑ ACS ☑
DATE:05/23/2019

DIVISION OF STATE ARCHITECT
355 South Grand Avenue, Suite 2100
Los Angeles, California. 90012
ph: (213) 897-3995 Fax: (213) 897-3159
agency

tBP
architecture
planning
interiors
LICENSED ARCHITECT
CRAIG PAIGE BOOM
No. C25409
STATE OF CALIFORNIA
tBP/Architecture
4611 Teller Avenue
Newport Beach, CA 92660
ph: 949.673.0300 fx: 949.732.3895
architect
consultant

COMPTON COLLEGE
INSTRUCTIONAL BUILDING No. 2
COMPTON COMMUNITY COLLEGE DISTRICT
1111 E. ARTESIA BLVD. COMPTON, CA.
owner

tBP project number : 20998.00
file name: DII-0820
drawn by: checked by:
date: 04/08/2019

Rev:	date:	description:

THIS DRAWING AND THE DESIGNS, DEFINITIONS, IDEAS AND OTHER INFORMATION CONTAINED HEREIN CONSTITUTE UNPUBLISHED WORK OF tBP/ARCHITECTURE AND SHALL REMAIN THE PROPERTY OF tBP/ARCHITECTURE. NO PORTION(S) THEREOF SHALL BE REPRODUCED, DISCLOSED, DISTRIBUTED, SOLD, PUBLISHED OR OTHERWISE USED IN ANY MANNER WITHOUT THE ADVANCED EXPRESS WRITTEN CONSENT OF tBP/ARCHITECTURE.

drawing title:
STOREFRONT DETAILS

drawing no.:
8.21
drawing of

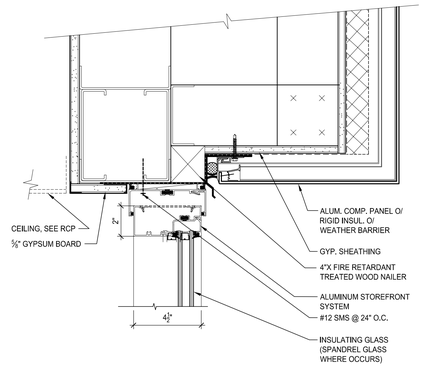

HEAD DETAIL
SCALE: 3" = 1'-0" | 1

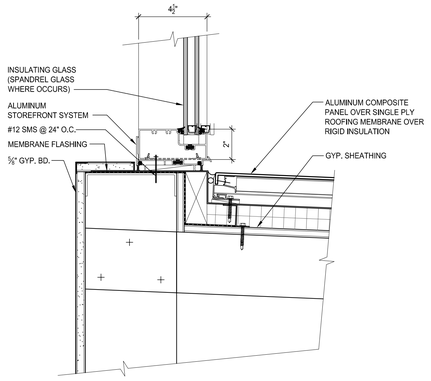

SILL DETAIL
SCALE: 3" = 1'-0" | 6

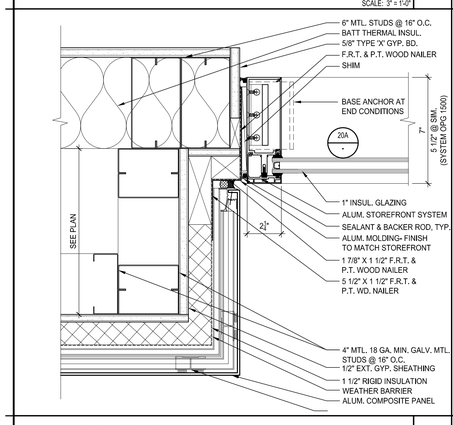

JAMB @ EYEBROW
SCALE: 3" = 1'-0" | 11

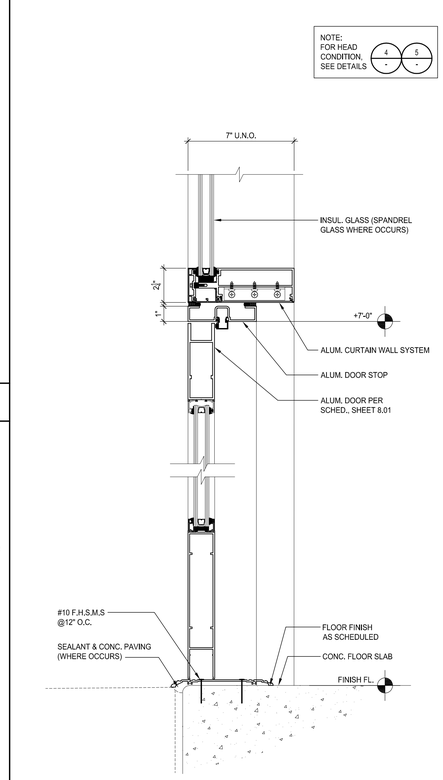

CURTAIN WALL DOOR HEAD & SILL
SCALE: 3" = 1'-0" | 7

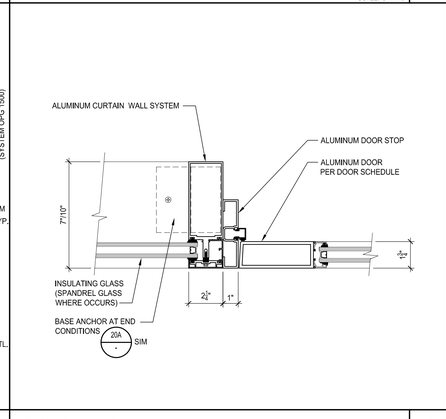

DOOR JAMB
SCALE: 3" = 1'-0" | 12

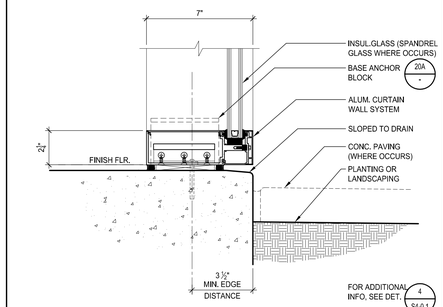

SILL SECTION @ SLAB ON GRADE
SCALE: 3" = 1'-0" | 8

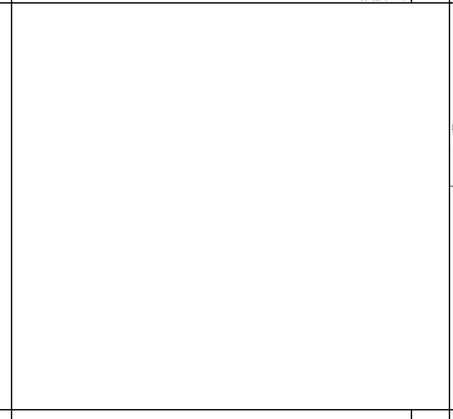

JAMB DETAIL
SCALE: 3" = 1'-0" | 14

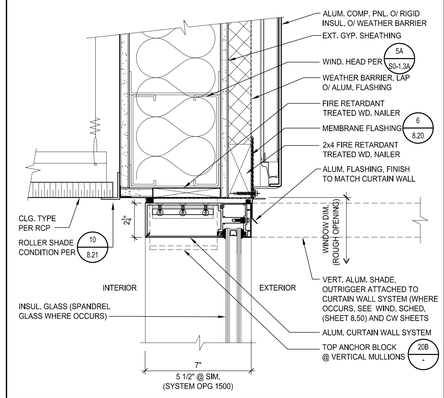

EXTERIOR HEAD SECTION - ALUM. COMP. PNL.
SCALE: 3" = 1'-0" | 4

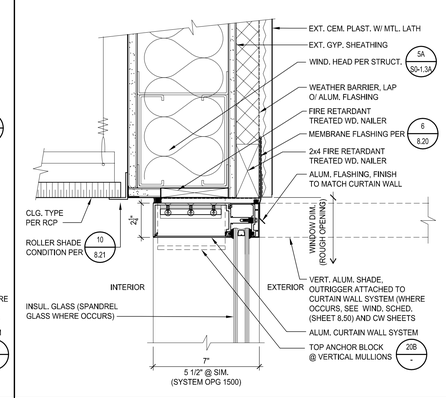

EXTERIOR HEAD SECTION - EXTR. CEM. PLAST.
SCALE: 3" = 1'-0" | 5

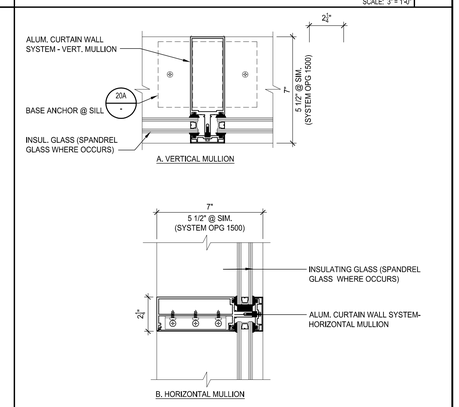

VERTICAL/HORIZ MULLION
SCALE: 3" = 1'-0" | 10

SILL DETAIL
SCALE: 3" = 1'-0" | 16

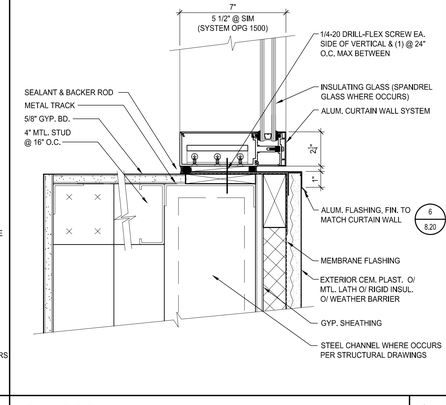

SILL DETAIL
SCALE: 3" = 1'-0" | 17

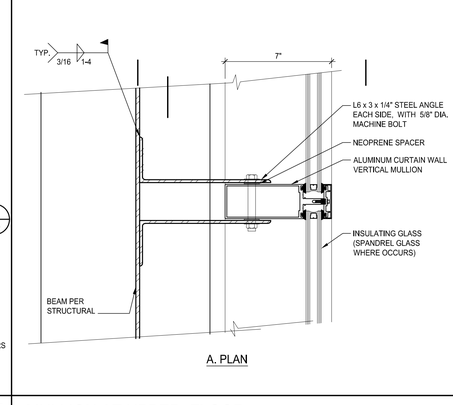

MULLION AT UPPER FLOOR
SCALE: 3" = 1'-0" | 19

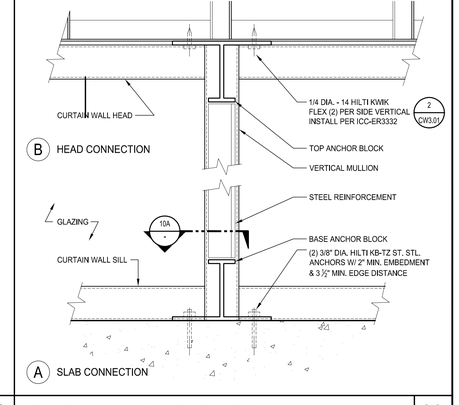

CURTAIN WALL ANCHORAGE
SCALE: 3" = 1'-0" | 20

IDENTIFICATION STAMP
DIV. OF THE STATE ARCHITECT
APP. 03-119458 INC:
REVIEWED FOR
SS ☑ FLS ☑ ACS ☑
DATE:05/23/2019

DIVISION OF STATE ARCHITECT
355 South Grand Avenue, Suite 2100
Los Angeles, California. 90012
ph: (213) 897-3995 Fax: (213) 897-3159
agency

tBP architecture planning interiors

LICENSED ARCHITECT RAIGE TOOGOOD No. C25409 STATE OF CALIFORNIA REN. 7-31-21

tBP/Architecture
4611 Teller Avenue
Newport Beach, CA 92660
ph: 949.673.0300 fx: 949.732.3895
architect

consultant

COMPTON COLLEGE
INSTRUCTIONAL BUILDING No. 2
COMPTON COMMUNITY COLLEGE DISTRICT
1111 E. ARTESIA BLVD. COMPTON, CA.

owner

tBP project number : 20998.00
file name:
drawn by: checked by:
date: 04/08/2019

Rev: date: description:

THIS DRAWING AND THE DESIGNS, EDITORIES, IDEAS AND OTHER INFORMATION CONTAINED HEREIN, CONSTITUTE UNPUBLISHED WORK OF tBP/ARCHITECTURE AND SHALL REMAIN THE PROPERTY OF tBP/ARCHITECTURE IN PERPETUITY. NO PART HEREOF SHALL BE REPRODUCED, DISCLOSED, DISTRIBUTED, SOLD, PUBLISHED OR OTHERWISE USED BY ANY WAY WITHOUT THE IS RIGHTS EXPRESS WRITTEN CONSENT OF tBP/ARCHITECTURE.

drawing title:
CURTAIN WALL DETAILS

drawing no.:
8.22
drawing of

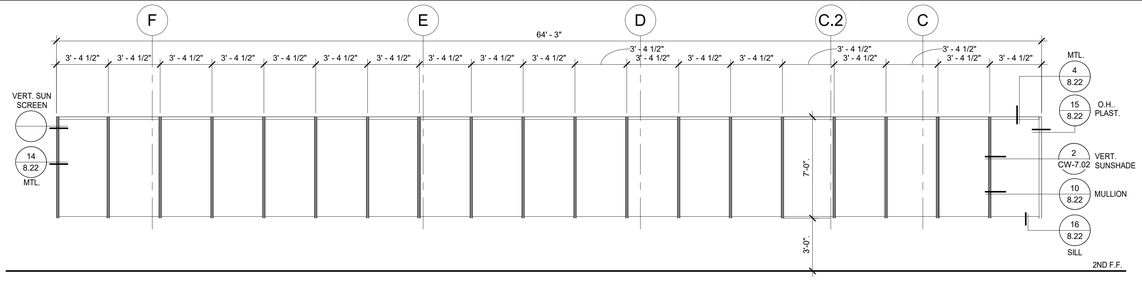

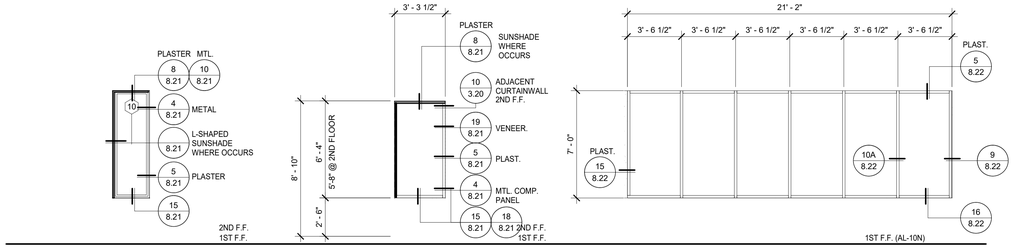

FOR ADDITIONAL INFORMATION, SEE SHEET CW3.03

AL-1E		
	GLAZING TYPE	GL-1
	FRAME MATL.	5 1/2" ALUM
	FRAME FIN.	F
	FRAME COLOR	SILVER
	EXT. SUNSCREEN	VERTICAL
	INT. SUNSHADE	MANUAL ROLLER SHADE

FOR ADDITIONAL INFORMATION, SEE SHEET CW3.06

AL-2S (6)		
	GLAZING TYPE	GL-1
	FRAME MATL.	5 1/2" ALUM
	FRAME FIN.	F
	FRAME COLOR	SILVER
	EXT. SUNSCREEN	L-SHAPE
	INT. SUNSHADE	MANUAL ROLLER SHADE

AL-2E (6) EAST - EXT. VERTICAL SUN SCREENS

FOR ADDITIONAL INFORMATION, SEE SHEET CW3.06

AL-4S (2)		
	GLAZING TYPE	GL-1
	FRAME MATL.	5 1/2" ALUM
	FRAME FIN.	F
	FRAME COLOR	SILVER
	EXT. SUNSCREEN	HORIZONTAL
	INT. SUNSHADE	MANUAL ROLLER SHADE

AL-4W (4) WEST - NO SUN SCREENS
AL-4E (7) EAST - VERTICAL SUN SCREENS
AL-4N (2) NORTH 2ND FLOOR - NO SUN SCREENS

FOR ADDITIONAL INFORMATION, SEE SHEET CW3.03

AL-10N		
	GLAZING TYPE	GL-1
	FRAME MATL.	5 1/2" ALUM
	FRAME FIN.	F
	FRAME COLOR	SILVER
	EXT. SUNSCREEN	NO
	INT. SUNSHADE	ELECTRIC ROLLER SHADE

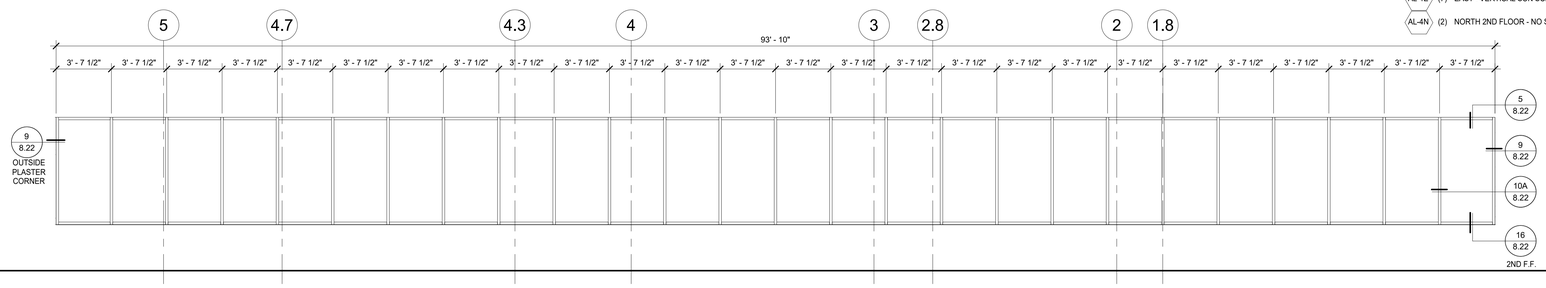

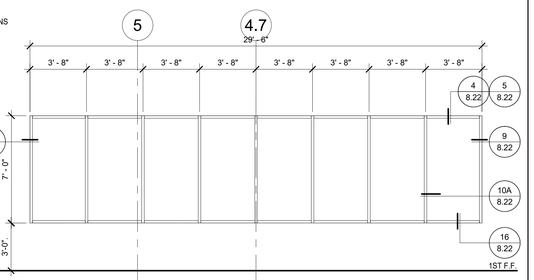

FOR ADDITIONAL INFORMATION, SEE SHEET CW3.01

AL-1N		
	GLAZING TYPE	GL-1
	FRAME MATL.	5 1/2" ALUM
	FRAME FIN.	F
	FRAME COLOR	SILVER
	EXT. SUNSCREEN	NO
	INT. SUNSHADE	ELECTRIC ROLLER SHADE

FOR ADDITIONAL INFORMATION, SEE SHEET CW3.02

AL-9N NO SUN SCREENS		
	GLAZING TYPE	GL-1
	FRAME MATL.	5 1/2" ALUM
	FRAME FIN.	F
	FRAME COLOR	SILVER
	EXT. SUNSCREEN	NO
	INT. SUNSHADE	ELECTRIC ROLLER SHADE

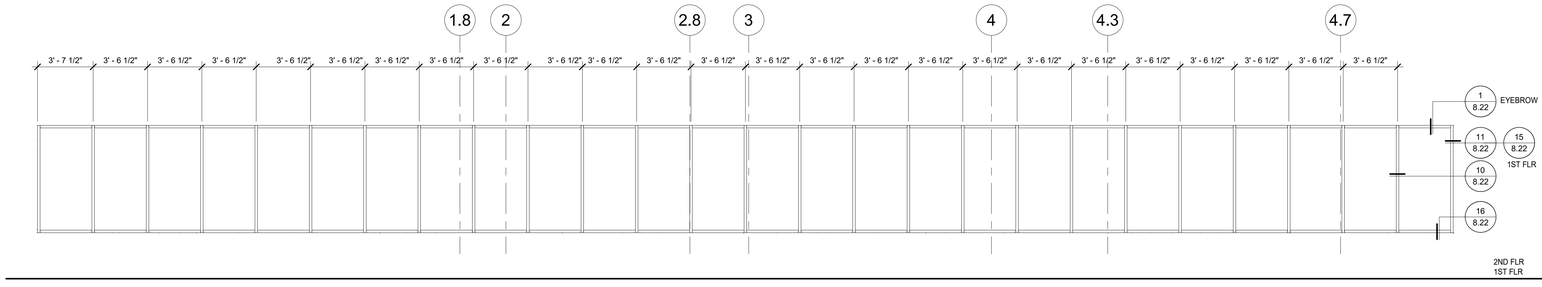

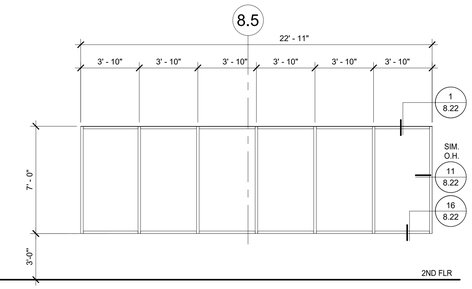

FOR ADDITIONAL INFORMATION, SEE SHEET CW3.01

AL-1S (2)		
	GLAZING TYPE	GL-1
	FRAME MATL.	5 1/2" ALUM.
	FRAME FIN.	F
	FRAME COLOR	SILVER
	EXT. SUNSCREEN	NO
	INT. SUNSHADE	ELECTRIC ROLLER SHADE

FOR ADDITIONAL INFORMATION, SEE SHEET CW3.02

AL-7S		
	GLAZING TYPE	GL-1
	FRAME MATL.	5 1/2" ALUM.
	FRAME FIN.	F
	FRAME COLOR	SILVER
	EXT. SUNSCREEN	NO
	INT. SUNSHADE	MANUAL ROLLER SHADE

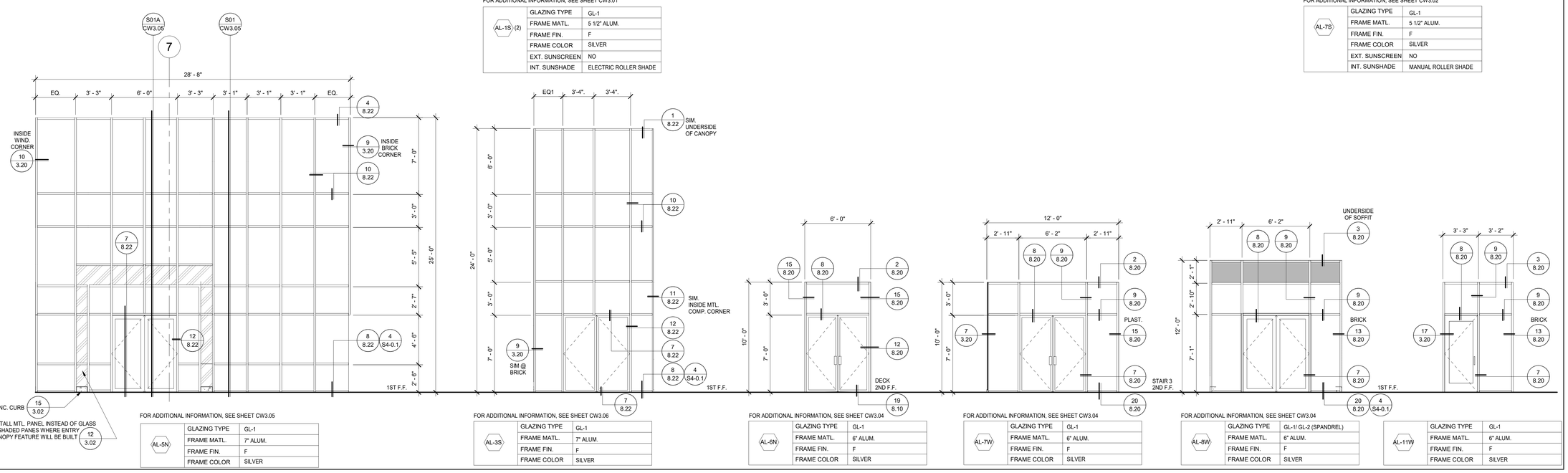

FOR ADDITIONAL INFORMATION, SEE SHEET CW3.05

AL-5N		
	GLAZING TYPE	GL-1
	FRAME MATL.	7" ALUM.
	FRAME FIN.	F
	FRAME COLOR	SILVER

FOR ADDITIONAL INFORMATION, SEE SHEET CW3.06

AL-3S		
	GLAZING TYPE	GL-1
	FRAME MATL.	7" ALUM.
	FRAME FIN.	F
	FRAME COLOR	SILVER

FOR ADDITIONAL INFORMATION, SEE SHEET CW3.04

AL-6N		
	GLAZING TYPE	GL-1
	FRAME MATL.	6" ALUM.
	FRAME FIN.	F
	FRAME COLOR	SILVER

FOR ADDITIONAL INFORMATION, SEE SHEET CW3.04

AL-7W		
	GLAZING TYPE	GL-1
	FRAME MATL.	6" ALUM.
	FRAME FIN.	F
	FRAME COLOR	SILVER

FOR ADDITIONAL INFORMATION, SEE SHEET CW3.04

AL-8W		
	GLAZING TYPE	GL-1/ GL-2 (SPANDREL)
	FRAME MATL.	6" ALUM.
	FRAME FIN.	F
	FRAME COLOR	SILVER

AL-11W		
	GLAZING TYPE	GL-1
	FRAME MATL.	6" ALUM.
	FRAME FIN.	F
	FRAME COLOR	SILVER

4/8/2019 5:34:49 PM

IDENTIFICATION STAMP
DIV. OF THE STATE ARCHITECT
APP. 03-119458 INC:
REVIEWED FOR
SS ☑ FLS ☑ ACS ☑
DATE:05/23/2019

DIVISION OF THE STATE ARCHITECT
355 South Grand Avenue, Suite 2100
Los Angeles, CA 90012
ph: (213) 897-3995 fx:(213) 897-3159

agency

tBP
architecture
planning
interiors

tBP/Architecture
4611 Teller Avenue
Newport Beach, CA 92660
ph: 949.673.0300 fx: 949.732.3895

LICENSED ARCHITECT GREGORY PAIGE MCNEIL No. C25409 REN. 7-31-19 STATE OF CALIFORNIA

architect

consultant

COMPTON COLLEGE
INSTRUCTIONAL BUILDING No.2
COMPTON COMMUNITY COLLEGE DISTRICT
1111 E. ARTESIA BLVD. COMPTON, CA.

owner

tBP project number: 20998.00
file name:
drawn by: checked by:
date: 04/08/2019

rev:	date:	description:

THIS DRAWING AND THE DESIGNS, DEPICTIONS, IDEAS AND OTHER INFORMATION CONTAINED HEREIN CONSTITUTE UNPUBLISHED WORK OF tBP/ARCHITECTURE AND SHALL REMAIN PROPERTY OF tBP/ARCHITECTURE IN PERPETUITY. NO PART THEREOF SHALL BE REPRODUCED, DISCLOSED, DISTRIBUTED, SOLD, PUBLISHED OR OTHERWISE USED IN ANY WAY WITHOUT THE ADVANCED EXPRESS WRITTEN CONSENT OF tBP.

drawing title:
WINDOW SCHEDULE - EXTERIOR WINDOWS

drawing no.:
8.50
drawing of

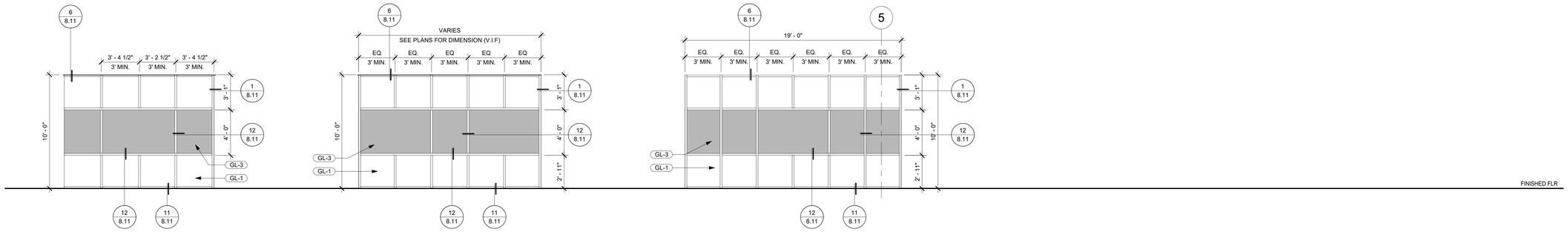

SF-4		
	GLAZING TYPE	GL-1 / GL-3 (FROSTED)
	FRAME MATL.	5 1/2" ALUM.
	FRAME FIN.	F
	FRAME COLOR	SILVER

SF-5		
	GLAZING TYPE	GL-1 / GL-3 (FROSTED)
	FRAME MATL.	5 1/2" ALUM.
	FRAME FIN.	F
	FRAME COLOR	SILVER

SF-6		
	GLAZING TYPE	GL-1 / GL-3 (FROSTED)
	FRAME MATL.	5 1/2" ALUM.
	FRAME FIN.	F
	FRAME COLOR	SILVER

IDENTIFICATION STAMP
DIV. OF THE STATE ARCHITECT
APP. 03-119458 INC:
REVIEWED FOR
SS ☑ FLS ☑ ACS ☑
DATE:05/23/2019

DIVISION OF THE STATE ARCHITECT
355 South Grand Avenue, Suite 2100
Los Angeles, CA 90012
ph: (213) 897-3995 fx:(213) 897-3159

agency

tBP
architecture
planning
interiors

LICENSED ARCHITECT
GARY PAIGE MOSS
NO. C25409
REN. 7-31-11
STATE OF CALIFORNIA

tBP/Architecture
4611 Teller Avenue
Newport Beach, CA 92660
ph: 949.673.0300 fx: 949.732.3895

architect

consultant

COMPTON COLLEGE
INSTRUCTIONAL BUILDING No.2

COMPTON COMMUNITY COLLEGE DISTRICT
1111 E. ARTESIA BLVD. COMPTON, CA.

owner

tBP project number: 20998.00
file name:
drawn by: checked by:
date: 04/08/2019

rev:	date:	description:

THIS DRAWING AND THE DESIGNS, DEPICTIONS, IDEAS AND OTHER INFORMATION CONTAINED HEREIN CONSTITUTE UNPUBLISHED WORK OF tBP/ARCHITECTURE AND SHALL REMAIN PROPERTY OF tBP/ARCHITECTURE IN PERPETUITY. NO PART THEREOF SHALL BE REPRODUCED, DISCLOSED, DISTRIBUTED, SOLD, PUBLISHED OR OTHERWISE USED IN ANY WAY WITHOUT THE ADVANCED EXPRESS WRITTEN CONSENT OF tBP/ARCHITECTURE.

drawing title:
WINDOW SCHEDULE - INTERIOR WINDOWS

drawing no.:
8.51
drawing of

4/8/2019 5:35:34 PM

ROOM FINISH SCHEDULE

Room Style	SPACE		FLOOR			BASE				WALLS			CEILINGS				REMARKS
	#	NAME	MATERIAL	FINISH	COLOR	MATERIAL	HT.	FINISH	COLOR	MATERIAL	FINISH	COLOR	MATERIAL	TYPE	FINISH	COLOR	
1ST FLR.																	
(none)	100	LOBBY	CONCRETE	POLISHED	C-1	RUBBER BASE	6"	F	RB-1	GYP. BD.	EGGSHELL	P-1	A.C.T. / OPEN	LINEAR/OPEN	F/ N/A	AC-5, N/A	
(none)	101	VENDING MACHINES	CONCRETE	POLISHED	C-1	RUBBER BASE	6"	F	RB-1	GYP. BD.	EGGSHELL	P-1	A.C.T.	LINEAR	F	AC-5	
RESTROOMS	102	WOMEN'S	PORCELAIN TILE	F	PT-2	COVE BASE TILE	6"	F	ACT-1	PORCELAIN TILE	F	PT-1/3/4	GYP. BD.	-	PAINT-SEMI-GLOSS	P-1	STONE THRESHHOLD (T-1)
RESTROOMS	103	MEN'S	PORCELAIN TILE	F	PT-2	COVE BASE TILE	6"	F	ACT-1	PORCELAIN TILE	F	PT-1/3/4	GYP. BD.	-	PAINT-SEMI-GLOSS	P-1	STONE THRESHHOLD (T-1)
RESTROOMS	104	TOILET	PORCELAIN TILE	F	PT-2	COVE BASE TILE	6"	F	ACT-1	PORCELAIN TILE	F	PT-1/3/4	GYP. BD.	-	PAINT-SEMI-GLOSS	P-1	STONE THRESHHOLD (T-1)
(none)	105	CORR.	CONCRETE	POLISHED	CF-1	RUBBER BASE	6"	F	RB-1	GYP. BD.	SATIN	P-1	A.C.T.	2X4 LINEAR	F	AC-5	
(none)	106	ELEV		-		STAINLESS STL	6"	F	SST-1								
SUPPORT	107	E. MACH.	CONCRETE	EXPOSED	C-2	RUBBER BASE	4"	F	RB-1	GYP. BD.	PAINT - SATIN FIN.	P-2	U.O.S.	-	PAINT - SATIN FIN.	P-2	
SUPPORT	108	DATA	CONCRETE	EXPOSED	C-2	RUBBER BASE	4"	F	RB-1	GYP. BD.	PAINT - SATIN FIN.	P-2	U.O.S.	-	PAINT - SATIN FIN.	P-2	
SUPPORT	109	ELECTRICAL	CONCRETE	EXPOSED	C-2	RUBBER BASE	4"	F	RB-1	GYP. BD.	EGGSHELL	P-1	U.O.S.	-	EGGSHELL	P-1	
SUPPORT	110	DATA	CONCRETE	EXPOSED	C-2	RUBBER BASE	4"	F	RB-1	GYP. BD.	EGGSHELL	P-1	U.O.S.	-	EGGSHELL	P-1	
RESTROOMS	111	TOILET	PORCELAIN TILE	F	PT-2	ALUMINUM COVE TRIM	6"	F	ACT-1	PORCELAIN TILE	F	PT-1/3/4	GYP. BD.	-	PAINT-SEMI-GLOSS	P-1	STONE THRESHHOLD (T-1)
RESTROOMS	112	TOILET	PORCELAIN TILE	F	PT-2	ALUMINUM COVE TRIM	6"	F	ACT-1	PORCELAIN TILE	F	PT-1/3/4	GYP. BD.	-	PAINT-SEMI-GLOSS	P-1	STONE THRESHHOLD (T-1)
SUPPORT	113	JANITOR	CONCRETE	F	C-1	RUBBER BASE	4"	F	RB-1	FRP / GYP. BD.	F / PAINT-SEMI-GLOSS	FRP-1 / P-2	U.O.S.	-	PAINT-SEMI-GLOSS	P-1	
CLASSROOM	120	HUM. LAB COMP 1	LINOLEUM & WALK-OFF CPT	F	LF-1, LF-2,LF3	RUBBER BASE	6"	F	RB-1	GYP. BD.	EGGSHELL	P-1, P-4, WC-1	A.C.T.	2X4	F	AC-1	
CLASSROOM	121	AUDIO/ VISUAL	LINOLEUM & WALK-OFF CPT	F	LF-1, LF-2,LF3	RUBBER BASE	6"	F	RB-1	GYP. BD.	EGGSHELL	P-1, P-4, WC-1	PIPE GRID / U.O.S.	-	F / PAINT-SATIN FIN.	-	CASEWORK: CABINETS (PL-1), COUNTERTOP (SSU-1). CPT-2 AT ENTRY. REFER TO SHEET 9.03 FLOOR FINISH PLAN.
STORAGE2	122	STOR.	CONCRETE	F	C-1	RUBBER BASE	4"	F	RB-1	GYP. BD.	EGGSHELL	P-1	GYP. BD.	-	PAINT - SATIN FIN.	-	CASEWORK: CABINETS (PL-1), COUNTERTOP (SSU-1)
OFFICE	123	OFC.	CONCRETE	F	C-1	RUBBER BASE	4"	F	RB-1	GYP. BD.	PAINT - SATIN FIN.	P-1 & P-2	A.C.T.	2X4	F	AC-1	
OFFICE	124	LOUNGE	CONCRETE	F	C-1	RUBBER BASE	4"	F	RB-1	GYP. BD.	PAINT - SATIN FIN.	P-1	A.C.T.	2X4	F	AC-1	CASEWORK: CABINETS (PL-1), COUNTERTOP (SSU-1)
CLASSROOM	125	HUM. LAB	LINOLEUM & WALK-OFF CPT.	F	LF-1, LF-2, LF-3	RUBBER BASE	6"	F	RB-1	GYP. BD.	EGGSHELL	P-1, P-4, WC-1	U.O.S.	2X4	PAINT - SATIN FIN.	-	CASEWORK: CABINETS (PL-1), COUNTERTOP (SSU-1). CPT-2 AT ENTRY. REFER TO SHEET 9.03 FLOOR FINISH PLAN.
CLASSROOM	126	C.R.1	LINOLEUM & WALK-OFF CPT.	F	LF-1, LF-2, LF-3	RUBBER BASE	6"	F	RB-1	GYP. BD.	EGGSHELL	P-2, P-4, WC-1	A.C.T.	2X4	F	AC-1	CPT-2 AT ENTRY. REFER TO SHEET 9.03 FLOOR FINISH PLAN.
CLASSROOM	127	C.R.2	LINOLEUM & WALK-OFF CPT.	F	LF-1, LF-2, LF-3	RUBBER BASE	6"	F	RB-1	GYP. BD.	EGGSHELL	P-1, P-4, WC-1	A.C.T.	2X4	F	AC-1	CPT-2 AT ENTRY. REFER TO SHEET 9.03 FLOOR FINISH PLAN.
CLASSROOM	128	C.R.3	LINOLEUM & WALK-OFF CPT.	F	LF-1, LF-2, LF-3	RUBBER BASE	6"	F	RB-1	GYP. BD.	EGGSHELL	P-1, P-4, WC-1	A.C.T.	2X4	F	AC-1	CPT-2 AT ENTRY. REFER TO SHEET 9.03 FLOOR FINISH PLAN.
CLASSROOM	129	MEETING ROOM	LINOLEUM & WALK-OFF CPT.		LF-1, LF-2, LF-3	RUBBER BASE	6"				EGGSHELL	P-1, P-4, WC-1					CPT-2 AT ENTRY. REFER TO SHEET 9.03 FLOOR FINISH PLAN.
CLASSROOM	130	HUM. LAB COMP 2	LINOLEUM & WALK-OFF CPT.	F	LF-1, LF-2, LF-3	RUBBER BASE	6"	F	RB-1	GYP. BD.	EGGSHELL	P-1, P-4, WC-1	A.C.T.	2X4	F	AC-1	CPT-2 AT ENTRY. REFER TO SHEET 9.03 FLOOR FINISH PLAN.
CLASSROOM	131	READ/ STUDY	LINOLEUM & WALK-OFF CPT.	F	LF-1, LF-2, LF-3	RUBBER BASE	6"	F	RB-1	GYP. BD.	EGGSHELL	P-1, P-4, WC-1	A.C.T.	2X4	F	AC-1	CPT-2 AT ENTRY. REFER TO SHEET 9.03 FLOOR FINISH PLAN.
OFFICE	140	WAITING	WALK-OFF/CARPET TILE	F	CPT-1, CPT-2	RUBBER BASE	4"	F	RB-1	GYP. BD.	EGGSHELL	P-1 & P-2	A.C.T.	2X4	F	AC-1	CPT-2 AT ENTRY. REFER TO SHEET 9.03 FLOOR FINISH PLAN.
OFFICE	141	OFC.	CARPET TILE	F	CPT-1	RUBBER BASE	4"	F	RB-1	GYP. BD.	EGGSHELL	P-1 & P-2	A.C.T.	2X4	F	AC-1	
OFFICE	142	OFC.	CARPET TILE	F	CPT-1	RUBBER BASE	4"	F	RB-1	GYP. BD.	EGGSHELL	P-1 & P-2	A.C.T.	2X4	F	AC-1	
OFFICE	143	OFC.	CARPET TILE	F	CPT-1	RUBBER BASE	4"	F	RB-1	GYP. BD.	EGGSHELL	P-1 & P-2	A.C.T.	2X4	F	AC-1	
OFFICE	144	OFC.	CARPET TILE	F	CPT-1	RUBBER BASE	4"	F	RB-1	GYP. BD.	EGGSHELL	P-1 & P-2	A.C.T.	2X4	F	AC-1	
OFFICE	145	MTG. RM	CARPET TILE	F	CPT-1	RUBBER BASE	4"	F	RB-1	GYP. BD.	EGGSHELL	P-1 & P-2	A.C.T.	2X4	F	AC-1	
2ND FLR.																	
(none)	200	CORR.	LINOLEUM FLOOR	F	LF-1	RUBBER BASE	4"	F	RB-1	GYP. BD.	EGGSHELL	P-1	GYP. BD.	2X4 LINEAR	F	AC-5	
(none)	201	LACT.	LIONOLEUM FLOOR	F	LF-1	RUBBER BASE	4"	F	RB-1	GYP. BD.	EGGSHELL	P-1	GYP. BD.	-	F	P-2	CASEWORK: CABINETS (PL-1), COUNTERTOP (SSU-1)
RESTROOMS	203	WOMEN'S	PORCELAIN TILE	F	PT-2	COVE BASE TILE	6"	F	ACT-1	PORCELAIN TILE	F	PT-1/3/4	GYP. BD.	-	PAINT-SEMI-GLOSS	P-1	STONE THRESHHOLD (T-1)
RESTROOMS	204	MEN'S	PORCELAIN TILE	F	PT-2	COVE BASE TILE	6"	F	ACT-1	PORCELAIN TILE	F	PT-1/3/4	GYP. BD.	-	PAINT-SEMI-GLOSS	P-1	STONE THRESHHOLD (T-1)
RESTROOMS	205	TOILET	PORCELAIN TILE	F	PT-2	COVE BASE TILE	6"	F	ACT-1	PORCELAIN TILE	F	PT-1/3/4	GYP. BD.	-	PAINT-SEMI-GLOSS	P-1	STONE THRESHHOLD (T-1)
(none)	206	ELEV		F		STAINLESS STL	4"	F						-			
SUPPORT	207	DATA	CONCRETE FLOOR	F	C-2	RUBBER BASE	4"	F	RB-1	GYP. BD.	EGGSHELL	P-1	U.O.S.	-	PAINT - SATIN FIN.	P-2	
SUPPORT	208	ELECTRICAL	CONCRETE FLOOR	F	C-2	RUBBER BASE	4"	F	RB-1	GYP. BD.	EGGSHELL	P-1	U.O.S.				
SUPPORT	209	JAN	CONCRETE FLOOR	F	C-2	RUBBER BASE	4"	F	RB-1	GYP. BD.	EGGSHELL	P-1	U.O.S.				
RESTROOMS	211	TOILET	PORCELAIN TILE	F	PT-2	COVE BASE TILE	6"	F	ACT-1	PORCELAIN TILE	F	PT-1/3/4	GYP. BD.	-	PAINT-SEMI-GLOSS	P-1	STONE THRESHHOLD (T-1)
RESTROOMS	212	TOILET	PORCELAIN TILE	F	PT-2	COVE BASE TILE	6"	F	ACT-1	PORCELAIN TILE	F	PT-1/3/4	GYP. BD.	-	PAINT-SEMI-GLOSS	P-1	STONE THRESHHOLD (T-1)
(none)	213	HALL	WALK-OFF AND CARPET TILE	F	CPT-1 & CPT-2	RUBBER BASE	4"	F	RB-1	GYP. BD.	EGGSHELL	P-1	A.C.T.	2X4	F	AC-1	
(none)	214	HALL	LINOLEUM FLOOR		LF-1	RUBBER BASE	4"	F	RB-1	GYP. BD.	EGGSHELL	P-1	A.C.T.	2X4	F	AC-1	
CLASSROOM	220	MTG. RM 2	LINOLEUM & WALK-OFF CPT.	F	LF-1, LF-2, LF-3	RUBBER BASE	6"	F	RB-1	GYP. BD.	EGGSHELL	P-1, P-4, WC-1	A.C.T.	2X4	F	AC-1	
CLASSROOM	221	C.R.5	LINOLEUM & WALK-OFF CPT.	F	LF-1, LF-2, LF-3	RUBBER BASE	6"	F	RB-1	GYP. BD.	EGGSHELL	P-1, P-4, WC-1	A.C.T.	2X4	F	AC-1	
CLASSROOM	222	C.R.4	LINOLEUM & WALK-OFF CPT.	F	LF-1, LF-2, LF-3	RUBBER BASE	6"	F	RB-1	GYP. BD.	EGGSHELL	P-1, P-4, WC-1	A.C.T.	2X4	F	AC-1	
CLASSROOM	223	C.R.6	LINOLEUM & WALK-OFF CPT.	F	LF-1, LF-2, LF-3	RUBBER BASE	6"	F	RB-1	GYP. BD.	EGGSHELL	P-1, P-4, WC-1	A.C.T.	2X4	F	AC-1	
CLASSROOM	224	C.R.7	LINOLEUM & WALK-OFF CPT.	F	LF-1, LF-2, LF-3	RUBBER BASE	6"	F	RB-1	GYP. BD.	EGGSHELL	P-1, P-4, WC-1	A.C.T.	2X4	F	AC-1	
CLASSROOM	225	C.R.8	LINOLEUM & WALK-OFF CPT.	F	LF-1, LF-2, LF-3	RUBBER BASE	6"	F	RB-1	GYP. BD.	EGGSHELL	P-1, P-4, WC-1	A.C.T.	2X4	F	AC-1	
CLASSROOM	226	STUDY - COMPUTERS	LINOLEUM & WALK-OFF CPT.	F	LF-1, LF-2, LF-3	RUBBER BASE	6"	F	RB-1	GYP. BD.	EGGSHELL	P-1, P-4, WC-1	A.C.T.	2X4	F	AC-1	
OFFICE	230	LOUNGE	WALK-OFF/CARPET TILE	F	CPT-1, CPT-2	RUBBER BASE	4"	F	RB-1	GYP. BD.	EGGSHELL	P-1	A.C.T.	2X4	F	AC-1	CASEWORK: CABINETS (PL-1), COUNTERTOP (SSU-1)
OFFICE	231	OFC.	CARPET TILE	F	CPT-1	RUBBER BASE	4"	F	RB-1	GYP. BD.	EGGSHELL	P-1 & P-2	A.C.T.	2X4	F	AC-1	
OFFICE	232	OFC.	CARPET TILE	F	CPT-1	RUBBER BASE	4"	F	RB-1	GYP. BD.	EGGSHELL	P-1 & P-2	A.C.T.	2X4	F	AC-1	
OFFICE	233	OFC.	CARPET TILE	F	CPT-1	RUBBER BASE	4"	F	RB-1	GYP. BD.	EGGSHELL	P-1 & P-2	A.C.T.	2X4	F	AC-1	
OFFICE	234	OFC.	CARPET TILE	F	CPT-1	RUBBER BASE	4"	F	RB-1	GYP. BD.	EGGSHELL	P-1 & P-2	A.C.T.	2X4	F	AC-1	
OFFICE	235	OFC.	CARPET TILE	F	CPT-1	RUBBER BASE	4"	F	RB-1	GYP. BD.	EGGSHELL	P-1 & P-2	A.C.T.	2X4	F	AC-1	
OFFICE	236	OFC.	CARPET TILE	F	CPT-1	RUBBER BASE	4"	F	RB-1	GYP. BD.	EGGSHELL	P-1 & P-2	A.C.T.	2X4	F	AC-1	
OFFICE	237	OFC.	CARPET TILE	F	CPT-1	RUBBER BASE	4"	F	RB-1	GYP. BD.	EGGSHELL	P-1 & P-2	A.C.T.	2X4	F	AC-1	
OFFICE	238	OFC.	CARPET TILE	F	CPT-1	RUBBER BASE	4"	F	RB-1	GYP. BD.	EGGSHELL	P-1 & P-2	A.C.T.	2X4	F	AC-1	
OFFICE	239	OFC	CARPET TILE	F	CPT-1	RUBBER BASE	4"	F	RB-1	GYP. BD.	EGGSHELL	P-1 & P-2	A.C.T.	2X4	F	AC-1	

8/31/2018 11:22:40 AM

ABBREVIATIONS

ACP	ACOUSTICAL PANEL CEILING
AGL	AGLOMMERATE TILE
BD	BOARD
CMT	CERAMIC MOSAIC TILE
CMU	CONCRETE MASONRY UNIT
CONC	CONCRETE
CT	CERAMIC TILE
EPXY	EPOXY
EXPSD	EXPOSED
F	FACTORY FINISH
FRP	FIBER REINFORCED PLASTIC PANEL
GL	GLASS
GYP	GYPSUM
LTF	LINOLEUM TILE FLOORING
MTL	METAL
EP	EPOXY PAINT
PE	PAINT EGGSHELL
PF	PAINT FLAT
PG	PAINT GLOSS
PNL	PANEL
PSG	PAINT SEMI GLOSS
QT	QUARRY TILE
RESIL	RESILIENT
RTF	RUBBER TILE FLOORING
SF	SATIN FINISH
SLR	SEALER
SV	SHEET VINYL
VCT	VINYL COMPOSITION TILE
VFWC	VINYL FABRIC WALL COVERING

NOTES

INTERIOR WALL AND CEILING FINISH MATERIALS SHALL BE CLASSIFIED IN ACCORDANCE WITH ASTM 84 OR UL 723. SUCH INTERIOR FINISH MATERIALS SHALL BE GROUPED IN THE FOLLOWING CLASSES IN ACCORDANCE WITH THEIR FLAME AND SMOKE-DEVELOPED INDEXES, REFER TO 803.1.1 (SEE EXCEPTION 803.1.2) AND CFC 803.1.

1. INTERIOR WALL AND CEILING FINISHES SHALL BE CLASSIFIED FOR FIRE PERFORMANCE AND SMOKE DEVELOPMENT PER SECTION 803.
2. INTERIOR WALLS AND CEILING FINISHES SHALL BE CLASSIFIED BY OCCUPANCY PER TABLE 803.11 OR BE TESTED PER SECTION 803.1.2 (NFPA 286 CRITERIA).
3. TEXTILE AND VINYL WALL COVERINGS SHALL BE TESTED PER 803.1.3 ACCEPTANCE CRITERIA OF NFPA 265, OR, PER 803.1.4 ACCEPTANCE CRITERIA TESTED TO ASTM E84 OR UL 723 CLASS A FLAME SPREAD INDEX AND PROTECTED BY AN AUTOMATIC FIRE SPRINKLER SYSTEM PER 903.1.1 OR 903.1.1.2.

   EXCEPTION: 803.2 MATERIALS LESS THAN 0.036" THICK APPLIED DIRECTLY NEED NOT BE TESTED.

4. INTERIOR FLOOR FINISHES SHALL COMPLY WITH SECTION 804.
5. DECORATIVE TRIM & MATERIALS SHALL COMPLY WITH SECTION 806.
6. THERMAL AND ACOUSTICAL INSULATION SHALL COMPLY WITH SECTION 719.

CALIFORNA REQUIRES ALL FABRIC USED IN PUBLIC PLACES TO BE REGISTERED WITH THE STATE FIRE MARSHAL AND COMPLY WITH TITLE 19 REQUIREMENTS OF THE CALIFORNIA CODE OF REGULATIONS.

IDENTIFICATION STAMP
DIV. OF THE STATE ARCHITECT
APP. 03-119458 INC:
REVIEWED FOR
SS ☑ FLS ☑ ACS ☑
DATE:05/23/2019

DIVISION OF STATE ARCHITECT
355 South Grand Avenue, Suite 2100
Los Angeles, California. 90012
ph: (213) 897-3995 Fax: (213) 897-3159
agency

tBP
architecture
planning
interiors

LICENSED ARCHITECT
GARY PAIGE MOON
NO. C25409
REN. 7-31-19
STATE OF CALIFORNIA

tBP/Architecture
4611 Teller Avenue
Newport Beach, CA 92660
ph: 949.673.0300 fx: 949.732.3895
architect

consultant

COMPTON COLLEGE
INSTRUCTIONAL BUILDING No. 2

COMPTON COMMUNITY COLLEGE DISTRICT
1111 E. ARTESIA BLVD. COMPTON, CA.
owner

tBP project number : 20998.00
file name:
drawn by: checked by:
04/08/2019
Rev: date: description:

THIS DRAWING AND THE DESIGNS, DEPICTIONS, IDEAS AND OTHER INFORMATION CONTAINED HEREIN CONSTITUTE UNPUBLISHED WORK OF tBP/ARCHITECTURE AND SHALL REMAIN THE PROPERTY OF tBP/ARCHITECTURE IN PERPETUITY. NO PART THEREOF SHALL BE REPRODUCED, DISCLOSED, DISTRIBUTED, SOLD, PUBLISHED OR OTHERWISE USED IN ANY WAY WITHOUT THE ADVANCED EXPRESS WRITTEN CONSENT OF tBP/ARCHITECTURE.

drawing title:
FINISH SCHEDULE

drawing no.: 9.01
drawing of

INTERIOR COLOR SCHEDULE

SPEC. SECTION	MATERIAL	DESIGNATION	MANUFACTURER	COLOR NO.	COLOR NAME	REMARKS
03 10 00 CONCRETE FORMS	ARCHITECTURAL CONCRETE	AC-1	DAVIS COLOR	677	OUTBACK	
03 30 00 CAST-IN-PLACE CONCRETE	CONCRETE FLOORS - POLISHED	C-1				CONCRETE FLOORS W/ ABRASIVE FINISH
	CONCRETE FLOORS - EXPOSED/NATL.	C-2				CONCRETE TREADS/LANDINGS W/ ABRASIVE FINISH & BROOM FINISH. SEE WRITTEN SPECS.
04 21 13.13 BRICK VENEER MASONRY	BRICK VENEER	BR-1	ENDICOTT CLAY PRODUCTS CO. NORMAN	77	MEDIUM IRON SPOT	VELOUR FINISH SEE WRITTEN SPECIFICATIONS
	BRICK VENEER	BR-2	ENDICOTT CLAY PRODUCTS CO. NORMAN		GOLDEN BUFF	SMOOTH FINISH SEE WRITTEN SPECIFICATIONS
	BRICK VENEER	BR-3	ENDICOTT CLAY PRODUCTS CO. NORMAN		MANGANESE BROWN	VELOUR FINISH SEE WRITTEN SPECIFICATIONS
05 73 00 DECORATIVE RAILINGS	STAINLESS STEEL RAIL CAP	SST-				SATIN FINISH
	STAINLESS STEEL DECORATIVE MESH	DM-1	MC NICHOLS TECHNA 3150			74% OPEN AREA
06 41 16 ARCHITECTURAL CASEWORK	PLASTIC LAMINATE	PL-1	WILSONART	4941L-18	COSMIC STRANDZ	CASEWORK, UPPER & LOWER CABINETS VERTICAL SURFACES
	QUARTZSTONE	QS-1	SILESTONE		EROS STELLAR (STELLAR FIRE)	INTERIOR BENCH (SEAT) 2CM THICKNESS, POLISHED W/ MITERED EDGE
	QUARTZSTONE	QS-2	PENTAL QUARTZ	BS124P	COASTAL GREY	INTERIOR BENCH (BASE) POLISHED FINISH
	SOLID SURFACE	SSU-1	FORMICA SOLID SURFACING FORMICA CLASSICS	775	LUNA STORM	CASEWORK COUNTERTOPS
06 64 00 PLASTIC PANELING	FIBERGLASS REINFORCED PLASTIC PANELS	FRP-1	MARLITE P100			SEE WRITTEN SPECIFICATIONS
07 42 13.23 COMPOSITE METAL PANELS	ALUMINUM CLADDING	MP-1	REYNOBOND PE		ANODIC CLEAR	SEE WRITTEN SPECIFICATIONS
	ALUMINUM CLADDING	MP-2	REYNOBOND PE		PEWTER	SEE WRITTEN SPECIFICATIONS
	ALUMINUM CLADDING	MP-3	REYNOBOND PE		BONE WHITE	SEE WRITTEN SPECIFICATIONS -
08 11 13 STEEL DOORS & FRAMES	METAL DOOR	MD-1	-	-	-	PAINT DOOR, P-5 -
	METAL FRAME	MF-1	-	-	-	PAINT FRAME, P-6 -
08 14 16 FLUSH WOOD DOORS	WOOD VENEER	WD-1	SHERMIN WILLIAMS	-	-	- -
08 41 13 ALUM. FRAMED ENTRANCES & STOREFRONTS	ALUMINUM FRAME	AL-1			FACTORY FINISH	SEE WRITTEN SPECIFICATIONS
	INSULATED GLASS - STOREFRONT	GL-1	SOLARBAN 70XL		(2) SOLARGRAY + CLEAR	SEE WRITTEN SPECIFICATIONS
	INSULATED GLASS - STOREFRONT SPANDREL	GL-2	SOLARBAN 70XL			SEE WRITTEN SPECIFICATIONS
	STRUCTURAL GLAZING	GL-3				SEE WRITTEN SPECIFICATIONS
09 24 00 CEMENT PLASTERING	EXTERIOR CEMENT PLASTER SYSTEM	CP-1	LAHABRA, PAREX USA	10400L (X-18052)	SNOWBALL	SEE WRITTEN SPECIFICATIONS
	EXTERIOR CEMENT PLASTER SYSTEM	CP-2	LA HABRA, PAREX USA	T016L (X-18675)	CAFE	SEE WRITTEN SPECIFICATIONS
09 30 13 TILE	PORCELAIN TILE	PT-1	DALTILE FABRIQUE	P685	BLANC LINEN (12"X24")	RESTROOM WALL TILE, FIELD SEE FINISH PLAN FOR TILE PATTERN
	PORCELAIN TILE	PT-2	CROSSVILLE FABRIQUE	P689	NOIR LINEN (12"x24")	RESTROOM FLOOR TILE, FIELD UNPOLISHED, SEE FINISH PLAN FOR TILE PATTERN
	PORCELAIN TILE	PT-3	DALTILE YACHT CLUB	YCO3	COCKPIT (6"x24")	RESTROOM WALL TILE, ACCENT SEE FINISH PLAN FOR TILE PATTERN
	PORCELAIN TILE	PT-4	DALTILE FABRIQUE	P689	NOIR LINEN (6"x24")	RESTROOM WALL TILE, ACCENT SEE SHEET 9.-- FOR TILE PATTERN
	ALUMINUM COVE TRIM	ACT-1	SCHLUTER SYSTEMS DILEX AHK	-	SATIN ANODIZED ALUMINUM	
	GROUT	G-1	MAPEI	103	COBBLESTONE	RESTROOM WALL TILE GROUT
	GROUT	G-2	MAPEI	19	PEARL GRAY	RESTROOM FLOOR TILE GROUT
	STONE THRESHOLD	T-1	-			
09 51 13 ACOUSTICAL CEILING PANELS	ACOUSTICAL CEILING PANELS	-	ARMSTRONG CIRRUS SECOND LOOK	-	WHITE	SEE WRITTEN SPECIFICATIONS
	ACOUSTICAL CEILING PANELS	-	ARMSTRONG CIRRUS SECOND LOOK	-	WHITE	2X4 W/ 6" LINEAR PATTERN SEE WRITTEN SPECIFICATIONS
09 65 13 RESILIENT BASE	RUBBER BASE	RB-1	JOHNSONITE TRADITIONAL WALL BASE	20	CHARCOAL	
09 65 43 LINOLEUM FLOORING	LINOLEUM SHEET FLOORING	LF-1	JOHNSONITE, HARMONIUM VENETO	A00204	ICED SLATE	SEE FLOOR FINISH PLAN FOR FLOOR PATTERNS/LOCATIONS
	LINOLEUM SHEET FLOORING	LF-2	JOHNSONITE, HARMONIUM VENETO	686	DEEP SPACE	SEE FLOOR FINISH PLAN FOR FLOOR PATTERNS/LOCATIONS
	LINOLEUM SHEET FLOORING	LF-3	JOHNSONITE, HARMONIUM VENETO	740	BLAZE	SEE FLOOR FINISH PLAN FOR FLOOR PATTERNS/LOCATIONS
	STATIC DISSIPATIVE TILE	VCT-1	ARMSTRONG STATIC DISSIPATIVE EXCELON	51956	FOSSIL GRAY	
09 68 13 TILE CARPETING	CARPET TILE	CPT-1	TANDUS ISO 04536	48201	WIRED	OFFICE CARPET VERTICAL ASHLAR INSTALLATION
	CARPET TILE	CPT-2	TANDUS GEO TILE 00979	00154	CHARCOAL	INTERIOR WALK-OFF MATS MODULAR INSTALLATION
09 72 00 WALL COVERINGS	PROJECTION DRY ERASE WALL COVERING	WC-1	KOROSEAL, WALLTALKERS PROJECTABLE MAG-RITE	M2PR-00	WHITE	CLASSROOM INTERIOR WALL SEE INTERIOR ELEVATIONS FOR LOCATIONS
09 90 00 PAINT	PAINT	P-1	SHERMIN WILLIAMS COLOR LIFE	CLW 1028W	SIGNAL MOUNTAIN	WALLS (FIELD)
	PAINT	P-2	SHERMIN WILLIAMS COLOR LIFE	CL3172W	CHARLESTON	WALLS (ACCENT)
	PAINT	P-3	SHERMIN WILLIAMS COLOR LIFE	CL3016A	GIANT	WALLS (ACCENT)
	PAINT	P-4	DUNN EDWARDS	DEA150	SCARLET PAST	WALLS (ACCENT)
	PAINT	P-5	-	-	-	METAL DOORS
	PAINT	P-6	-	-	-	METAL DOOR FRAMES
	PAINT	P-7	-	-	-	EXPOSED CEILING
	PAINT	P-8	-	-	-	EXPOSED INTERIOR STEEL

INTERIOR COLOR SCHEDULE

SPEC. SECTION	MATERIAL	DESIGNATION	MANUFACTURER	COLOR NO.	COLOR NAME	REMARKS
09 96 00 HIGH PERFORMANCE COATINGS	EXTER. HIGH PERFORMANCE COATING STEEL SUBSTRATES	HP-1	TNEMEC	41 MT	SILVER	SEE WRITTEN SPECIFICATIONS
	EXTER. HIGH PERFORMANCE COATING GALVANIZED METAL SUBSTRATES	HP-2	TNEMEC			SEE WRITTEN SPECIFICATIONS
	INTER. HIGH PERFORMANCE COATING STEEL SUBSTRATES	HP-3	TNEMEC			SEE WRITTEN SPECIFICATIONS
	INTER. HIGH PERFORMANCE COATING GALVANIZED METAL SUBSTRATES	HP-4	TNEMEC			SEE WRITTEN SPECIFICATIONS
10 11 00 VISUAL DISPLAY UNITS	MARKER BOARD	MB-1	CLARIDGE CONCEPT	No. 100	LCS WHITE	
	TACKBOARDS	TB-1	CLARIDGE CONCEPT	1113	STEEL GRAY	
10 12 00 DISPLAY CASES	ALUMINUM SURFACE MOUNTED DISPLAY CASE	DC-1	WADDELL FURNITURE		CHAMPAGNE	SEE WRITTEN SPECIFICATIONS
10 14 19 DIMENSIONAL LETTER SIGNAGE	DIMENSIONAL CHARACTERS STAINLESS STEEL	-			STAINLESS STEEL, NO. 4	SEE WRITTEN SPECIFICATIONS
	DIMENSIONAL LETTER SIGNAGE	-				SEE WRITTEN SPECFICATIONS
10 21 13.17 PHENOLIC CORE TOILET COMPARTMENT	TOILET COMPARTMENTS	TC-1	BOBRICK SIERRA SERIES 1090	SC04	FOREST GREEN	
10 22 39 FOLDING PANEL PARTITIONS	VINYL FABRIC	FP-1	HUFCOR CAIRN PATTERN	44-557	PEBBLE	
	METAL TRIM & SEAL	FP-2	HUFCOR -			
	MARKERBOARD (INSET)	FP-3	HUFCOR		WHITE	
10 71 10 EXTERIOR SUN CONTROL DEVICES	SUN CONTROL LOUVER	SL-1	ARCADIA BSD001, VERTICAL			SEE WRITTEN SPECIFICATIONS
	SUN CONTROL LOUVER	SL-2	ARCADIA BSD009, HORIZONTAL			SEE WRITTEN SPECIFICATIONS
	AIRFOIL LOUVER	LV-1	C-S GROUP AIRFOIL LOUVER		SILVER METALLIC (LIGHT GREY)	SEE WRITTEN SPECIFICATIONS
11 52 13 PROJECTION SCREENS	PROJECTION SCREENS	PS-1				-
11 61 43 STAGE CURTAINS	STAGE CURTAIN VELOUR	-			BLACK	SEE WRITTEN SPECIFICATIONS
	STAGE CURTAIN NEW OXFORD	-	- -	-	CHROMA KEY GREEN	SEE WRITTEN SPECIFICATIONS
	STAGE CURTAIN LENO	-	- -	-	60% GREY	SEE WRITTEN SPECIFICATIONS
12 24 00 WINDOW SHADES	ROLLER SHADES	RS-1	SKYCO SHEERWEAVE, STYLE 2390 , 5%	P14	OYSTER PEARL GREY	INTERIOR ROLLER SHADES
	ROLLER SHADES	RS-2	SKYCO AVILA TWILIGHT	0015	KHAKI	INTERIOR BLACK-OUT ROLLER SHADES
12 48 13 ENTRANCE FLR MATS & FRAMES	ENTRANCE FLOOR MATS	EFM-1	MATS INC GRATE MAT XT FOOT GRILLE		CHARCOAL	
12 48 16 ENTRANCE FLOOR GRILLES	ENTRANCE FLOOR GRILLES	-	C/S GROUP			SEE WRITTEN SPECIFICATIONS
14 24 23 HYDRAULIC ELEVATOR	ELEVATOR WALL PANEL	EWP-1	- -	-	-	SIDE AND REAR WALL PANELS (LAMINATE)
	ELEVATOR WALL REVEALS	-		-	SATIN STAINLESS STEEL, NO. 4	SEE WRITTEN SPECIFICATIONS
	ELEVATOR FLOOR	PT-2	DAL TILE FABRIQUE	P689	NOIR LINEN (12"X24")	PORCELAIN FLOOR TILE SEE WRITTEN SPECIFCATIONS
	ELEVATOR CEILING	-	-	-	STAINLESS STEEL, NO. 8	SEE WRITTEN SPECIFICATIONS
	HANDRAILS	-	-	-	STAINLESS STEEL, NO. 4	

TYPICAL FINISH NOTES

1. SUBMIT MANUFACTURER'S STANDARD COLORS FOR COLOR SELECTION
2. ALL INTERIOR FINISHES SHALL COMPLY W/ THE FLAME SPREAD AND SANITATION REQUIREMENTS OF CHAPTER 8, C.B.C.

IDENTIFICATION STAMP
DIV. OF THE STATE ARCHITECT
APP. 03-119458 INC:
REVIEWED FOR
SS ☑ FLS ☑ ACS ☑
DATE:05/23/2019

DIVISION OF STATE ARCHITECT
355 South Grand Avenue, Suite 2100
Los Angeles, California. 90012
ph: (213) 897-3995 Fax: (213) 897-3159
agency

tBP architecture planning interiors

LICENSED ARCHITECT GARY PAIGE MOON NO. C25409 REN. 7-31-19 STATE OF CALIFORNIA

tBP/Architecture
4611 Teller Avenue
Newport Beach, CA 92660
ph: 949.673.0300 fx: 949.732.3895
architect

consultant

COMPTON COLLEGE
INSTRUCTIONAL BUILDING No. 2

COMPTON COMMUNITY COLLEGE DISTRICT
1111 E. ARTESIA BLVD. COMPTON, CA.

owner

tBP project number : 20998.00
file name: Dtl-0902_Color_Sched.dwg
drawn by: checked by:
04/08/2019
Rev: date: description:

THIS DRAWING AND THE DESIGNS, DEPICTIONS, IDEAS AND OTHER INFORMATION CONTAINED HEREIN CONSTITUTE UNPUBLISHED WORK OF tBP/ARCHITECTURE AND SHALL REMAIN THE PROPERTY OF tBP/ARCHITECTURE IN PERPETUITY. NO PART THEREOF SHALL BE REPRODUCED, DISCLOSED, DISTRIBUTED, SOLD, PUBLISHED OR OTHERWISE USED IN ANY WAY WITHOUT THE ADVANCED EXPRESS WRITTEN CONSENT OF tBP/ARCHITECTURE.

drawing title:
INT. COLOR SCHEDULE

drawing no.:
9.02
drawing of

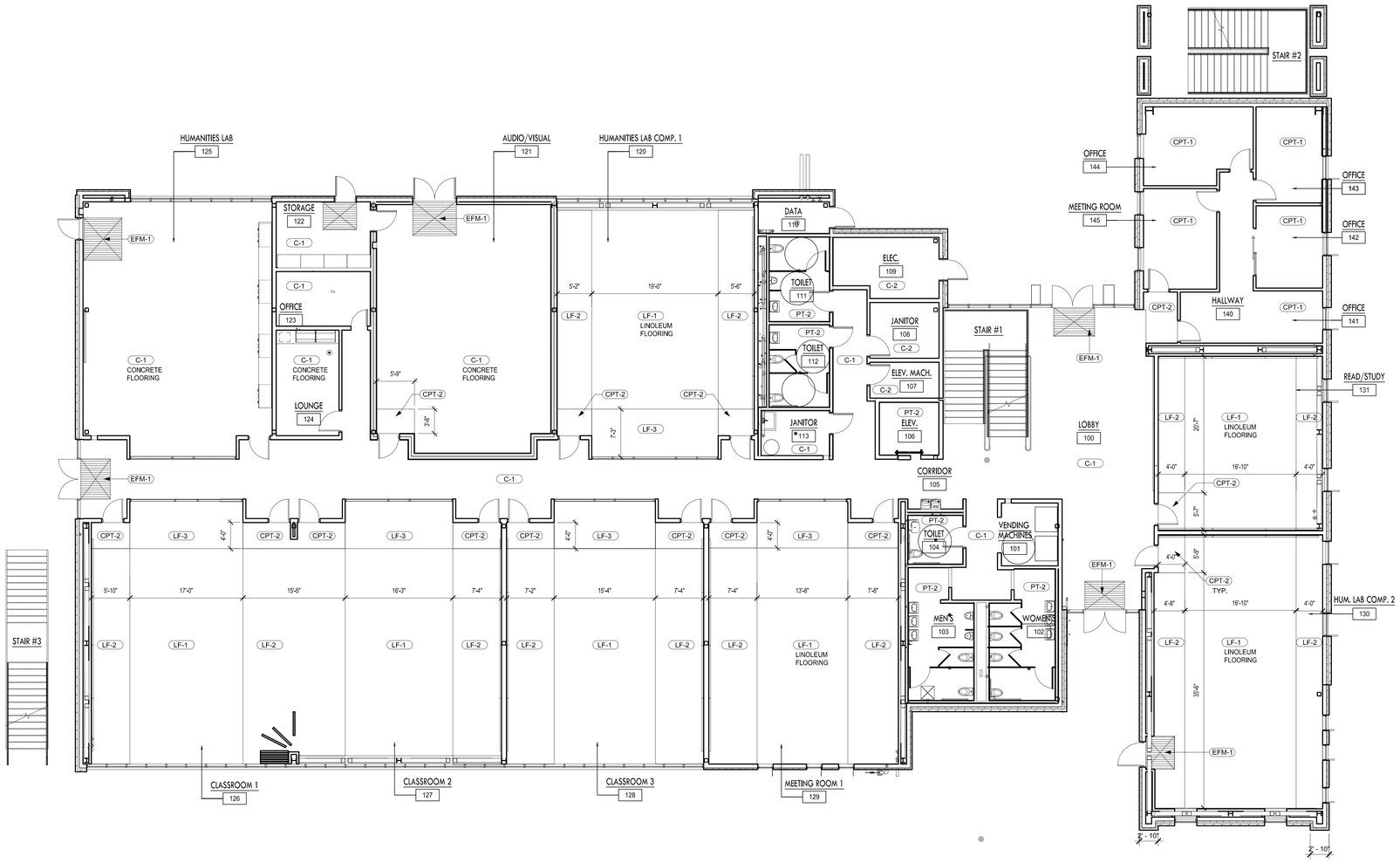

1ST FLOOR FINISH PLAN

SCALE: 1/8" = 1'-0"

NORTH

IDENTIFICATION STAMP
DIV. OF THE STATE ARCHITECT
APP. 03-119458 INC:
REVIEWED FOR
SS ☑ FLS ☑ ACS ☑
DATE:05/23/2019

DIVISION OF STATE ARCHITECT
355 South Grand Avenue, Suite 2100
Los Angeles, California. 90012
ph: (213) 897-3995 Fax: (213) 897-3159
agency

tBP architecture planning interiors

LICENSED ARCHITECT
GARY PAIGE MOON
NO. C25409
REV. 7-31-19
STATE OF CALIFORNIA

tBP/Architecture
4611 Teller Avenue
Newport Beach, CA 92660
ph: 949.673.0300 fx: 949.732.3895
architect

consultant

COMPTON COLLEGE
INSTRUCTIONAL BUILDING No. 2
COMPTON COMMUNITY COLLEGE DISTRICT
1111 E. ARTESIA BLVD. COMPTON, CA.

owner

tBP project number : 20998.00

file name:DTL-09-03_1ST FLOOR FINISH PLAN.dwg

drawn by: checked by:

04/08/2019

Rev:	date:	description:

THIS DRAWING AND THE DESIGNS, DEFINITIONS, IDEAS AND OTHER INFORMATION CONTAINED HEREIN CONSTITUTE UNPUBLISHED WORK OF tBP/ARCHITECTURE AND SHALL REMAIN THE PROPERTY OF tBP/ARCHITECTURE IN PERPETUITY. NO PART THEREOF SHALL BE REPRODUCED, DISCLOSED, DISTRIBUTED, SOLD, PUBLISHED OR OTHERWISE USED IN ANY WAY WITHOUT THE ADVANCED EXPRESS WRITTEN CONSENT OF tBP/ARCHITECTURE.

drawing title:
1ST FLOOR FINISH PLAN

drawing no.:
9.03
drawing of

lwg

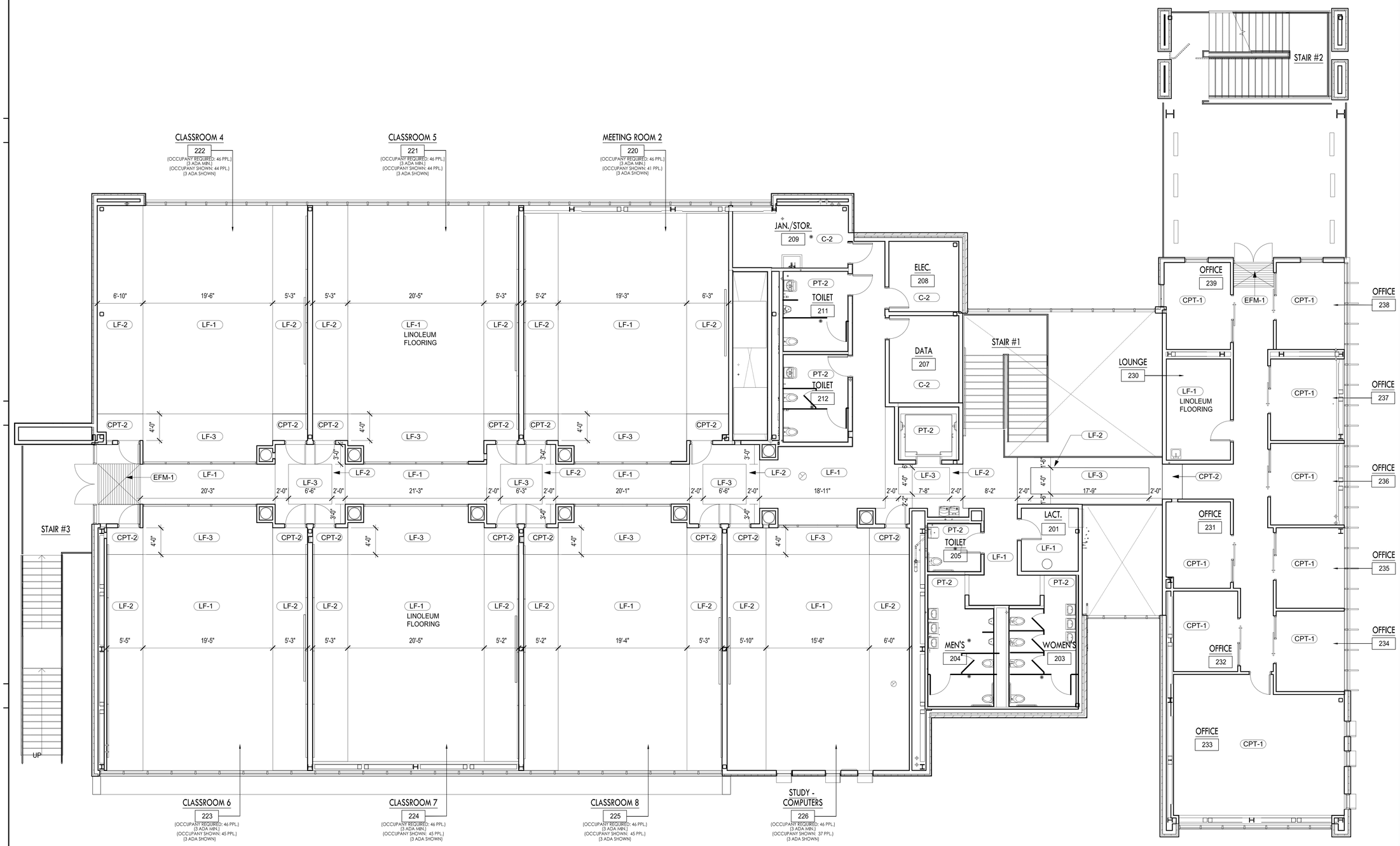

2ND FLOOR FINISH PLAN

SCALE: 1/8" = 1'-0"

NORTH

IDENTIFICATION STAMP
DIV. OF THE STATE ARCHITECT
APP. 03-119458 INC:
REVIEWED FOR
SS ☑ FLS ☑ ACS ☑
DATE:05/23/2019

DIVISION OF STATE ARCHITECT
355 South Grand Avenue, Suite 2100
Los Angeles, California. 90012
ph: (213) 897-3995 Fax: (213) 897-3159
agency

tBP
architecture
planning
interiors

LICENSED ARCHITECT
STATE OF CALIFORNIA
NO. C25409
REN. 7-31-19

tBP/Architecture
4611 Teller Avenue
Newport Beach, CA 92660
ph: 949.673.0300 fx: 949.732.3895
architect

consultant

COMPTON COLLEGE
INSTRUCTIONAL BUILDING No. 2
COMPTON COMMUNITY COLLEGE DISTRICT
1111 E. ARTESIA BLVD. COMPTON, CA.
owner

tBP project number : 20998.00
file name: DTL-09-03_2ND FLOOR FINISH PLAN.dwg
drawn by: checked by:
04/08/2019

Rev:	date:	description:

THIS DRAWING AND THE DESIGNS, DEFICTIONS, IDEAS AND OTHER INFORMATION CONTAINED HEREIN, CONSTITUTE UNPUBLISHED WORK OF tBP/ARCHITECTURE AND SHALL REMAIN THE PROPERTY OF tBP/ARCHITECTURE IN PERPETUITY. NO PART THEREOF SHALL BE REPRODUCED, DISCLOSED, DISTRIBUTED, SOLD, PUBLISHED OR OTHERWISE USED IN ANY WAY WITHOUT THE ADVANCED EXPRESS WRITTEN CONSENT OF tBP/ARCHITECTURE.

drawing title:
2ND FLOOR FINISH PLAN

drawing no.:
9.04
drawing of

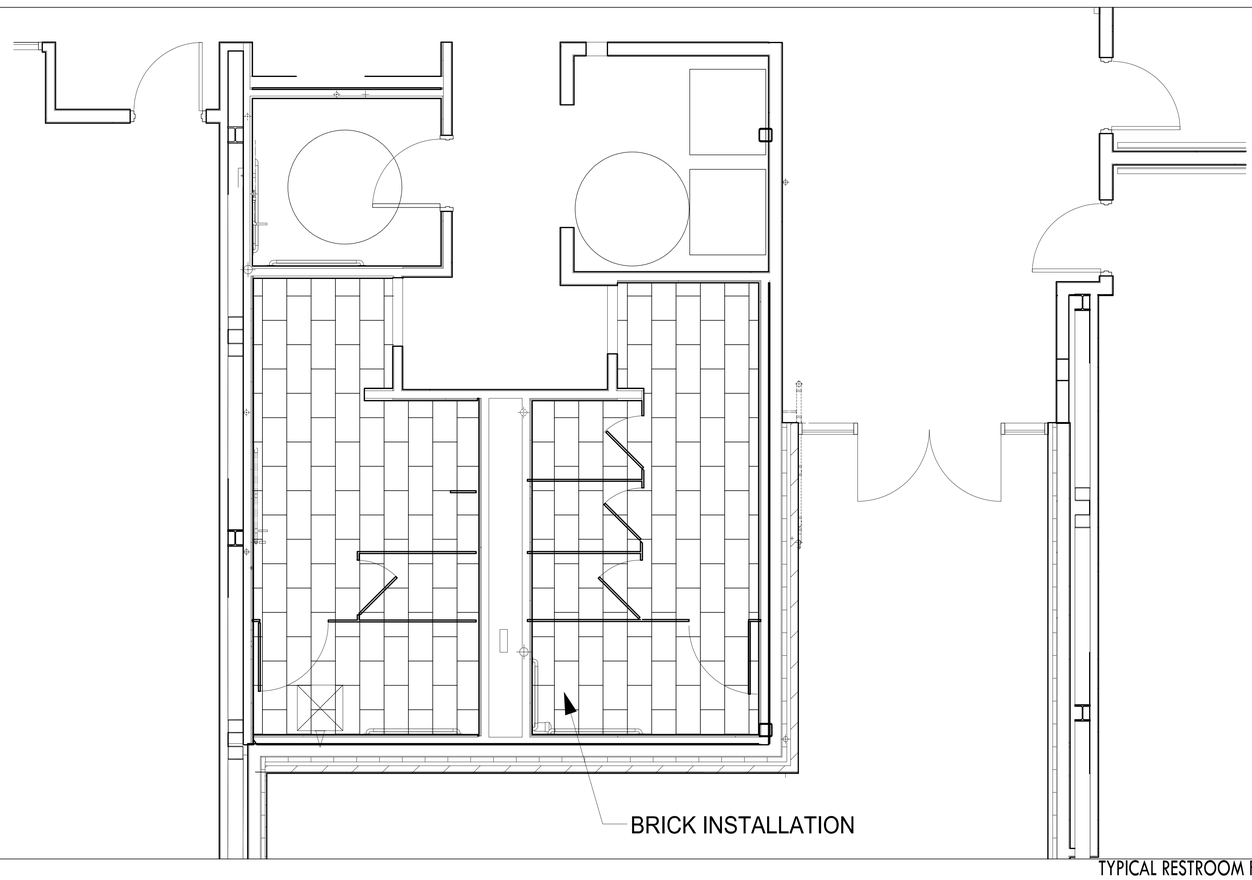

TYPICAL RESTROOM FLOOR TILE PATTERN

SCALE: 3/8" = 1'-0"

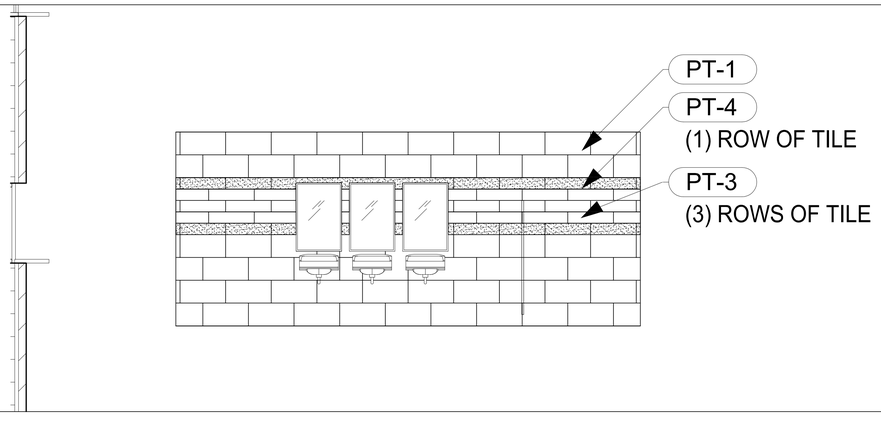

TYPICAL RESTROOM WALL TILE PATTERN

SCALE: 3/8" = 1'-0"

IDENTIFICATION STAMP
DIV. OF THE STATE ARCHITECT
APP. 03-119458 INC:
REVIEWED FOR
SS ☑ FLS ☑ ACS ☑
DATE:05/23/2019

DIVISION OF STATE ARCHITECT
355 South Grand Avenue, Suite 2100
Los Angeles, California. 90012
ph: (213) 897-3995 Fax: (213) 897-3159
agency

tBP architecture planning interiors

LICENSED ARCHITECT
GARY PAIGE MOON
NO. C25409
REN. 7-31-19
STATE OF CALIFORNIA

tBP/Architecture
4611 Teller Avenue
Newport Beach, CA 92660
ph: 949.673.0300 fx: 949.732.3895
architect

consultant

COMPTON COLLEGE
INSTRUCTIONAL BUILDING No. 2

COMPTON COMMUNITY COLLEGE DISTRICT
1111 E. ARTESIA BLVD. COMPTON, CA.

owner

tBP project number : 20998.00

file name: DTL-0905_RR TILE PATTERN PLAN.dwg

drawn by: checked by:

04/08/2019

Rev:	date:	description:

THIS DRAWING AND THE DESIGNS, DEPICTIONS, IDEAS AND OTHER INFORMATION CONTAINED HEREIN CONSTITUTE UNPUBLISHED WORK OF tBP/ARCHITECTURE AND SHALL REMAIN THE PROPERTY OF tBP/ARCHITECTURE IN PERPETUITY. NO PART THEREOF SHALL BE REPRODUCED, DISCLOSED, DISTRIBUTED, SOLD, PUBLISHED OR OTHERWISE USED IN ANY WAY WITHOUT THE ADVANCED EXPRESS WRITTEN CONSENT OF tBP/ARCHITECTURE.

drawing title:
RESTROOM WALL &
FLOOR TILE PATTERN PLAN

drawing no.:
9.05
drawing of

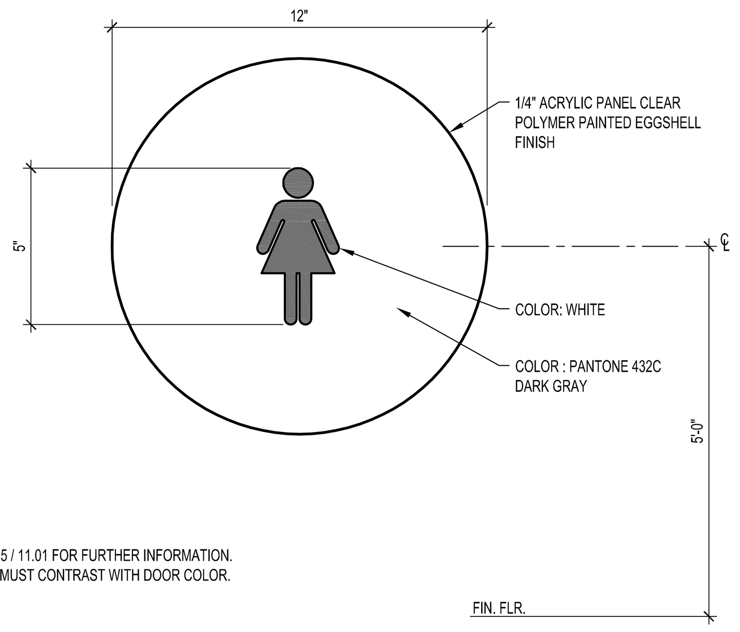

NOTES :
1. SEE DETAIL 5 / 11.01 FOR FURTHER INFORMATION.
2. DOOR SIGN MUST CONTRAST WITH DOOR COLOR.

DOOR MOUNTED TOILET ROOM SIGN — 1
SCALE: 3" = 1'-0"

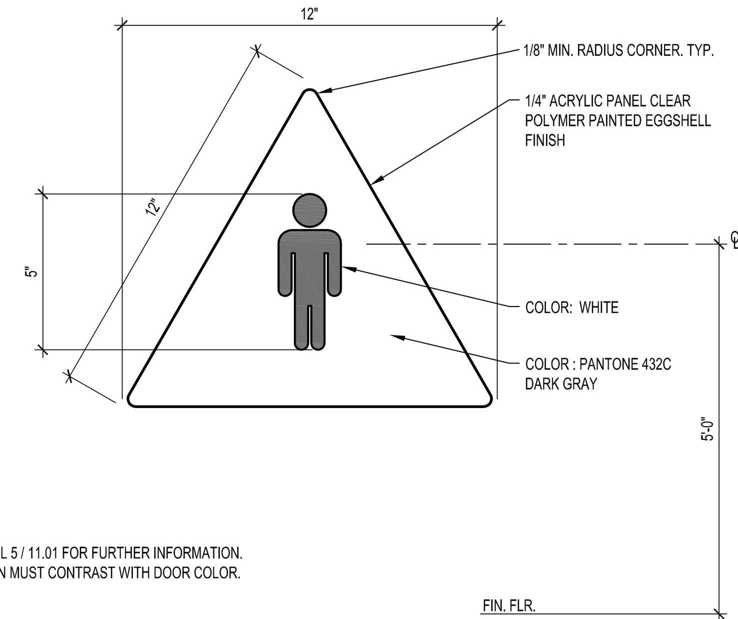

NOTES :
1. SEE DETAIL 5 / 11.01 FOR FURTHER INFORMATION.
2. DOOR SIGN MUST CONTRAST WITH DOOR COLOR.

DOOR MOUNTED TOILET ROOM SIGN — 2
SCALE: 3" = 1'-0"

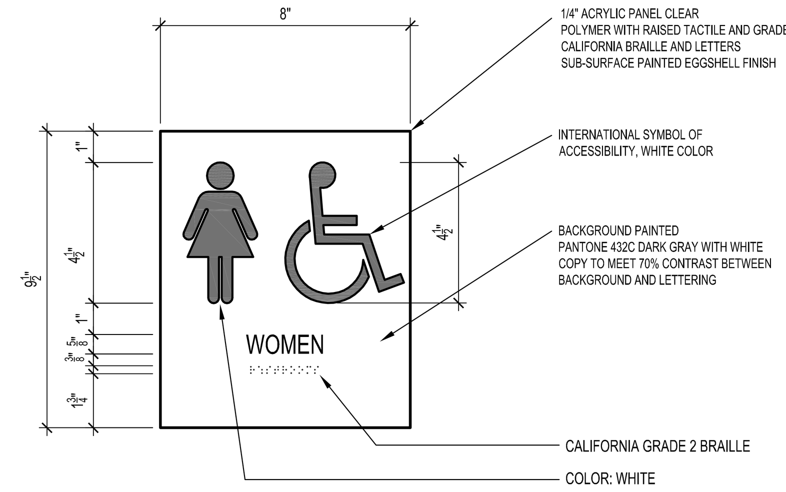

NOTES :
1. SEE DETAIL 5 / 11.01 FOR FURTHER INFORMATION.
2. DOOR SIGN MUST CONTRAST WITH DOOR COLOR.
3. REFER TO FLOOR PLAN AND DOOR SCHEDULE FOR ROOM NAMES
4. FONT : FRUTIGER 55 ROMAN
5. CENTER TEXT AND CENTER BRAILLE UNDER TEXT (TYP.)

WALL-MOUNTED TOILET ROOM SIGNAGE — 3
SCALE: 3" = 1'-0"

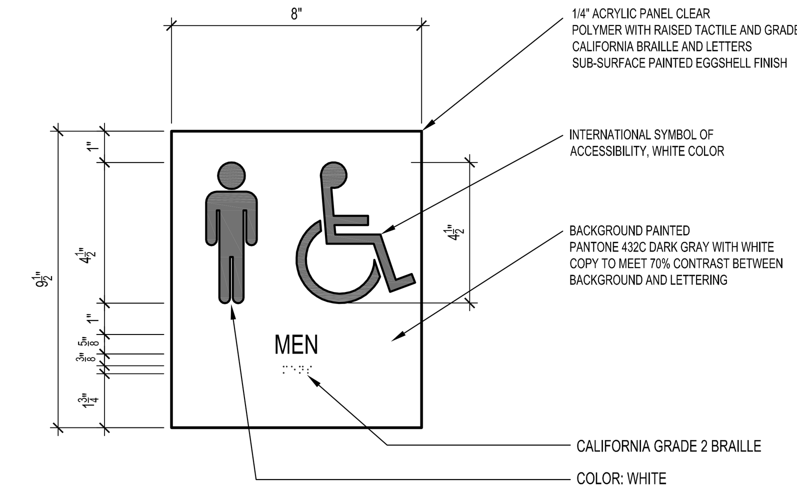

NOTES :
1. SEE DETAIL 5 / 11.01 FOR FURTHER INFORMATION.
2. DOOR SIGN MUST CONTRAST WITH DOOR COLOR.
3. REFER TO FLOOR PLAN AND DOOR SCHEDULE FOR ROOM NAMES
4. FONT : FRUTIGER 55 ROMAN
5. CENTER TEXT AND CENTER BRAILLE UNDER TEXT (TYP.)

WALL-MOUNTED TOILET ROOM SIGNAGE — 4
SCALE: 3" = 1'-0"

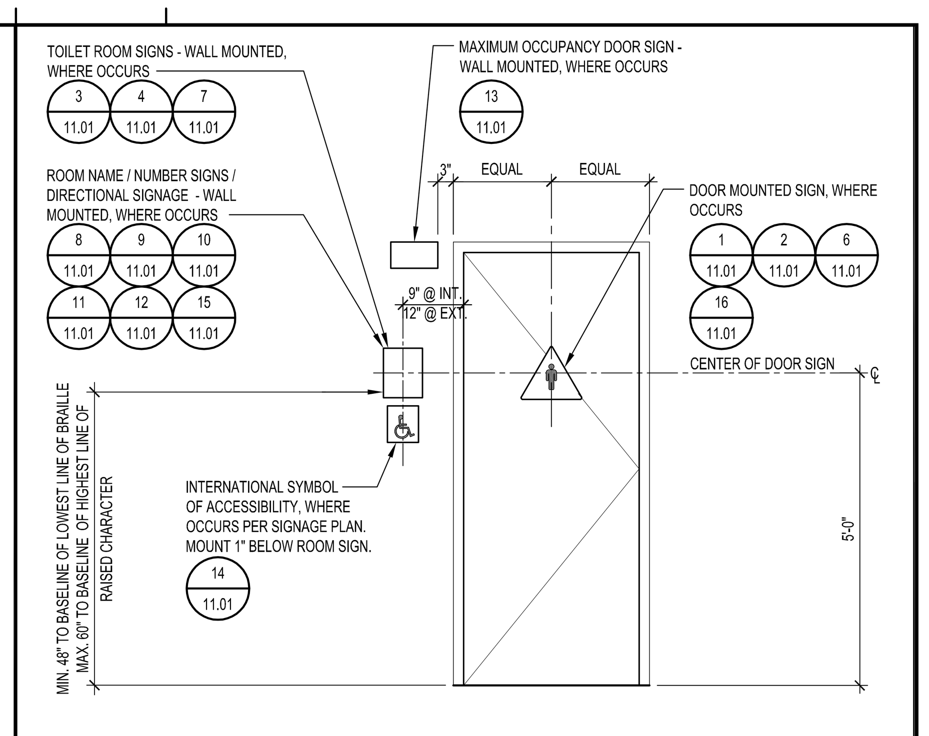

NOTES :
MOUNT SIGN ON THE WALL ADJACENT TO LATCH SIDE OF DOOR, AT HEIGHT NOTED IN DETAIL ABOVE. WHERE THERE IS NO WALL SPACE ON LATCH SIDE OF DOOR, PLACE SIGNS ON NEAREST ADJACENT WALL, PREFERABLY ON THE RIGHT.

SIGNAGE LOCATION LEGEND — 5
SCALE: 1/2" = 1'-0"

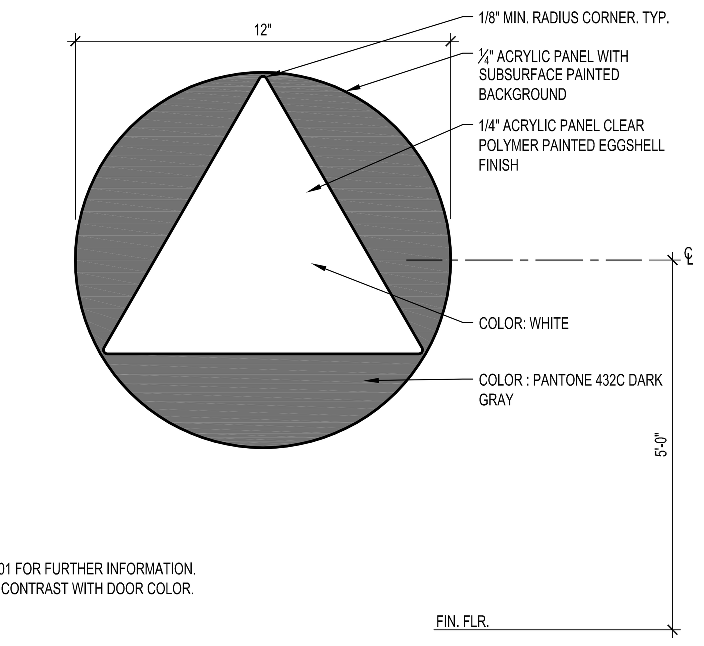

NOTES :
1. SEE DETAIL 5 / 11.01 FOR FURTHER INFORMATION.
2. DOOR SIGN MUST CONTRAST WITH DOOR COLOR.

DOOR MOUNTED TOILET ROOM SIGN — 6
SCALE: 3" = 1'-0"

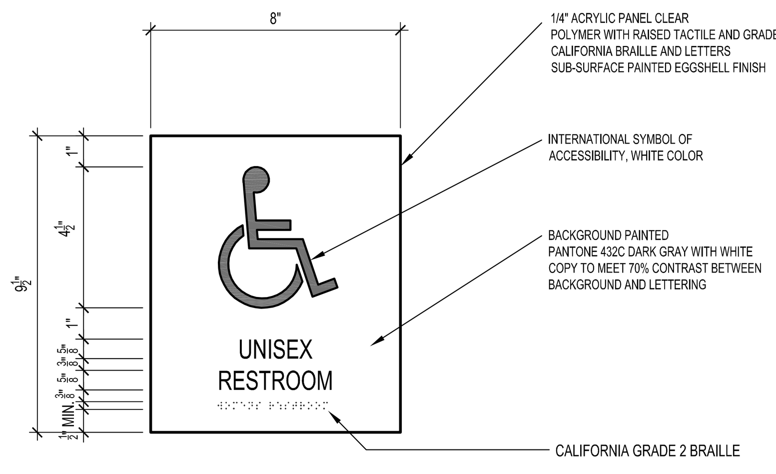

NOTES :
1. SEE DETAIL 5 / 11.01 FOR FURTHER INFORMATION.
2. DOOR SIGN MUST CONTRAST WITH DOOR COLOR.
3. REFER TO FLOOR PLAN AND DOOR SCHEDULE FOR ROOM NAMES
4. FONT : FRUTIGER 55 ROMAN
5. CENTER TEXT AND CENTER BRAILLE UNDER TEXT (TYP.)

WALL MOUNTED TOILET ROOM SIGN — 7
SCALE: 3" = 1'-0"

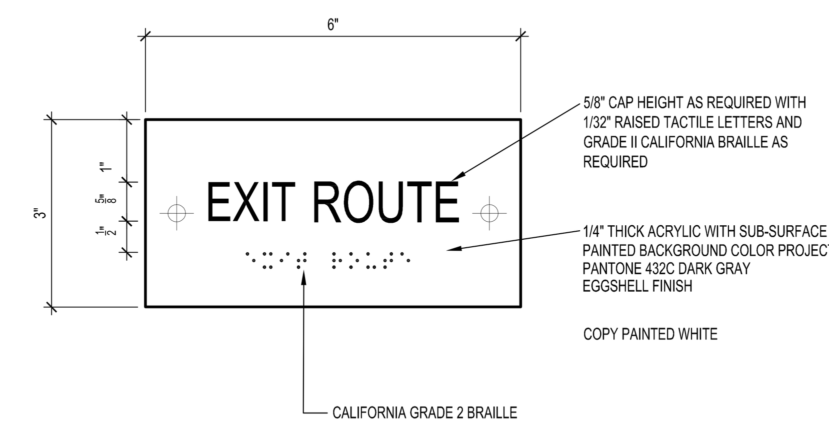

NOTES :
1. SEE DETAIL 5 / 11.01 FOR FURTHER INFORMATION.
2. DOOR SIGN MUST CONTRAST WITH DOOR COLOR.
3. FONT : FRUTIGER 55 ROMAN. OPEN LETTER SPACING TO MEET ADA VISUAL REQUIREMENTS

TACTILE EXIT ROUTE SIGNAGE — 8
SCALE: HALF

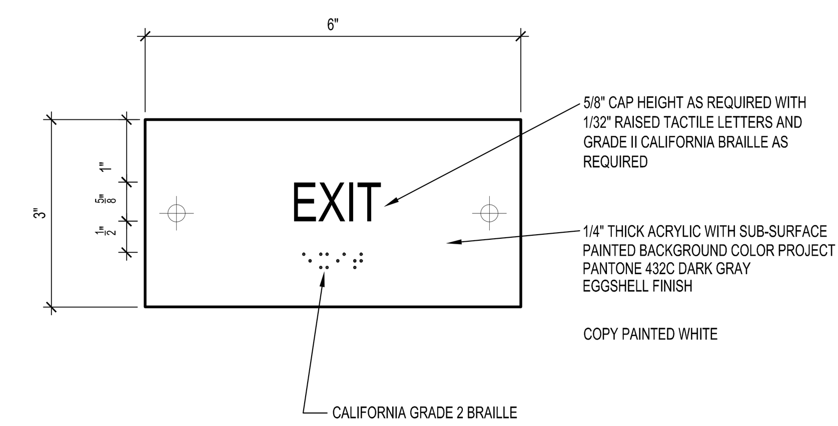

NOTES :
1. SEE DETAIL 5 / 11.01 FOR FURTHER INFORMATION.
2. DOOR SIGN MUST CONTRAST WITH DOOR COLOR.
3. FONT : FRUTIGER 55 ROMAN. OPEN LETTER SPACING TO MEET ADA VISUAL REQUIREMENTS

TACTILE EXIT SIGNAGE — 9
SCALE: HALF

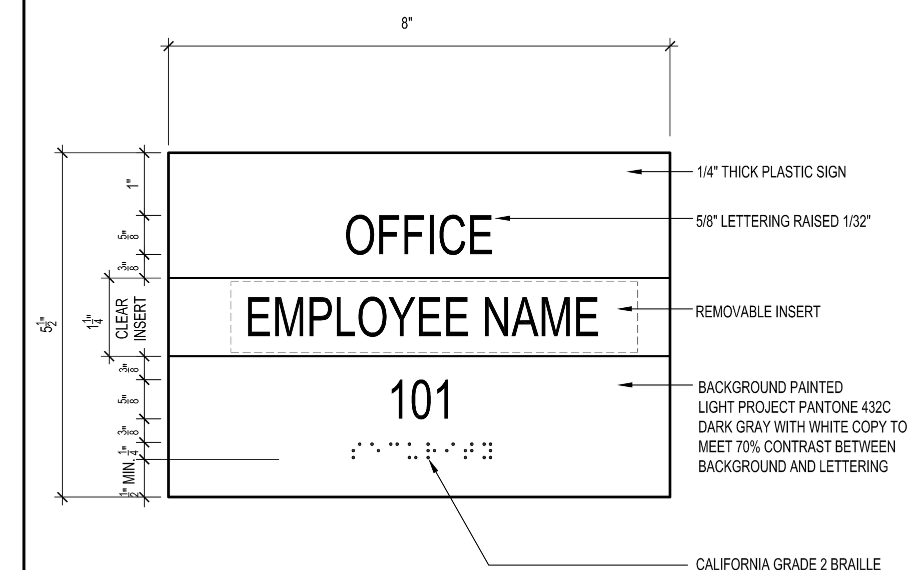

NOTES :
1. SEE DETAIL 5 / 11.01 FOR FURTHER INFORMATION.
2. DOOR SIGN MUST CONTRAST WITH DOOR COLOR.
3. FONT : FRUTIGER 55 ROMAN. OPEN LETTER SPACING TO MEET ADA VISUAL REQUIREMENTS
4. VERIFY TEXT W/ DOOR SCHEDULE, CONFIRM W/ OWNER

ROOM NAME / NUMBER SIGN WITH INSERT — 10
SCALE: HALF

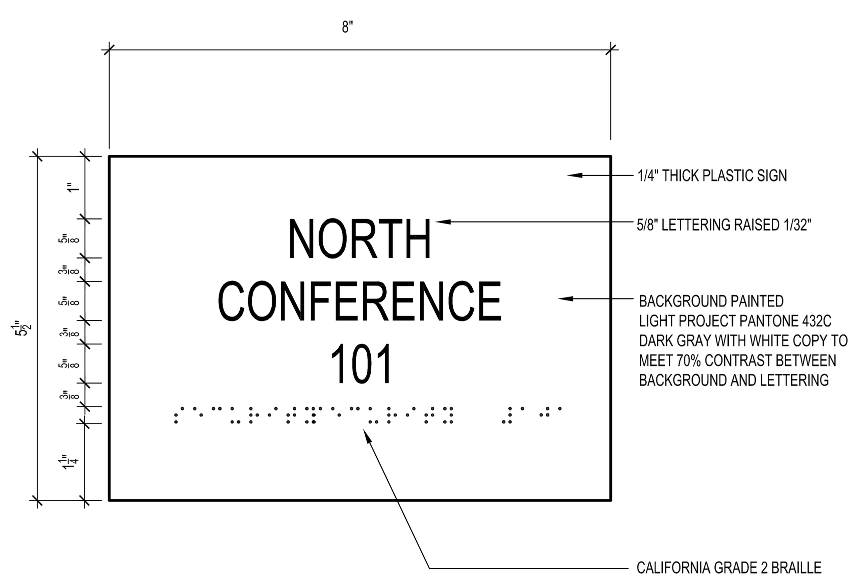

NOTES :
1. SEE DETAIL 5 / 11.01 FOR FURTHER INFORMATION.
2. DOOR SIGN MUST CONTRAST WITH DOOR COLOR.
3. FONT : FRUTIGER 55 ROMAN. OPEN LETTER SPACING TO MEET ADA VISUAL REQUIREMENTS
4. VERIFY TEXT W/ DOOR SCHEDULE, CONFIRM W/ OWNER

ROOM NAME / NUMBER SIGN WALL MOUNTED — 11
SCALE: HALF

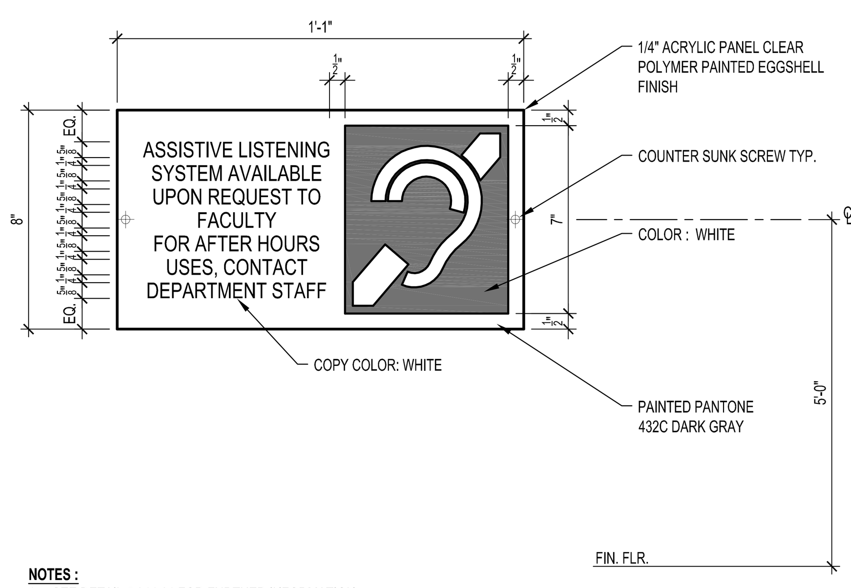

NOTES :
1. SEE DETAIL 5 / 11.01 FOR FURTHER INFORMATION.
2. FONT : FRUTIGER 55 ROMAN

ASSISTIVE-LISTENING DEVICE SIGNAGE — 12
SCALE: 3" = 1'-0"

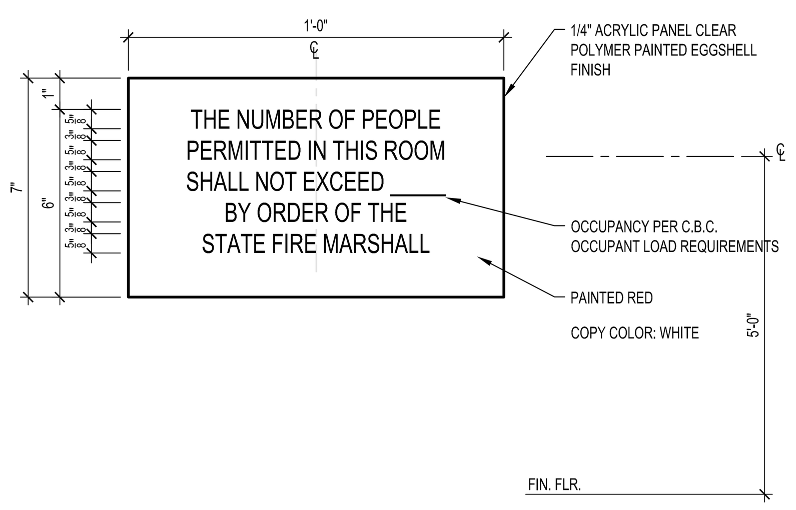

NOTES :
1. SEE DETAIL 5 / 11.01 FOR FURTHER INFORMATION.
2. DOOR SIGN MUST CONTRAST WITH DOOR COLOR.
3. FONT : FRUTIGER 55 ROMAN
4. REF. TO PLANS FOR MAX. OCCUPANCY LOAD QUANTITIES

MAXIMUM OCCUPANCY SIGN — 13
SCALE: 3" = 1'-0"

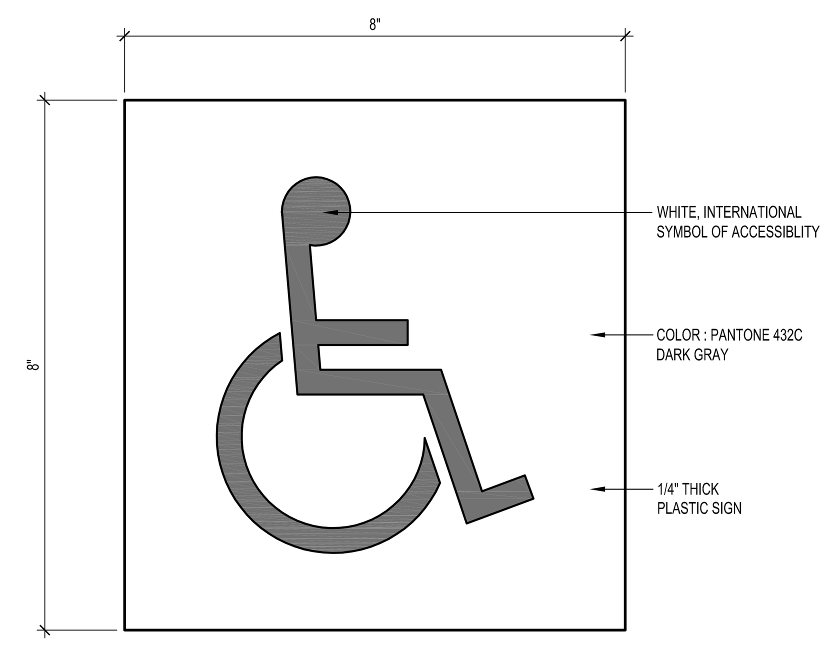

INTERNATIONAL SYMBOL OF ACCESSIBILITY — 14
SCALE: HALF

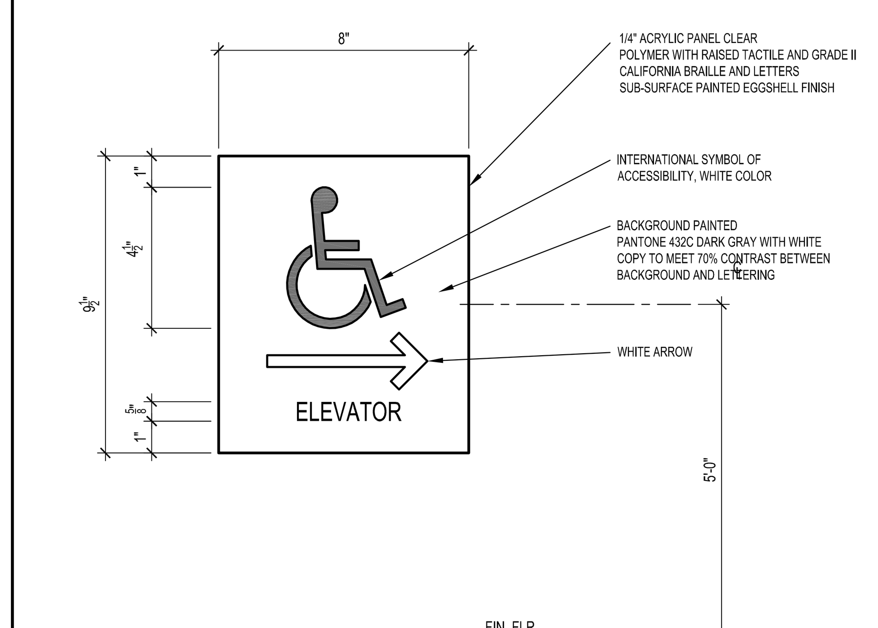

NOTES :
1. SEE DETAIL 5 / 11.01 FOR FURTHER INFORMATION.
3. FONT : FRUTIGER 55 ROMAN

ELEVATOR ROUTE SIGNAGE — 15
SCALE: 3" = 1'-0"

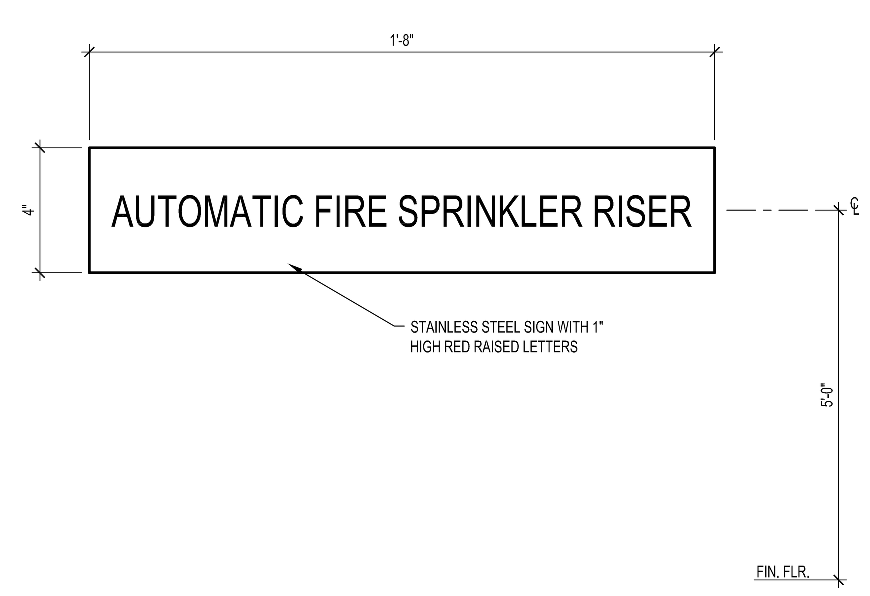

NOTES :
1. SEE DETAIL 5 / 11.01 FOR FURTHER INFORMATION.
2. DOOR SIGN MUST CONTRAST WITH DOOR COLOR.
3. FONT : FRUTIGER 55 ROMAN

FIRE SPRINKLER RISER INSIDE SIGN — 16
SCALE: 3" = 1'-0"

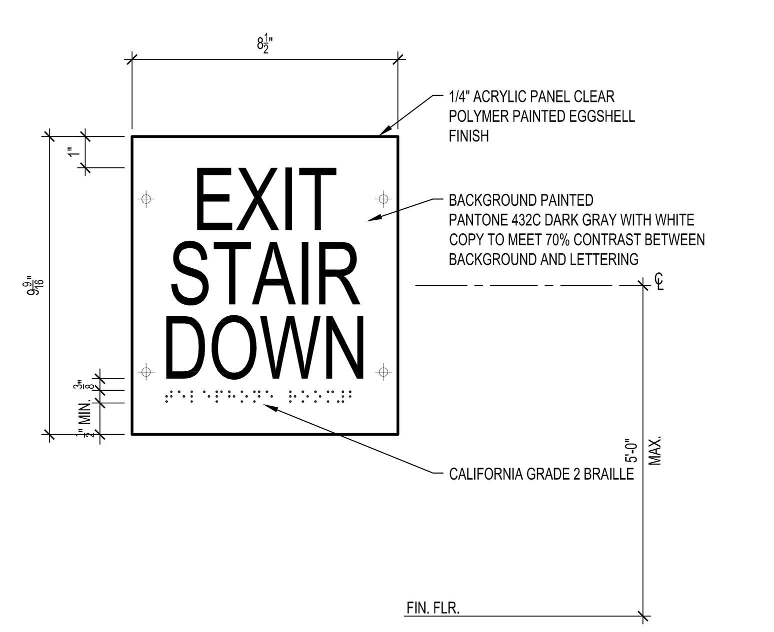

NOTES :
1. SEE DETAIL 5 / 11.01 FOR FURTHER INFORMATION.
2. DOOR SIGN MUST CONTRAST WITH DOOR COLOR.
3. FONT : FRUTIGER 55 ROMAN

TACTILE EXIT ROUTE SIGNAGE — 18
SCALE: 3" = 1'-0"

TYPICAL SIGNAGE NOTES

1. TACTILE CHARACTER TYPE: TACTILE CHARACTERS ON SIGNS SHALL BE RAISED 1/32" MINIMUM AND SHALL BE SANS SERIF UPPERCASE CHARACTERS ACCOMPANIED BY CONTRACTED (GRADE 2) BRAILLE. CBC SECTION 11B-703.3
2. TACTILE CHARACTER SIZE: RAISED CHARACTERS SHALL BE A MINIMUM OF 5/8" AND A MAXIMUM OF 2" HIGH. CBC SECTION 11B-703.2
3. FINISH AND CONTRAST: CONTRAST BETWEEN CHARACTERS, SYMBOLS AND THEIR BACKGROUND MUST BE 70% MINIMUM AND HAVE A NON-GLARE FINISH. CBC SECTION 11B-703.5.1
4. PROPORTIONS: RAISED CHARACTERS ON SIGNS SHALL BE SELECTED FROM FONTS WHERE THE WIDTH OF THE UPPERCASE LETTER "O" IS 60% MINIMUM AND 110% MAXIMUM OF THE HEIGHT OF THE UPPERCASE LETTER "I". STROKE THICKNESS OF THE UPPERCASE LETTER "I" SHALL BE 15% MAXIMUM OF THE HEIGHT OF THE CHARACTER. CBC SECTION 11B-703.2
5. BRAILLE: CONTRACTED (GRADE 2) BRAILLE SHALL BE USED WHEREVER BRAILLE IS REQUIRED IN OTHER PORTIONS OF THESE STANDARDS. DOTS SHALL BE 1/10" ON CENTERS IN EACH CELL WITH 2/10" SPACE BETWEEN CELLS, MEASURED FROM THE SECOND COLUMN OF DOTS IN THE FIRST CELL TO THE FIRST COLUMN OF DOTS IN THE SECOND CELL. DOTS SHALL BE RAISED A MINIMUM OF 1/40" ABOVE THE BACKGROUND. BRAILLE DOTS SHALL BE DOMED OR ROUNDED. CBC SECTION 11B-703.3.1

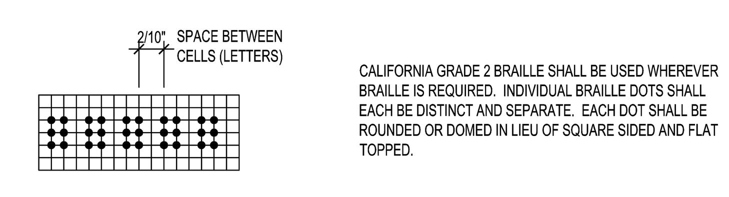

CALIFORNIA GRADE 2 BRAILLE SHALL BE USED WHEREVER BRAILLE IS REQUIRED. INDIVIDUAL BRAILLE DOTS SHALL EACH BE DISTINCT AND SEPARATE. EACH DOT SHALL BE ROUNDED OR DOMED IN LIEU OF SQUARE SIDED AND FLAT TOPPED.

6. MOUNTING HEIGHT AND LOCATION: SIGNS WITH RAISED CHARACTERS AND BRAILLE SHALL BE LOCATED 48" MINIMUM TO THE BASELINE OF THE LOWEST LINE OF BRAILLE AND 60" MAXIMUM TO THE BASELINE OF THE HIGHEST LINE OF RAISED CHARACTERS ABOVE THE FINISH FLOOR OR GROUND SURFACE. MOUNTING LOCATION SHALL BE DETERMINED SO THAT A PERSON MAY APPROACH WITHIN 3" OF SIGNAGE WITHOUT ENCOUNTERING PROTRUDING OBJECTS OR STANDING WITHIN THE SWING OF A DOOR. CBC SECTION 11B-703.4

SIGNAGE GENERAL NOTES — 20
SCALE: NONE

IDENTIFICATION STAMP
DIV. OF THE STATE ARCHITECT
APP. 03-119458 INC:
REVIEWED FOR
SS ☑ FLS ☑ ACS ☑
DATE:05/23/2019

DIVISION OF STATE ARCHITECT
355 South Grand Avenue, Suite 2100
Los Angeles, California. 90012
ph: (213) 897-3995 Fax: (213) 897-3159
agency

tBP architecture planning interiors

LICENSED ARCHITECT GARY PAIGE MOON NO. C25409 REN. 7-31-19 STATE OF CALIFORNIA

tBP/Architecture
4611 Teller Avenue
Newport Beach, CA 92660
ph: 949.673.0300 fx: 949.732.3895
architect

consultant

COMPTON COLLEGE
INSTRUCTIONAL BUILDING No. 2

COMPTON COMMUNITY COLLEGE DISTRICT
1111 E. ARTESIA BLVD. COMPTON, CA.

owner

tBP project number : 20998.00
file name:
drawn by: checked by:
date: 04/08/2019
Rev: date: description:

THIS DRAWING AND THE DESIGNS, DEPICTIONS, IDEAS AND OTHER INFORMATION CONTAINED HEREIN CONSTITUTE UNPUBLISHED WORK OF tBP/ARCHITECTURE AND SHALL REMAIN THE PROPERTY OF tBP/ARCHITECTURE IN PERPETUITY. NO PART THEREOF SHALL BE REPRODUCED, DISCLOSED, DISTRIBUTED, SOLD, PUBLISHED OR OTHERWISE USED IN ANY WAY WITHOUT THE ADVANCED EXPRESS WRITTEN CONSENT OF tBP/ARCHITECTURE.

drawing title:
SIGNAGE DETAILS

drawing no.:
11.01
drawing of

NOTES:

1. ALL INFORMATION PER 2016 CALIFORNIA BUILDING CODE AND ADA STANDARDS.
2. THE AUTOMATIC OPENING DEVICE IS ACTIVATED IF AN OBJECT PASSES THRU EITHER LINE A OR LINE B. LINE A OR B REPRESENT THE VERTICAL LOCATION OF THE DOOR REOPENING DEVICE THAT DOES NOT REQUIRE CONTACT.

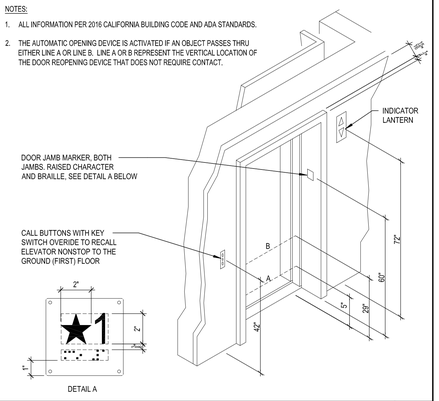

ELEVATOR CENTER ENTRANCE

SCALE: 3" = 1'-0" | 1

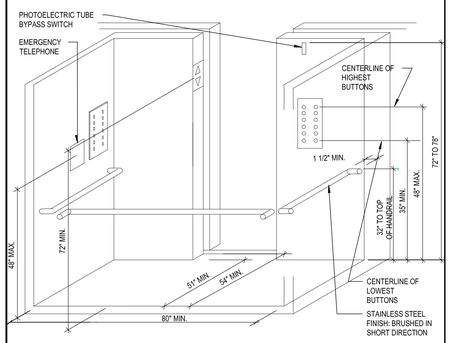

NOTE:
SEE ENLARGED ELEVATOR PLANS FOR ADDITIONAL INFORMATION ON SHEET A8.03.

ELEVATOR CAB AXONOMETRIC

SCALE: 3" = 1'-0" | 6

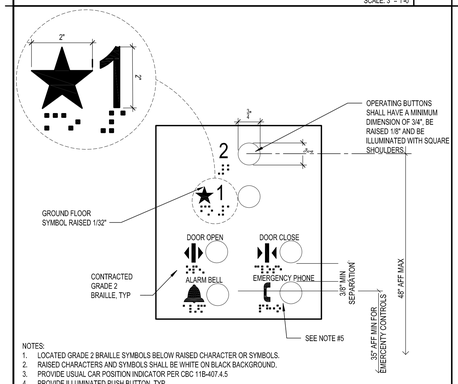

NOTES:

1. LOCATED GRADE 2 BRAILLE SYMBOLS BELOW RAISED CHARACTER OR SYMBOLS.
2. RAISED CHARACTERS AND SYMBOLS SHALL BE WHITE ON BLACK BACKGROUND.
3. PROVIDE USUAL CAR POSITION INDICATOR PER CBC 11B-407.4.5
4. PROVIDE ILLUMINATED PUSH BUTTON, TYP.
5. CHARACTERS AND "FISHTAIL" BRAILLE MARKING ARE COMPLIANT WITH THE AMERICANS WITH DISABILITIES ACT AND CALIFORNIA BUILDING CODE 2016.

ACCESSIBLE ELEVATOR CONTROLS

SCALE: HALF | 11

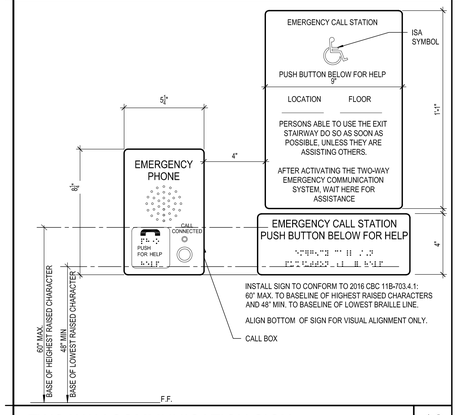

TWO WAY COMMUNICATION SIGN

SCALE: 3" = 1'-0" | 16

IDENTIFICATION STAMP
DIV. OF THE STATE ARCHITECT
APP. 03-119458 INC:
REVIEWED FOR
SS ☑ FLS ☑ ACS ☑
DATE:05/23/2019

DIVISION OF STATE ARCHITECT
355 South Grand Avenue, Suite 2100
Los Angeles, California. 90012
ph: (213) 897-3995 Fax: (213) 897-3159
agency

tBP
architecture
planning
interiors

LICENSED ARCHITECT
JEROME PAIGE ABBOTT
No. C25439
REN. 1-31-21
STATE OF CALIFORNIA

tBP/Architecture
4611 Teller Avenue
Newport Beach, CA 92660
ph: 949.673.0300 fx: 949.732.3895
architect

consultant

COMPTON COLLEGE
INSTRUCTIONAL BUILDING No. 2

COMPTON COMMUNITY COLLEGE DISTRICT
1111 E. ARTESIA BLVD. COMPTON, CA.

owner

tBP project number : 20998.00
file name:
drawn by: checked by:
date: 04/08/2019

Rev:	date:	description:

THIS DRAWING AND THE DESIGNS, CONDITIONS, IDEAS AND OTHER INFORMATION CONTAINED HEREIN CONSTITUTE UNPUBLISHED WORK OF tBP/ARCHITECTURE AND SHALL REMAIN THE PROPERTY OF tBP/ARCHITECTURE IN PERPETUITY. ANY PART THEREOF SHALL BE REPRODUCED, DISCLOSED, DISTRIBUTED, SOLD, PUBLISHED OR OTHERWISE USED IN ANY WAY WITHOUT THE ADVANCED EXPRESS WRITTEN CONSENT OF tBP/ARCHITECTURE.

drawing title:
SIGNAGE DETAILS

drawing no.:
11.02
drawing of

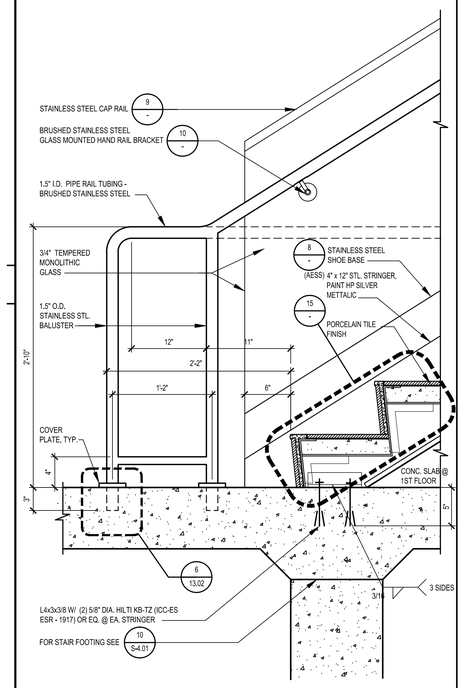

SECTION - STAIR #1 LANDING — SCALE: 1-1/2" = 1'-0" — 1

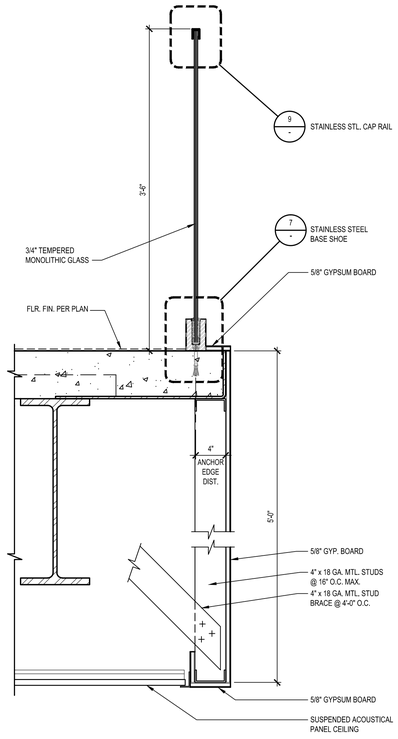

SECTION - STAIR #1 UPPER GUARDRAIL — SCALE: 1-1/2" = 1'-0" — 2

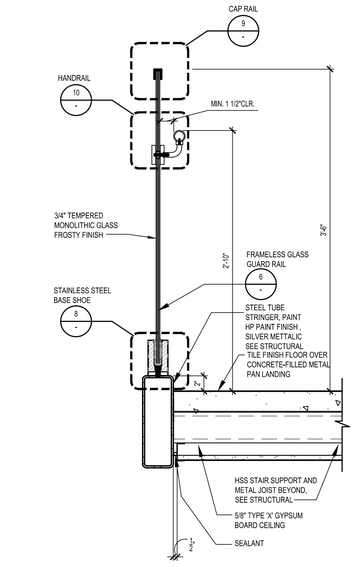

SECTION - STAIR #1 — SCALE: 1-1/2" = 1'-0" — 3

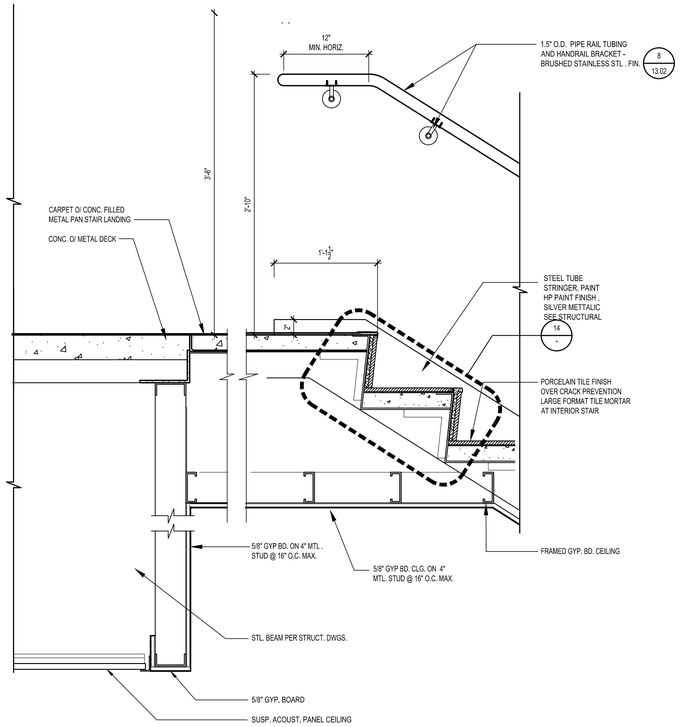

SECTION - STAIR #1 UPPER LANDING — SCALE: 1-1/2" = 1'-0" — 5

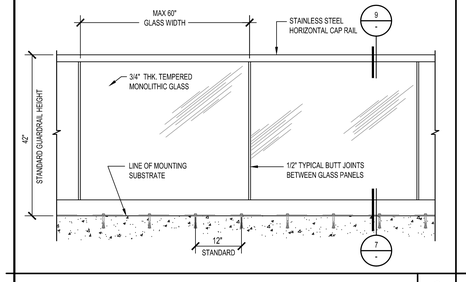

TYPICAL GLASS RAILING ELEVATION — SCALE: 3/4" = 1'-0" — 6

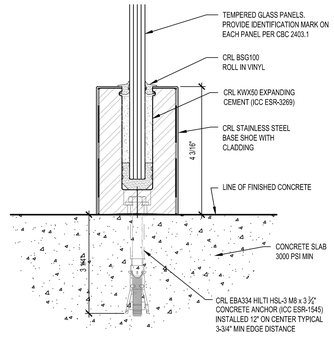

CONC. SUBSTRATE TYP. SURFACE MOUNT DET. — SCALE: HALF — 7

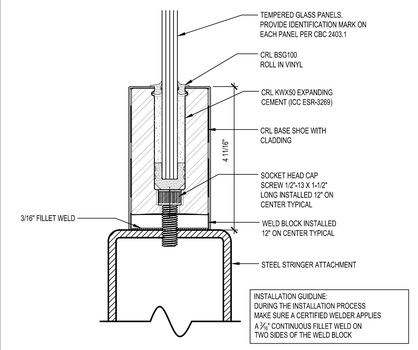

STL. TUBE SUBSTRATE TYP. SURF. MOUNT DET. — SCALE: HALF — 8

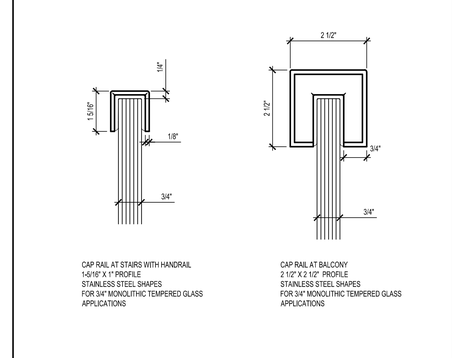

CAP RAIL — SCALE: HALF — 9

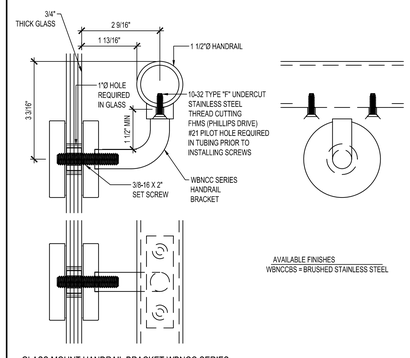

GLASS MOUNT HANDRAIL BRACKET — SCALE: HALF — 10

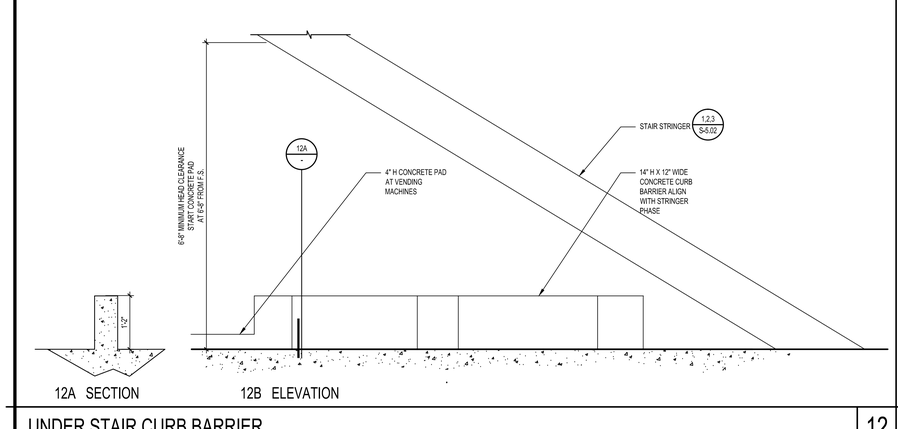

UNDER STAIR CURB BARRIER — SCALE: 3/4" = 1'-0" — 12

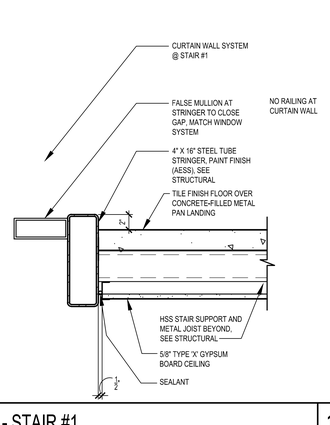

SECTION - STAIR #1 — SCALE: 1-1/2" = 1'-0" — 13

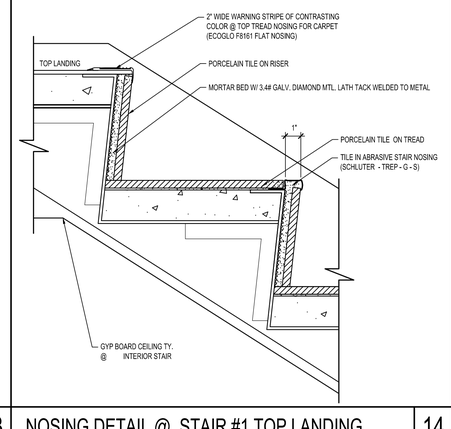

NOSING DETAIL @ STAIR #1 TOP LANDING — SCALE: 3" = 1'-0" — 14

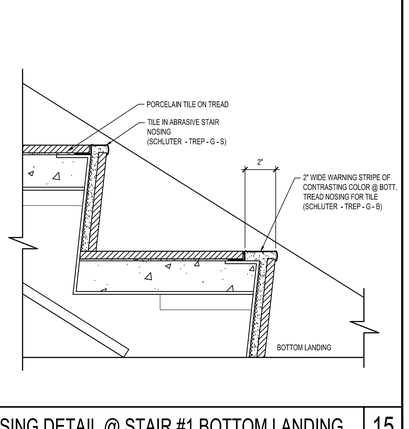

NOSING DETAIL @ STAIR #1 BOTTOM LANDING — SCALE: 3" = 1'-0" — 15

IDENTIFICATION STAMP
DIV. OF THE STATE ARCHITECT
APP. 03-119458 INC:
REVIEWED FOR
SS ☑ FLS ☑ ACS ☑
DATE:05/23/2019

DIVISION OF STATE ARCHITECT
355 South Grand Avenue, Suite 2100
Los Angeles, California. 90012
ph: (213) 897-3995 Fax: (213) 897-3159
agency

tBP
architecture
planning
interiors

LICENSED ARCHITECT
CRAIG PAIGE ADAMS
No. C25409
RENEWAL 1-31-21
STATE OF CALIFORNIA

tBP/Architecture
4611 Teller Avenue
Newport Beach, CA 92660
ph: 949.673.0300 fx: 949.732.3895
architect

consultant

COMPTON COLLEGE
INSTRUCTIONAL BUILDING No. 2

COMPTON COMMUNITY COLLEGE DISTRICT
1111 E. ARTESIA BLVD. COMPTON, CA.

owner

tBP project number : 20998.00

file name:

drawn by: checked by:

date: 04/08/2019

Rev:	date:	description:

THE DRAWING AND THE DESIGNS, DEFINITIONS, IDEAS AND OTHER INFORMATION CONTAINED HEREIN CONSTITUTE LIBRARIES OF WORK OF tBP/ARCHITECTURE AND SHALL REMAIN THE PROPERTY OF tBP/ARCHITECTURE IN PERPETUITY. NO PART OF WORK SHALL BE REPRODUCED, DISCLOSED, DISTRIBUTED, SOLD, PUBLISHED OR OTHERWISE USED IN ANY WAY WITHOUT THE ADVANCED EXPRESS WRITTEN CONSENT OF tBP/ARCHITECT, INC.

drawing title:
STAIR #1 DETAILS

drawing no.:
13.01
drawing of

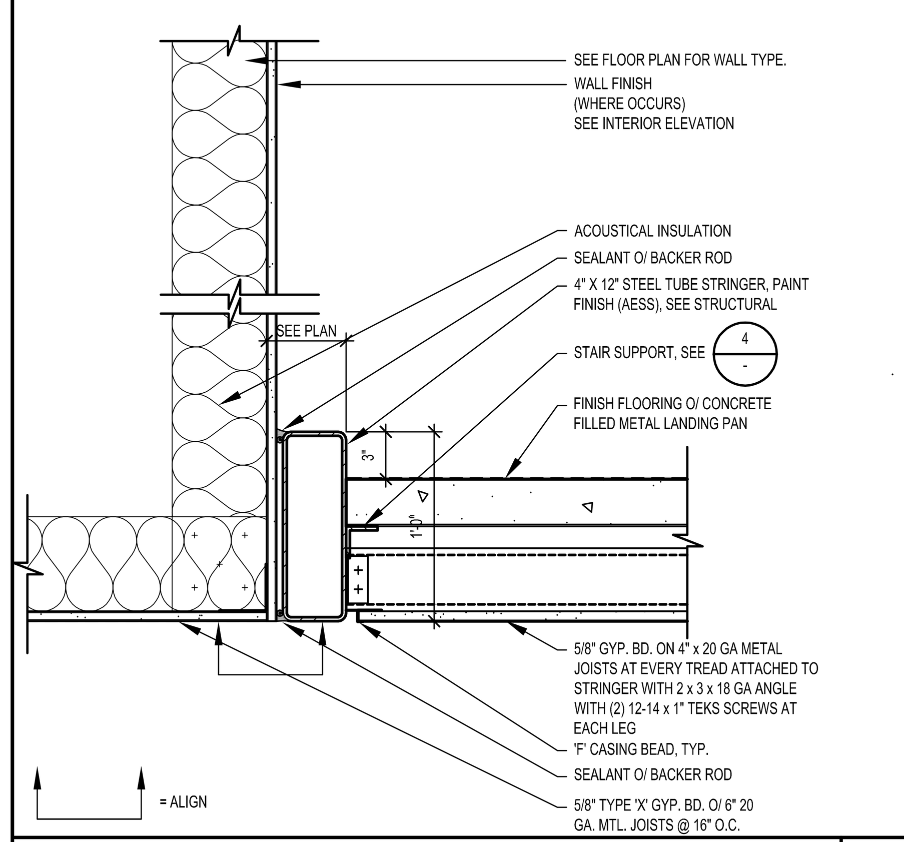

SOFFIT AT STAIR LANDING — 1
SCALE: 1-1/2" - 1'-0"

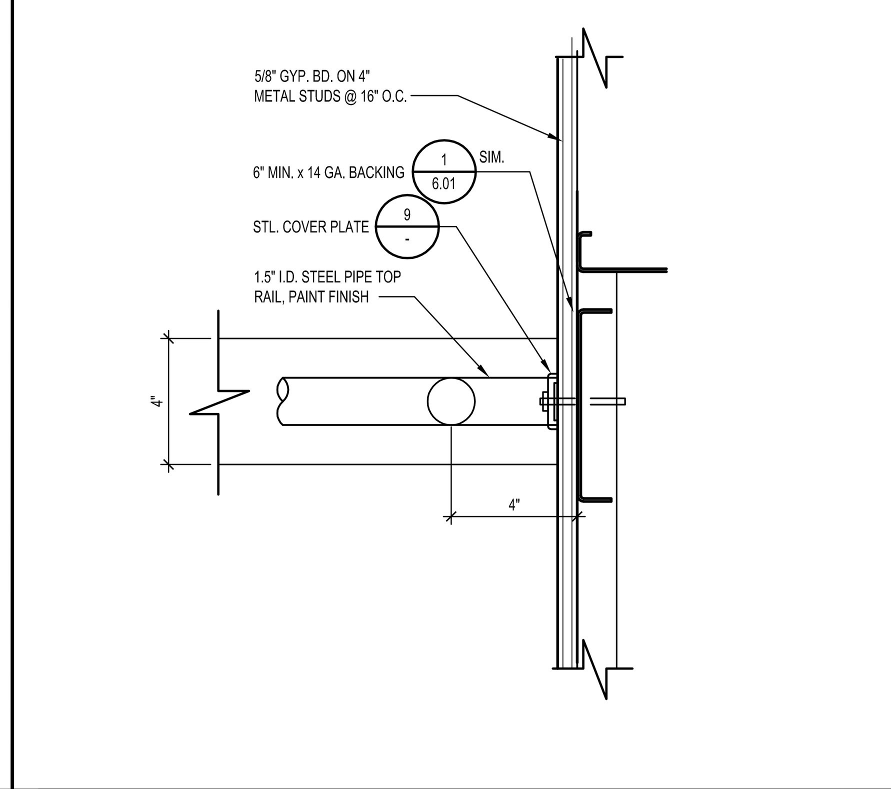

GUARDRAIL TERMINATION AT WALL — 2
SCALE: 3" = 1'-0"

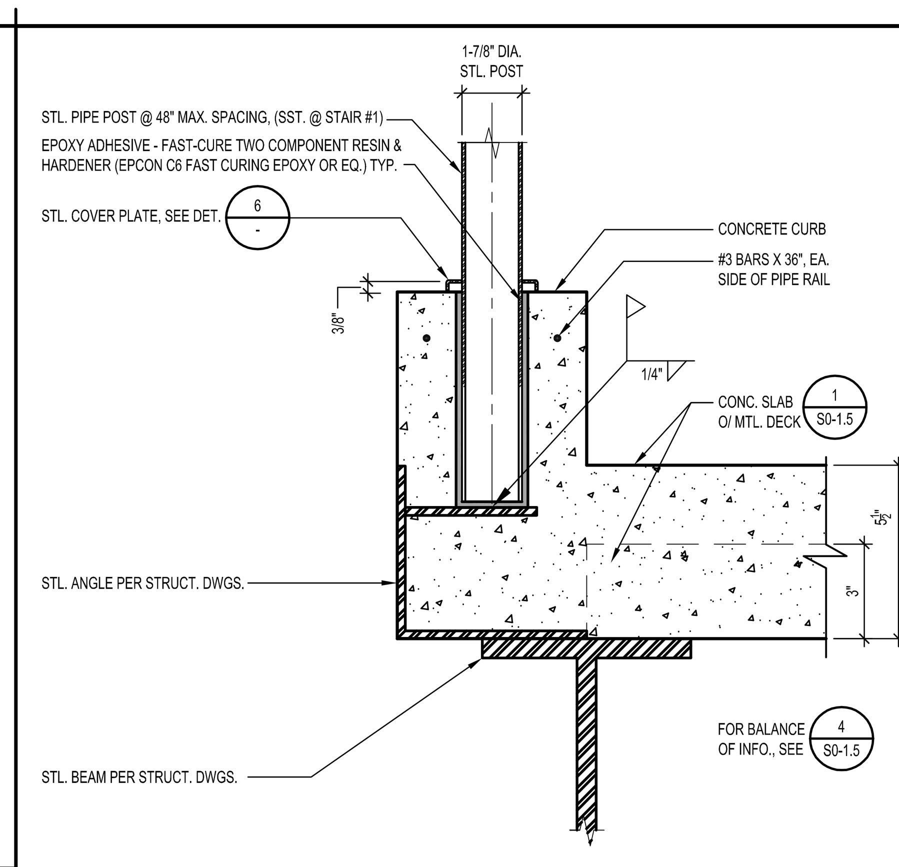

BALUSTER - ROUND POST @ CURB — 3
SCALE: HALF

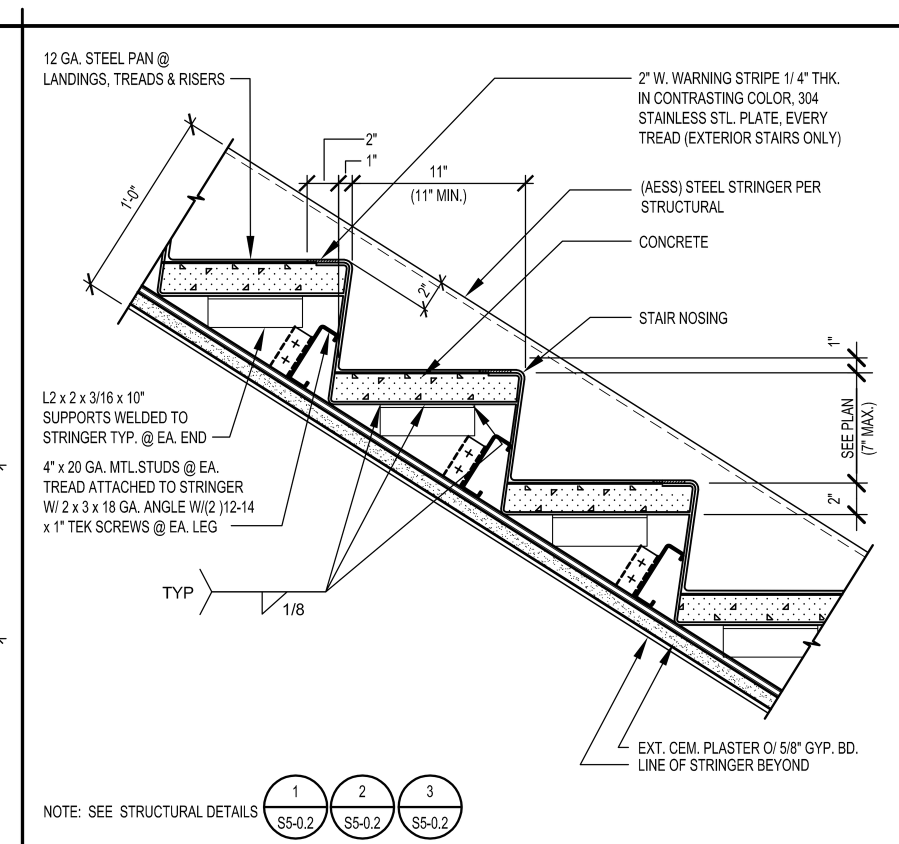

STAIR #2 & #3 TYPICAL TREAD AND RISER — 4
SCALE: 1-1/2" - 1'-0"

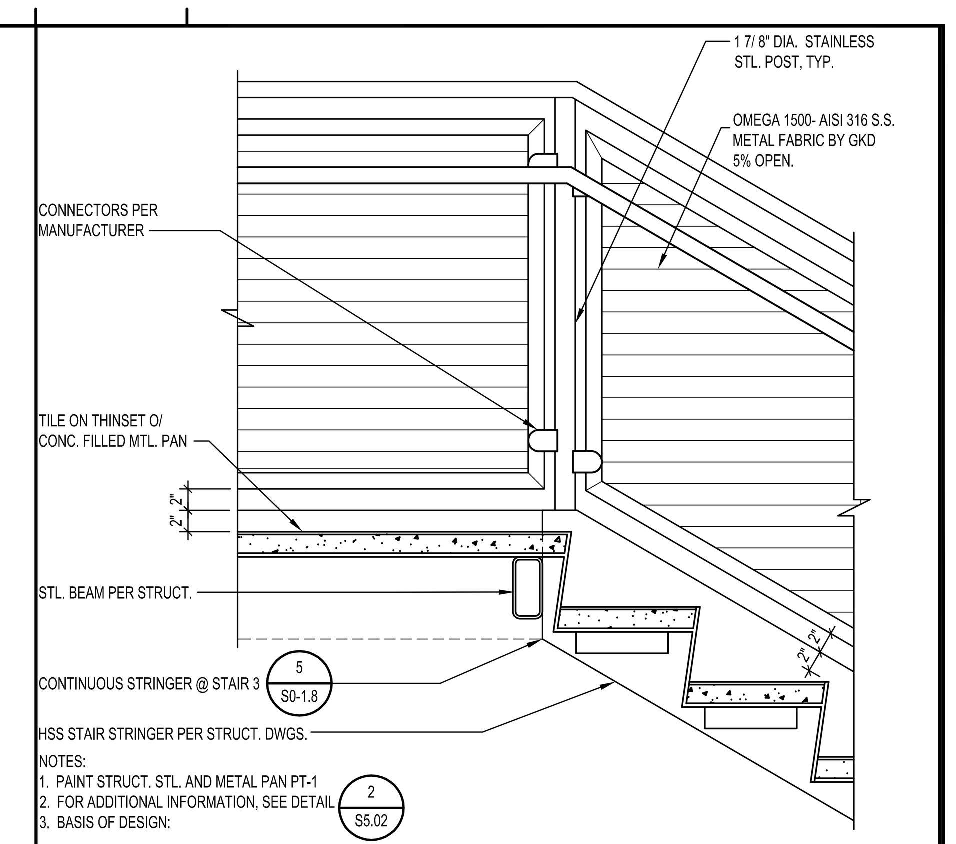

STAIR 2/3 SECTION DOWN - INTERMED. LANDING — 5
SCALE: 1" = 1'-0"

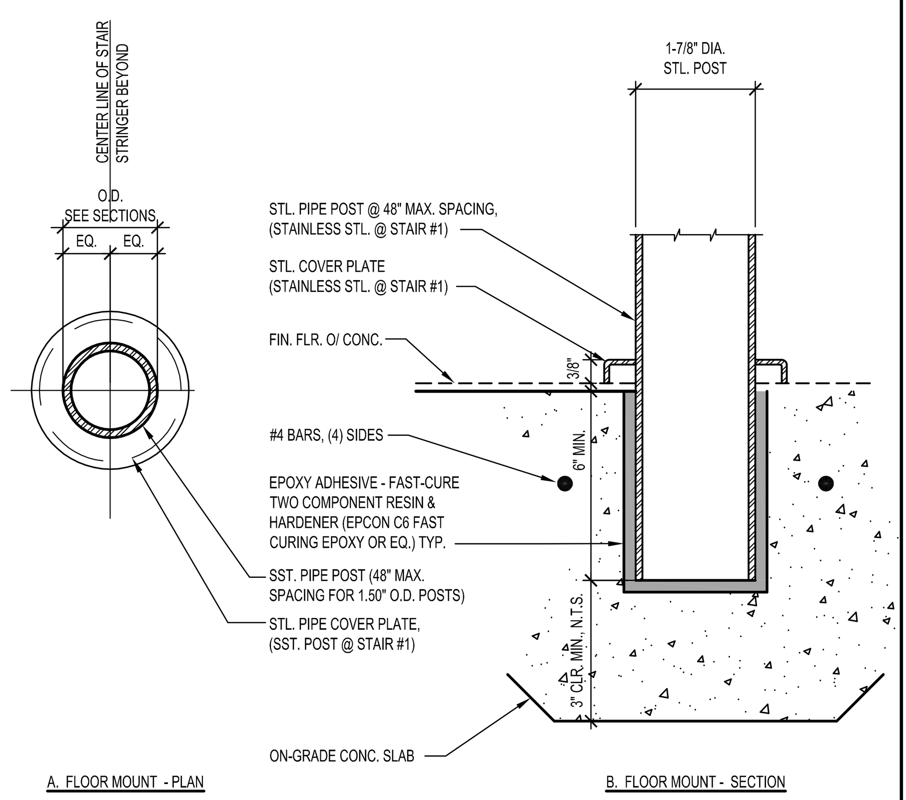

BALUSTER - ROUND POST — 6
SCALE: HALF

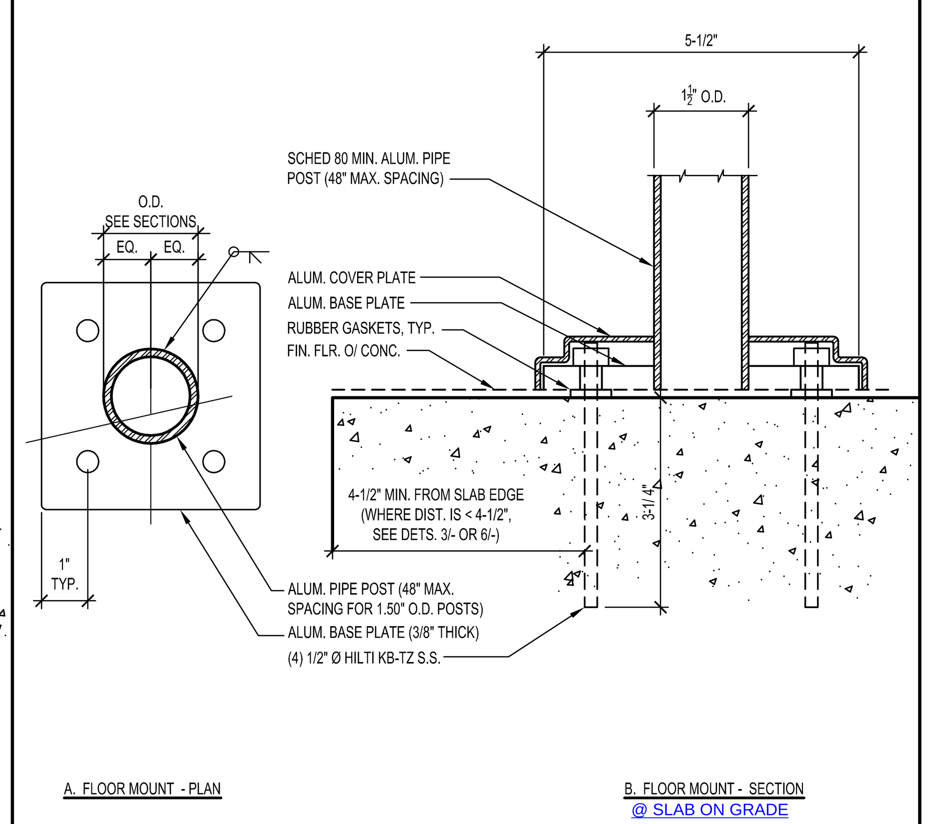

BALUSTER - ROUND POST — 7
SCALE: HALF

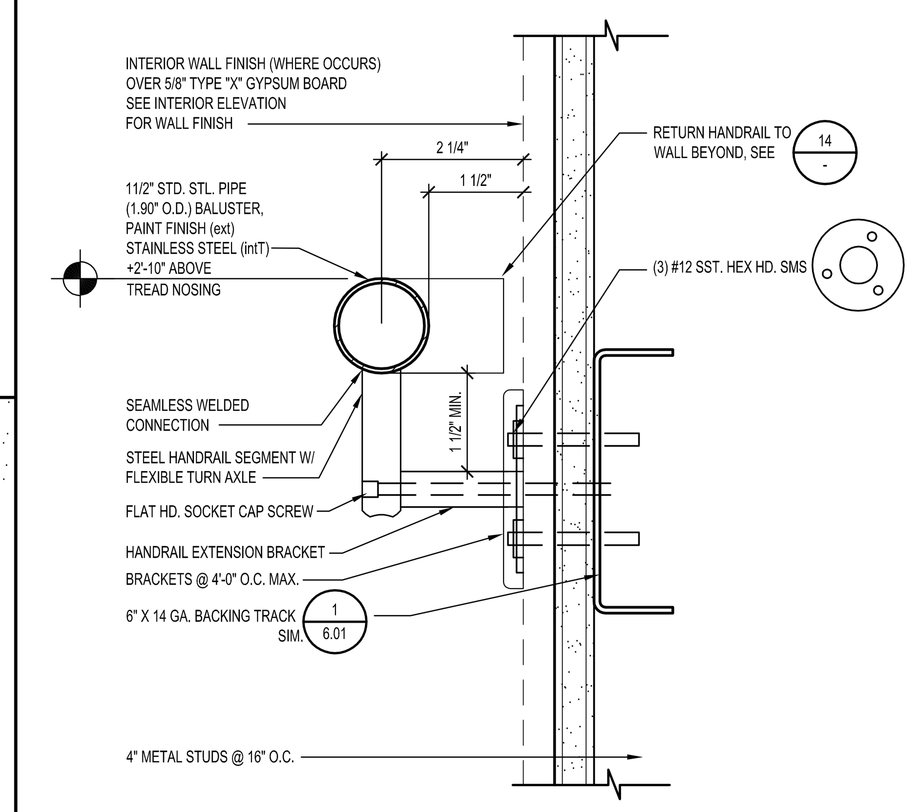

WALL MOUNTED HANDRAIL — 8
SCALE: HALF

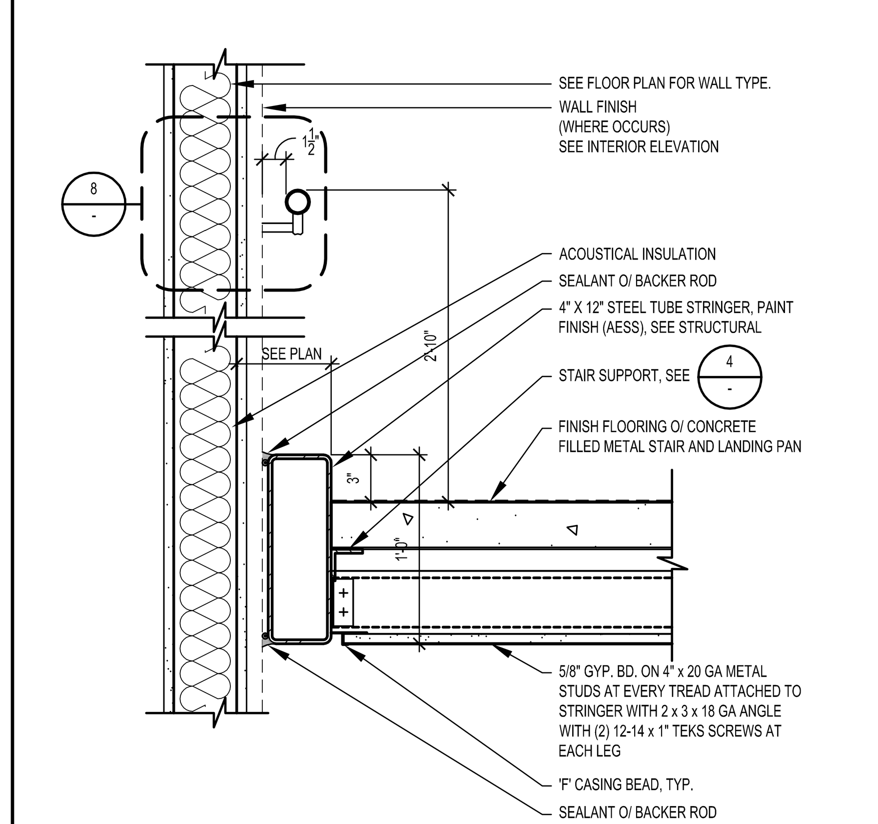

SECTION THROUGH WALL-MOUNTED HANDRAIL — 9
SCALE: 1-1/2" - 1'-0"

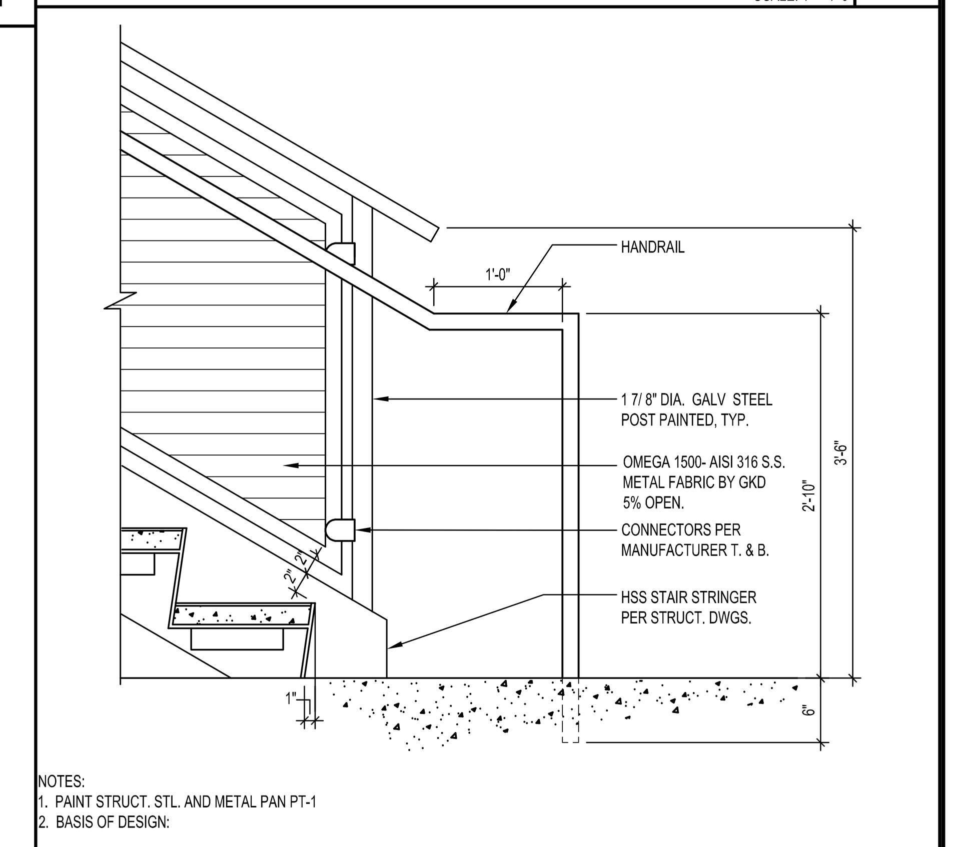

STAIR 2/3 SECTION UP - INTERMEDIATE LANDING — 10
SCALE: 1" = 1'-0"

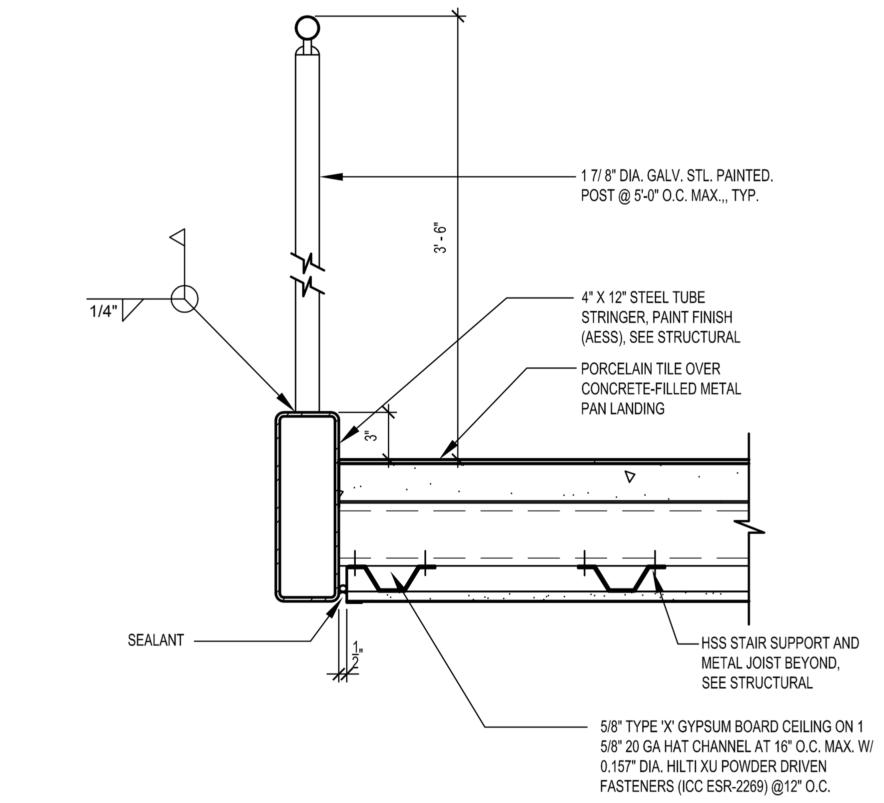

SECTION - STAIR #1 INTERMEDIATE LANDING — 11
SCALE: 1-1/2" - 1'-0"

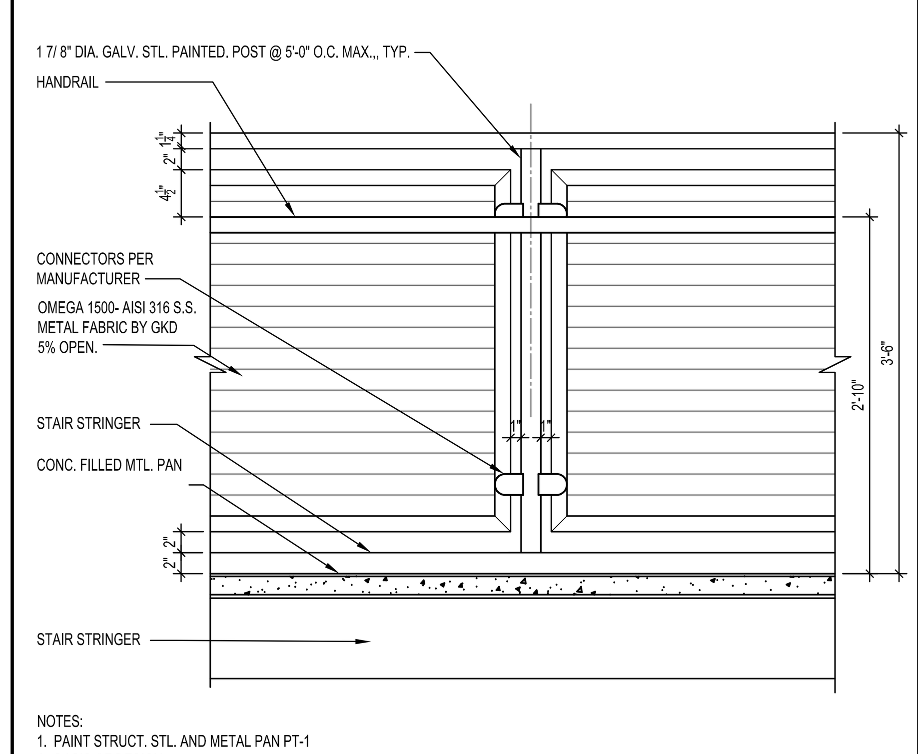

STAIR #2 / 3 TYP. GUARDRAIL ELEVATION — 12
SCALE: 1" = 1'-0"

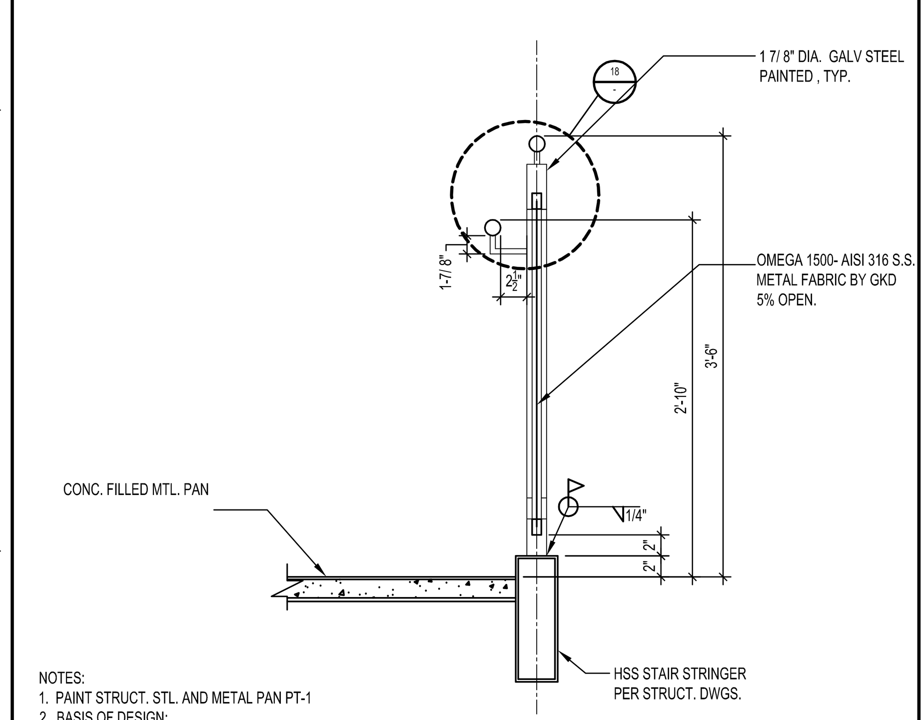

TYPICAL GUARDRAIL SECTION — 13
SCALE: 1" = 1'-0"

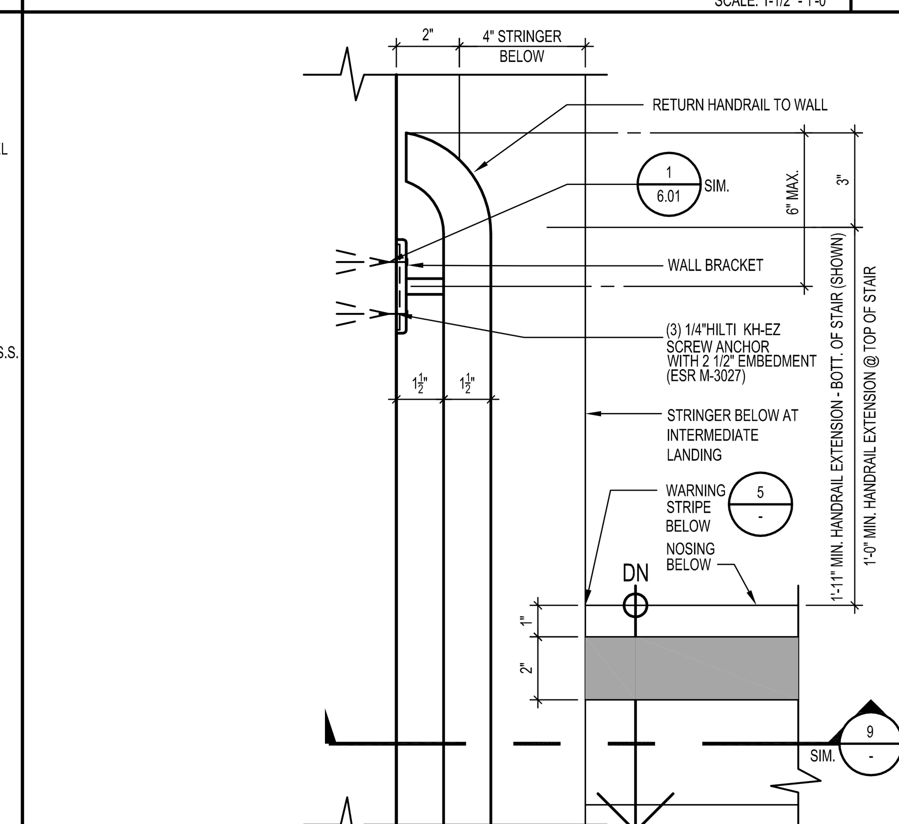

WALL-MOUNTED HANDRAIL EXTENSION/RETURN — 14
SCALE: 3" = 1'-0"

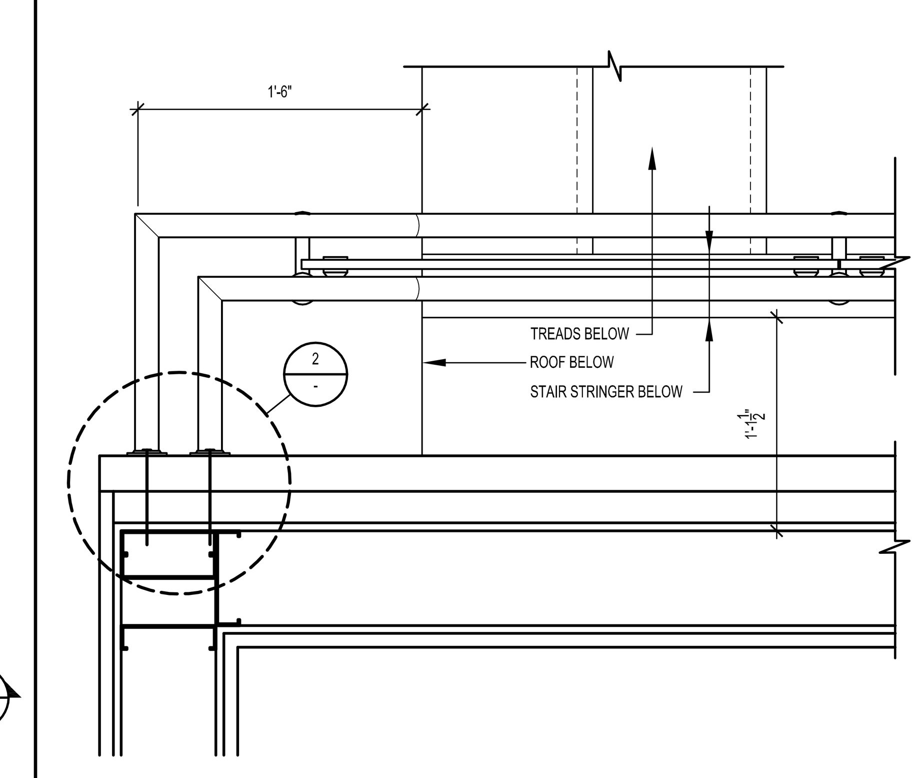

STAIR 2 RAIL @ ROOF LEVEL — 15
SCALE: 1-1/2" - 1'-0"

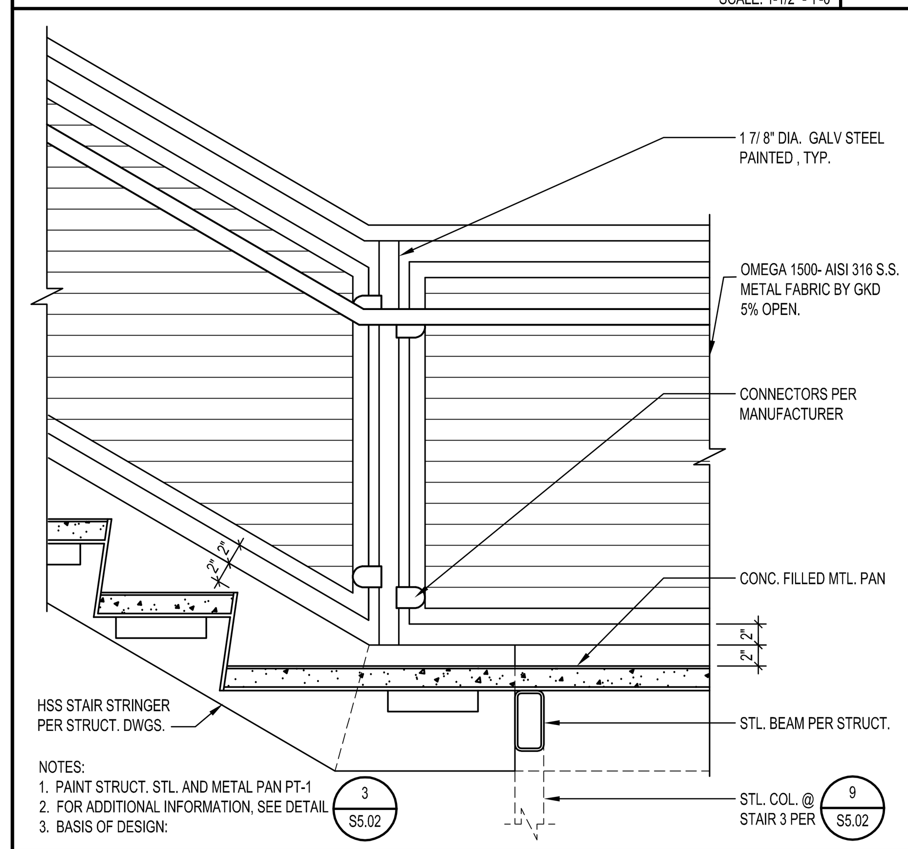

STAIR 2/3 SECTION UP - INTERMEDIATE LANDING — 16
SCALE: 1" = 1'-0"

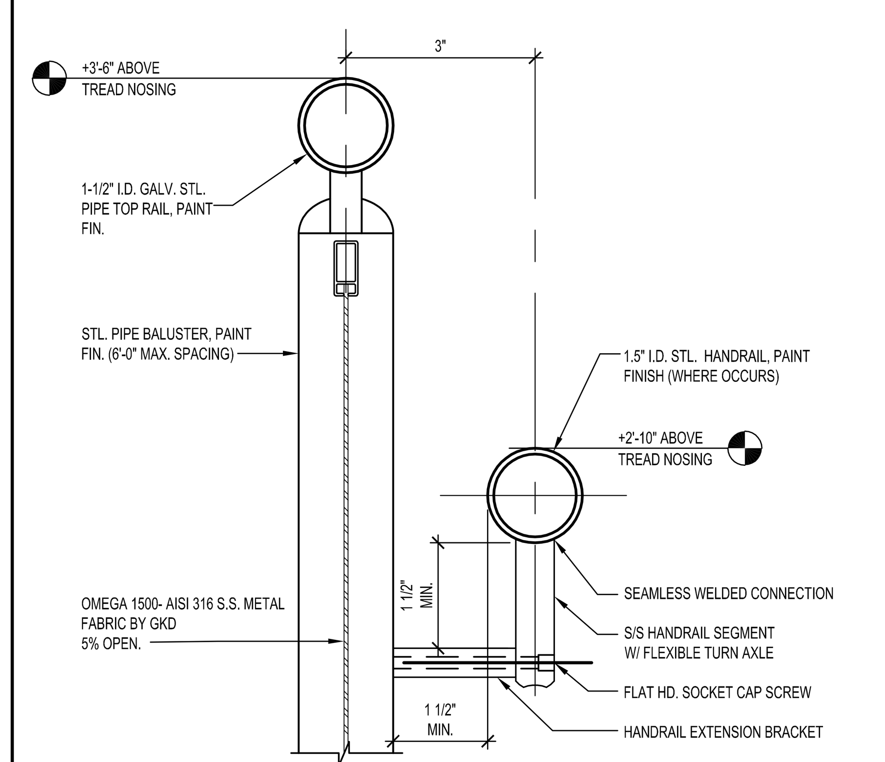

18A (CONDITION WITH NO HANDRAIL)

STAIR #2&3 EXTERIOR RAIL - SECTION — 18
SCALE: 3" = 1'-0"

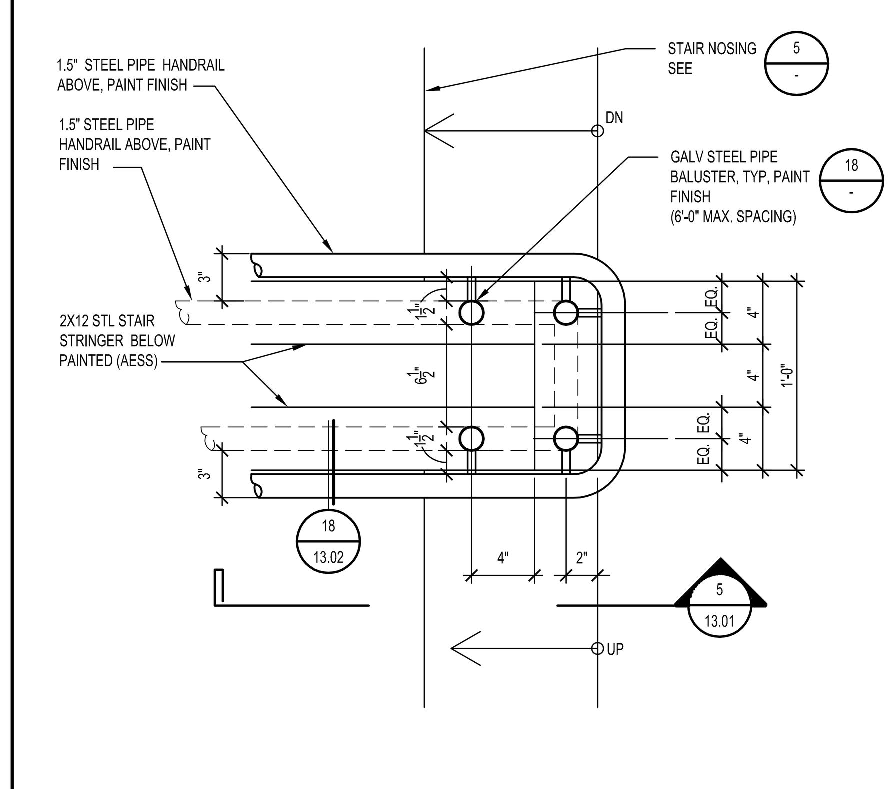

STAIR #2&3 GUARDRAIL PLAN AT LANDING — 19
SCALE: 1-1/2" - 1'-0"

IDENTIFICATION STAMP
DIV. OF THE STATE ARCHITECT
APP. 03-119458 INC:
REVIEWED FOR
SS ☑ FLS ☑ ACS ☑
DATE:05/23/2019

DIVISION OF STATE ARCHITECT
355 South Grand Avenue, Suite 2100
Los Angeles, California. 90012
ph: (213) 897-3995 Fax: (213) 897-3159
agency

tBP
architecture planning interiors

LICENSED ARCHITECT GARY PAIGE MOON NO. C25409 REN. 7-31-19 STATE OF CALIFORNIA

tBP/Architecture
4611 Teller Avenue
Newport Beach, CA 92660
ph: 949.673.0300 fx: 949.732.3895
architect

consultant

COMPTON COLLEGE
INSTRUCTIONAL BUILDING No. 2

COMPTON COMMUNITY COLLEGE DISTRICT
1111 E. ARTESIA BLVD. COMPTON, CA.

owner

tBP project number : 20998.00
file name:
drawn by: checked by:
date: 04/08/2019
Rev: date: description:

THIS DRAWING AND THE DESIGNS, DEPICTIONS, IDEAS AND OTHER INFORMATION CONTAINED HEREIN CONSTITUTE UNPUBLISHED WORK OF tBP/ARCHITECTURE AND SHALL REMAIN THE PROPERTY OF tBP/ARCHITECTURE IN PERPETUITY. NO PART THEREOF SHALL BE REPRODUCED, DISCLOSED, DISTRIBUTED, SOLD, PUBLISHED OR OTHERWISE USED IN ANY WAY WITHOUT THE ADVANCED EXPRESS WRITTEN CONSENT OF tBP/ARCHITECTURE.

drawing title:
STAIR DETAILS

drawing no.:
13.02
drawing of

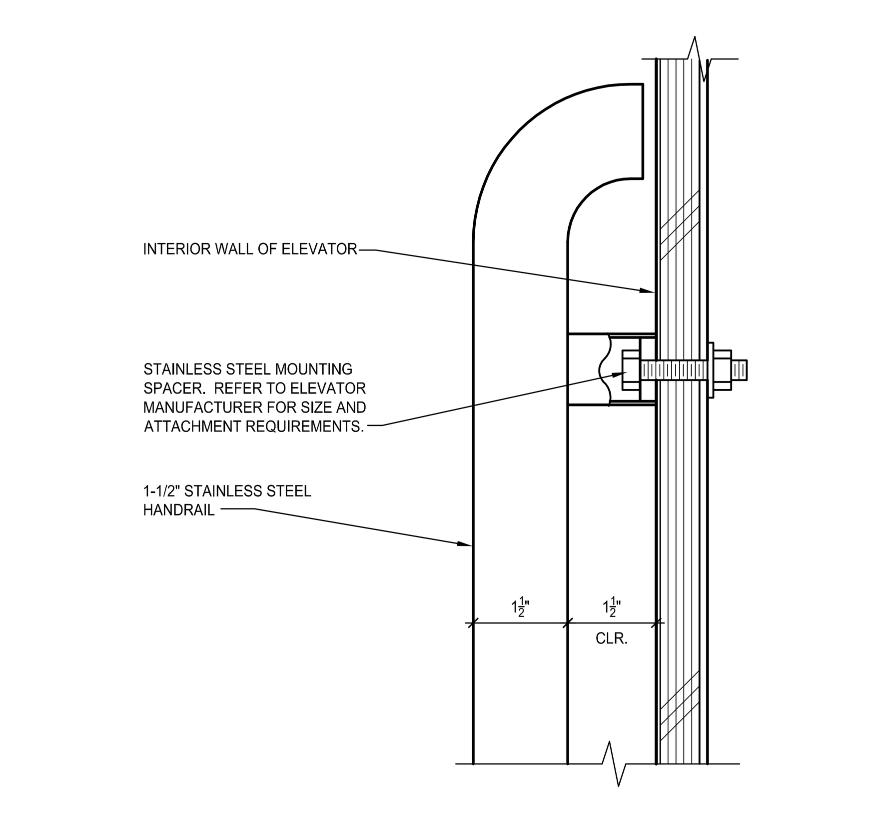

ELEVATOR HANDRAIL DETAIL — 1
SCALE: HALF

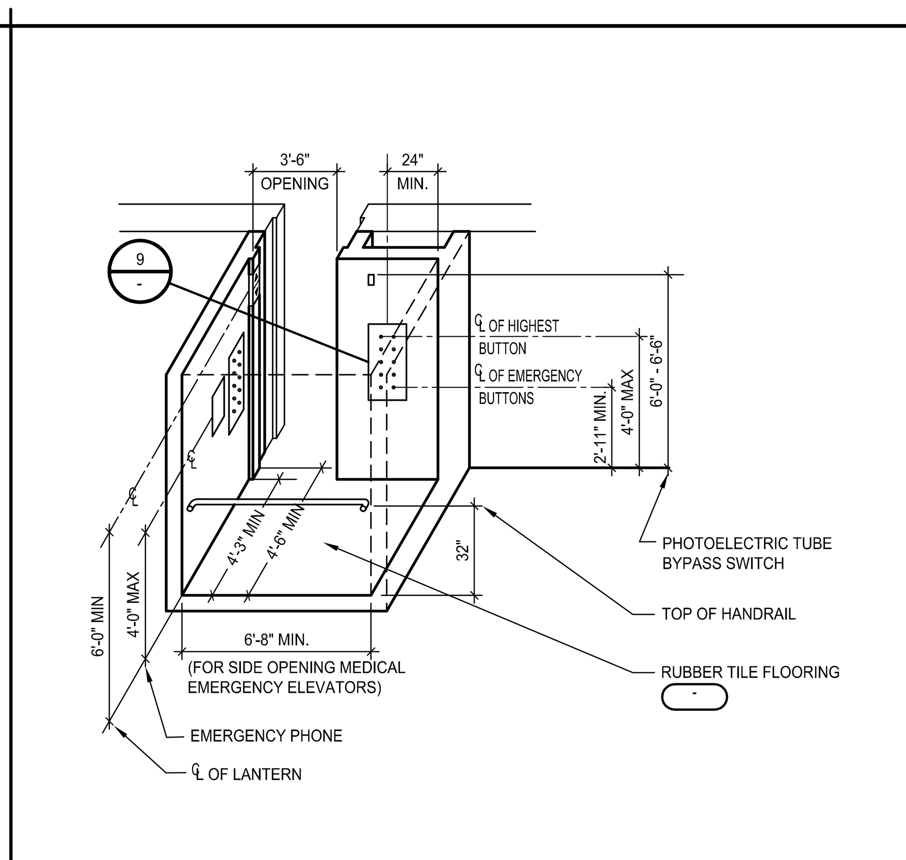

ELEVATOR CAB CLEARANCES — 2
SCALE: 1/4" = 1'-0"

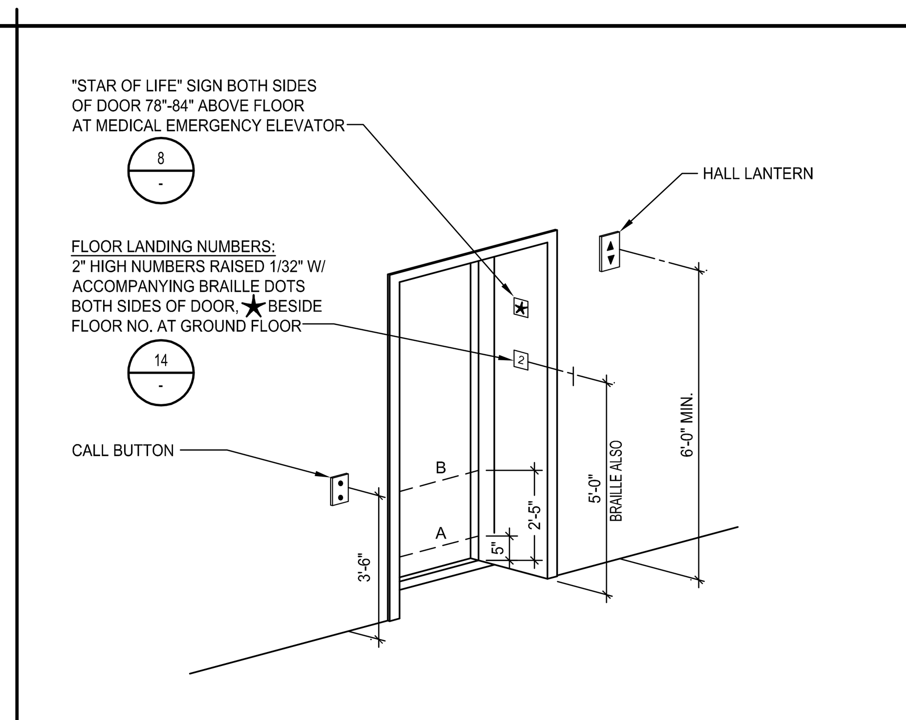

NOTE:
LINE A AND LINE B REPRESENT THE VERTICAL LOCATION OF THE DOOR REOPENING DEVICE BEAM DETECTORS.

ELEVATOR CONTROLS AND SIGNAGE — 3
SCALE: 1/4" = 1'-0"

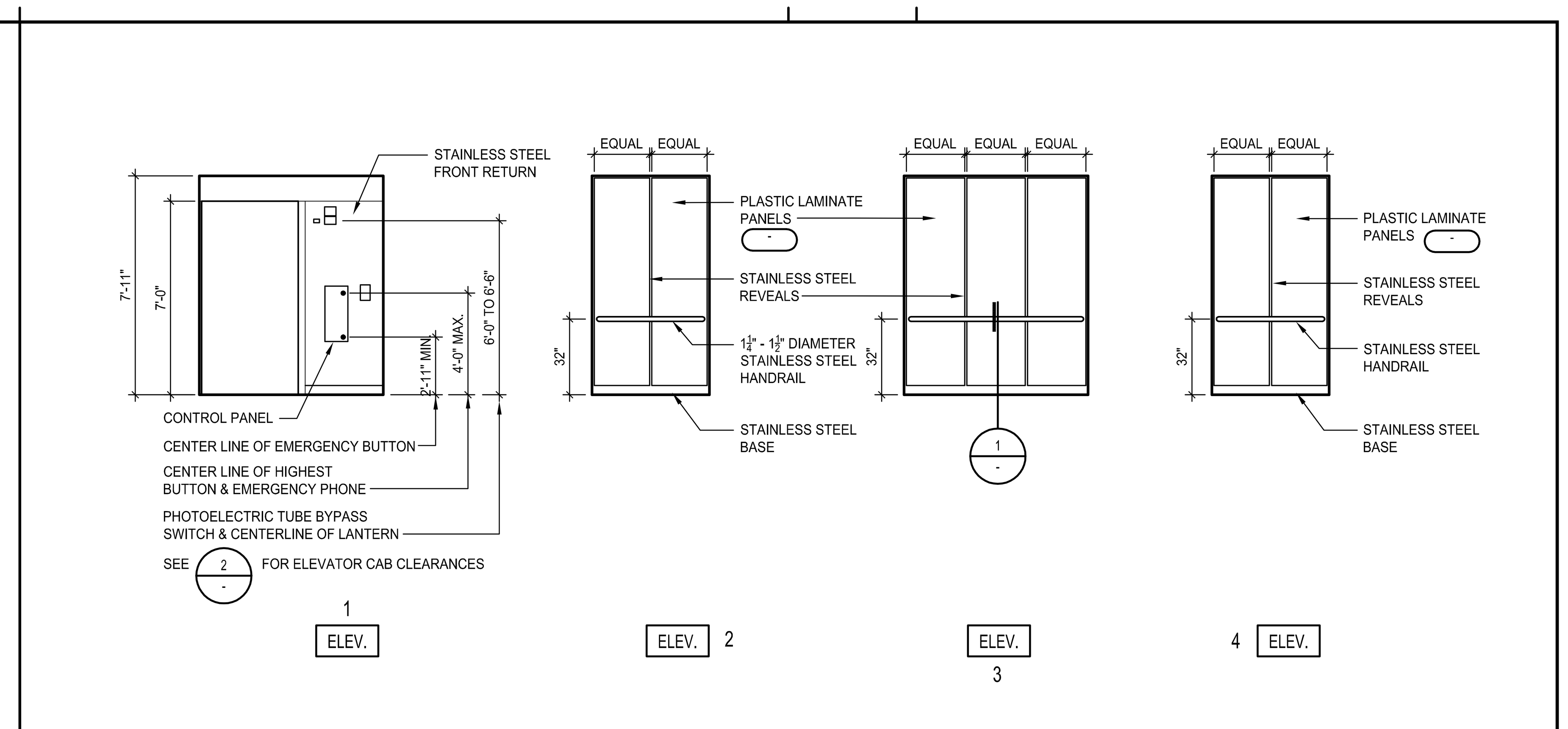

ELEVATOR CAB ELEVATIONS — 5
SCALE: 1/4" = 1'-0"

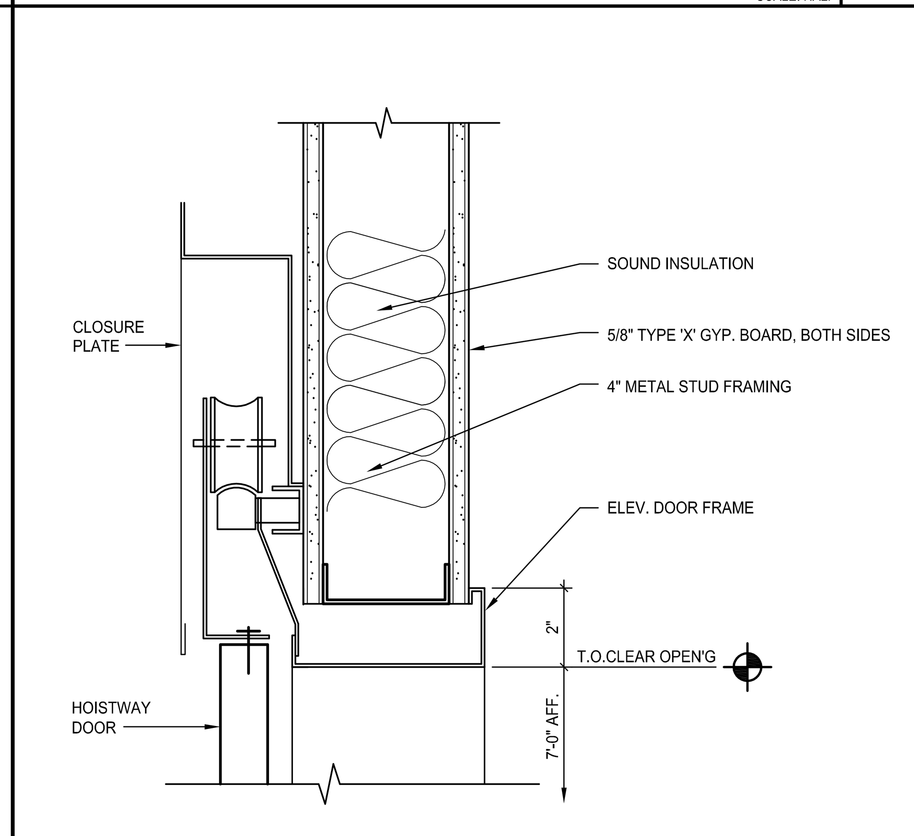

ELEVATOR DOOR HEAD — 6
SCALE: 3" = 1'-0"

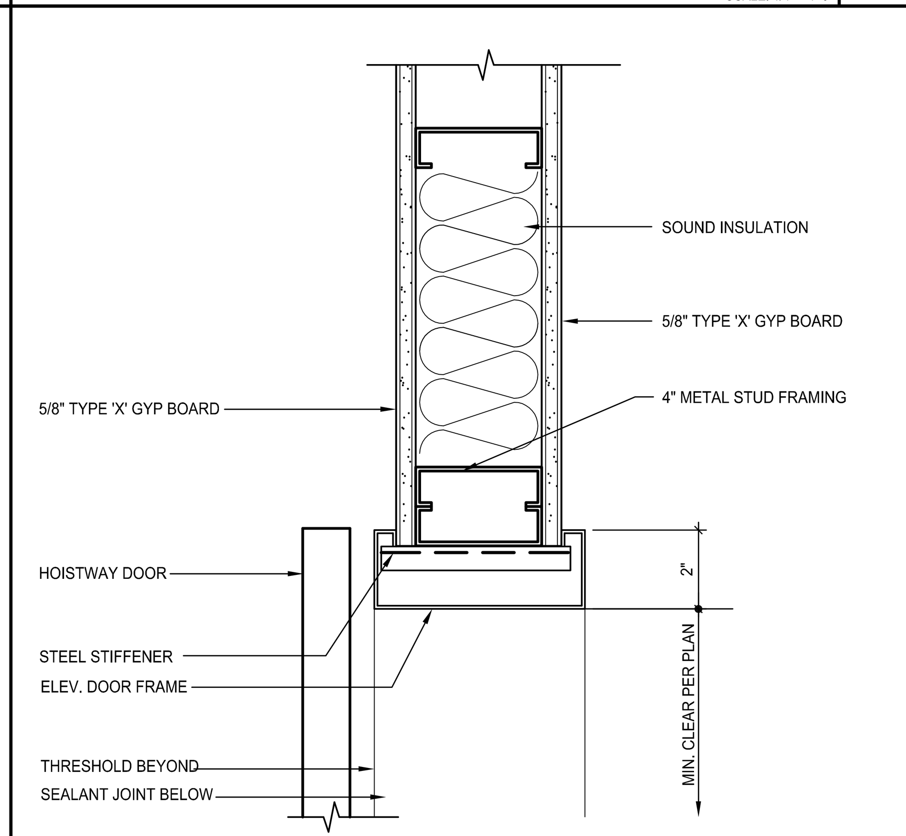

ELEVATOR DOOR JAMB — 7
SCALE: 3" = 1'-0"

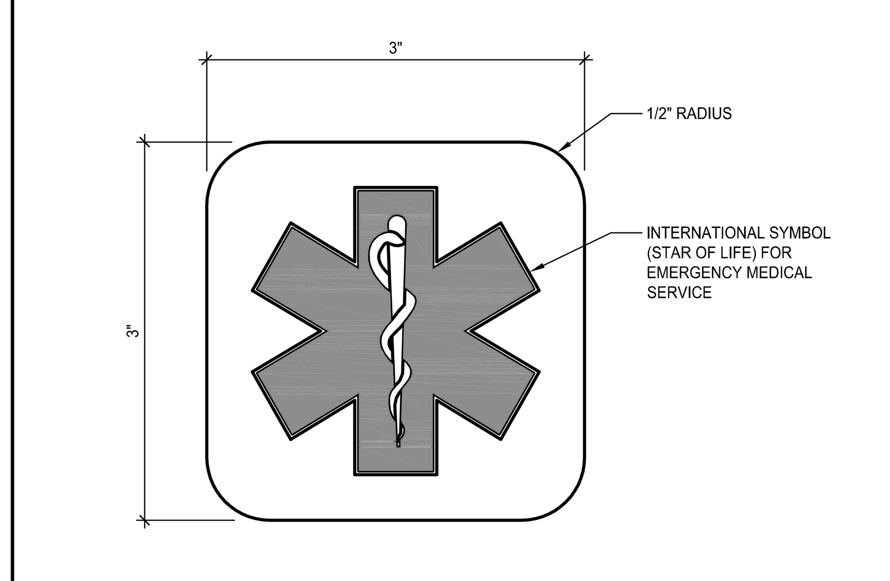

NOTE:
SYMBOL SHALL BE PERMENTLY ATTACHED TO EACH SIDE OF HOISTWAY DOOR FRAME ON THE PORTION OF THE FRAME AT RIGHT ANGLES TO THE LANDING AREA. EACH SYMBOL SHALL BE NOT LESS THAN 78" AND NOT MORE THAN 84" ABOVE THE FINISH FLOOR.

EMERGENCY MEDICAL ELEVATOR "STAR OF LIFE" — 8
SCALE: FULL

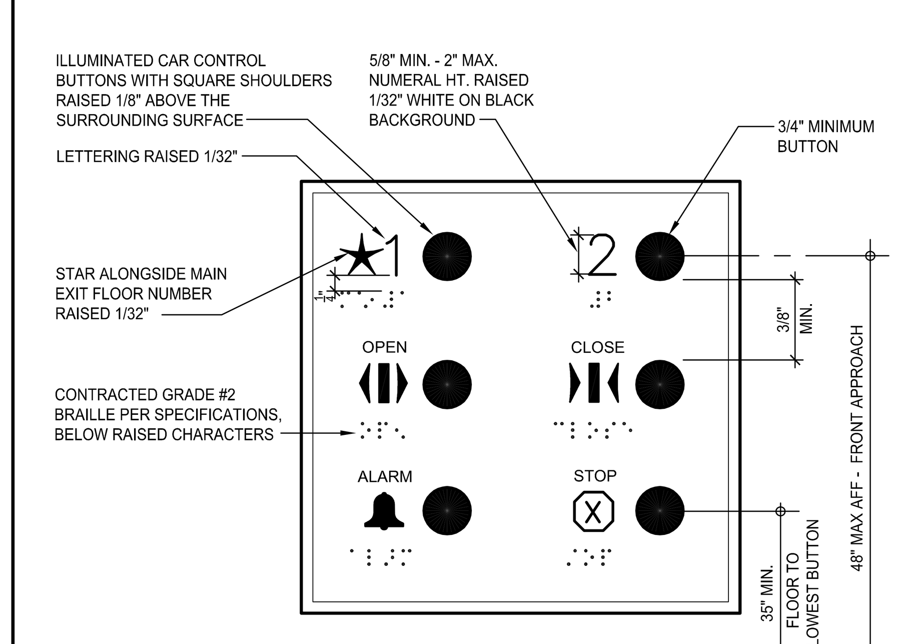

NOTE: VERIFY NUMBER OF STOPS & SECURITY SETTINGS FOR EACH ELEVATOR

ELEVATOR CONTROL PANEL — 9
SCALE: N.T.S.

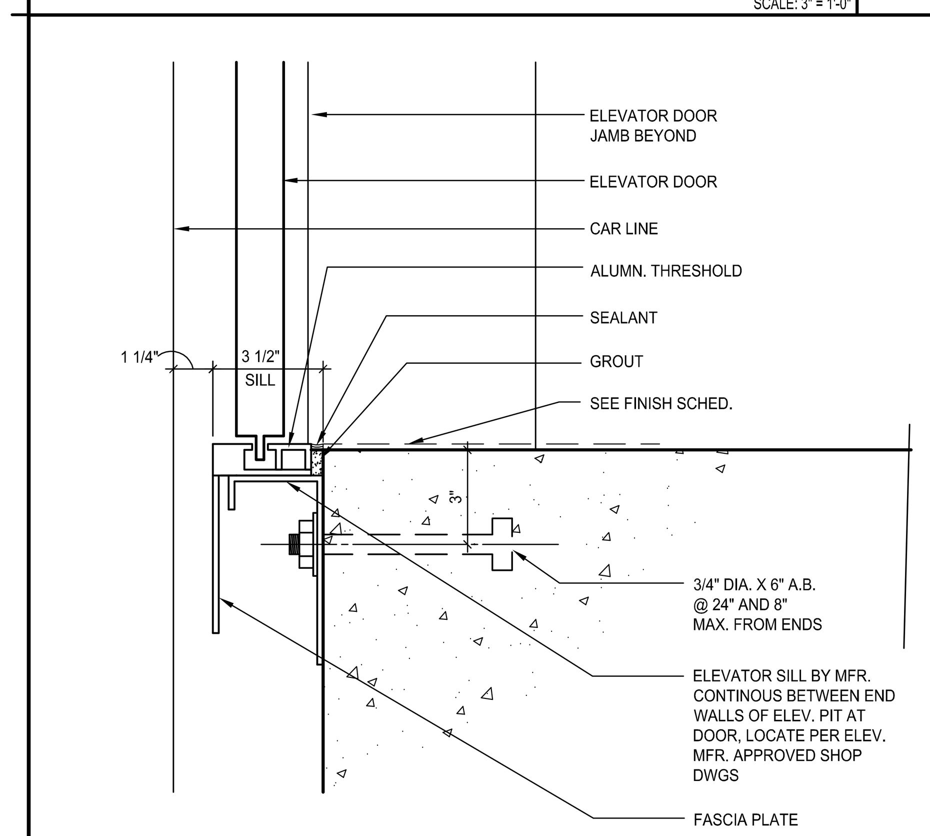

ELEVATOR THRESHOLD AT 1st. FLOOR — 11
SCALE: 3" = 1'-0"

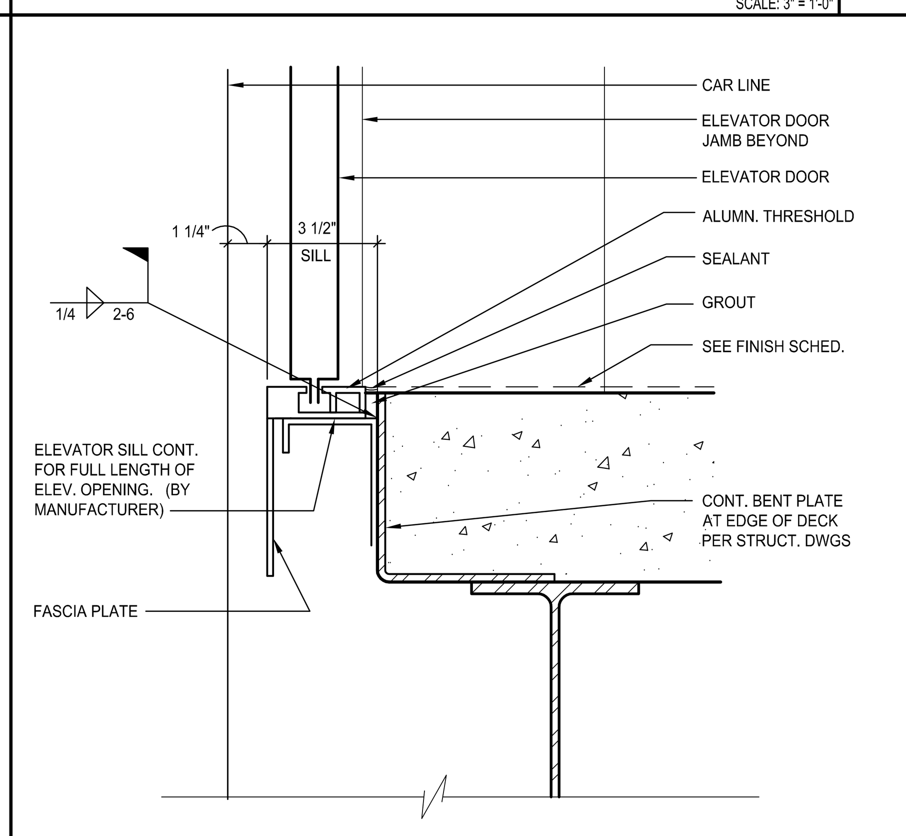

ELEVATOR THRESHOLD AT 2nd. FLOOR — 12
SCALE: 3" = 1'-0"

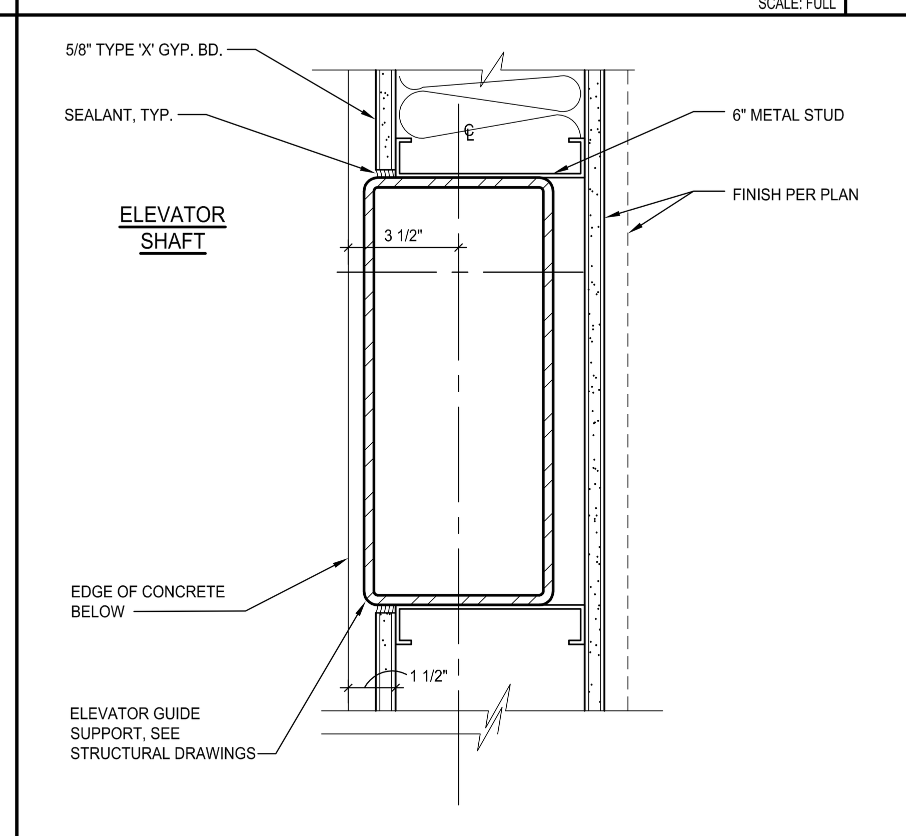

GUIDE RAIL SUPPORT — 13
SCALE: 3" = 1'-0"

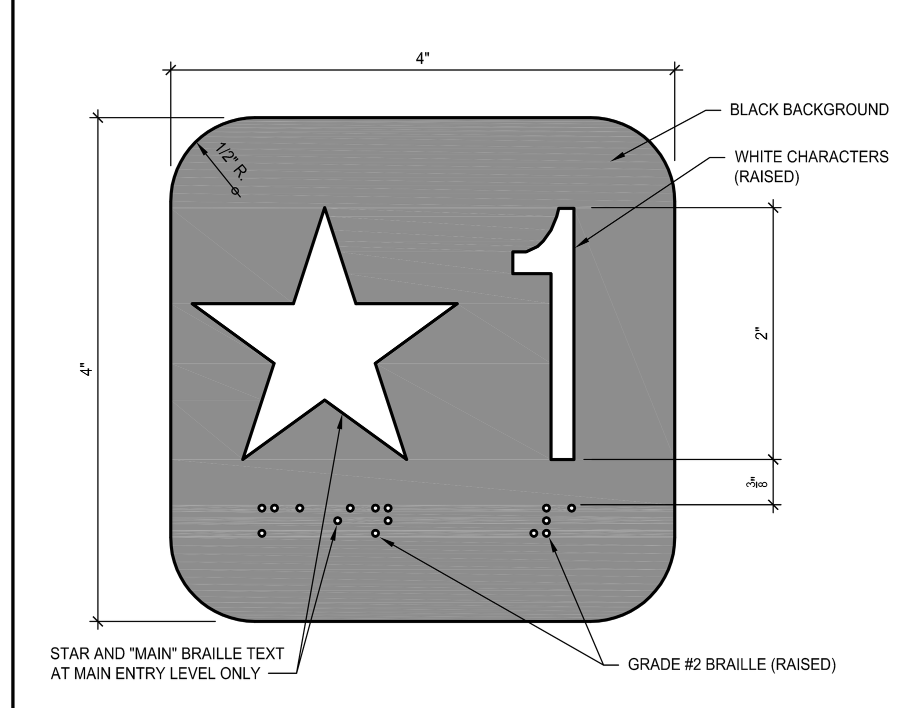

NOTES:
1. SIGN SHALL BE PERMANENTLY ATTACHED TO EACH SIDE OF HOISTWAY DOOR FRAME ON THE PORTION OF THE FRAME AT RIGHT ANGLES TO THE LANDING AREA.
2. SEE DETAIL 3 FOR MOUNTING HEIGHT.

ELEVATOR FLOOR SIGNAGE — 14
SCALE: FULL

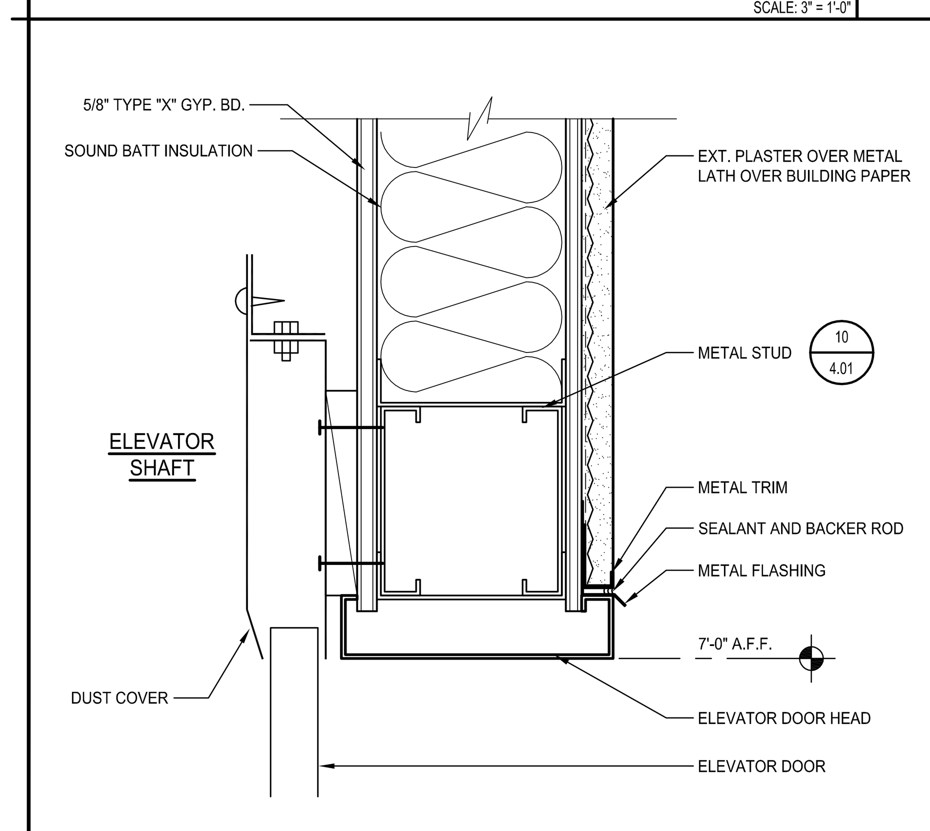

ELEVATOR DOOR HEAD (EXTERIOR) — 16
SCALE: 3" = 1'-0"

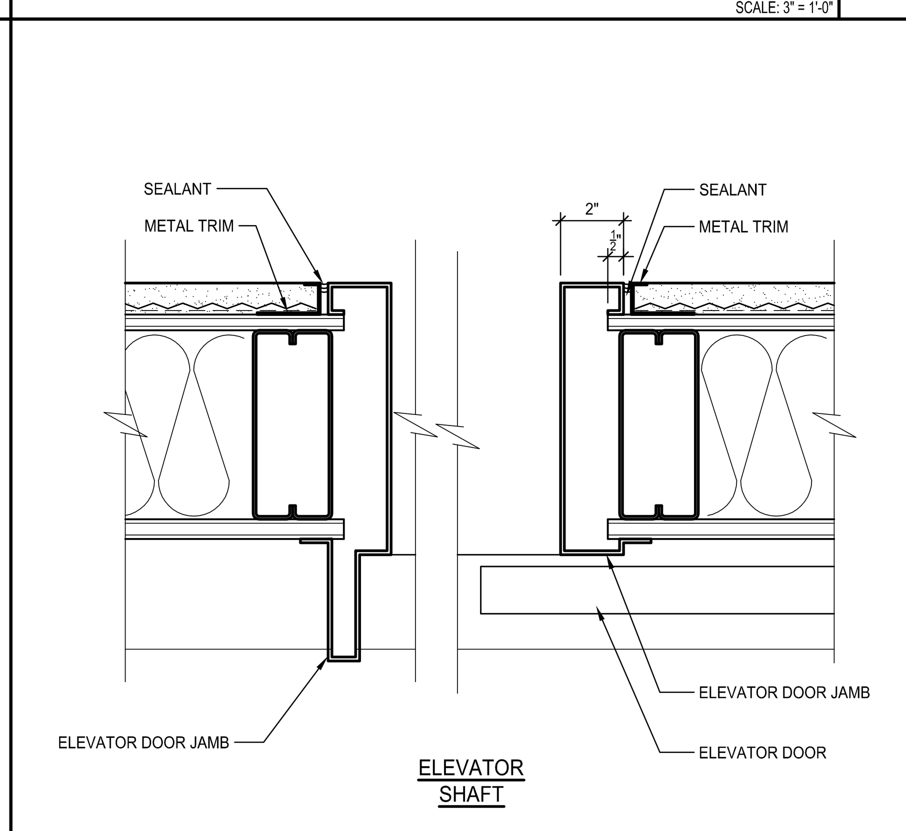

ELEVATOR DOOR JAMB (EXTERIOR) — 17
SCALE: 3" = 1'-0"

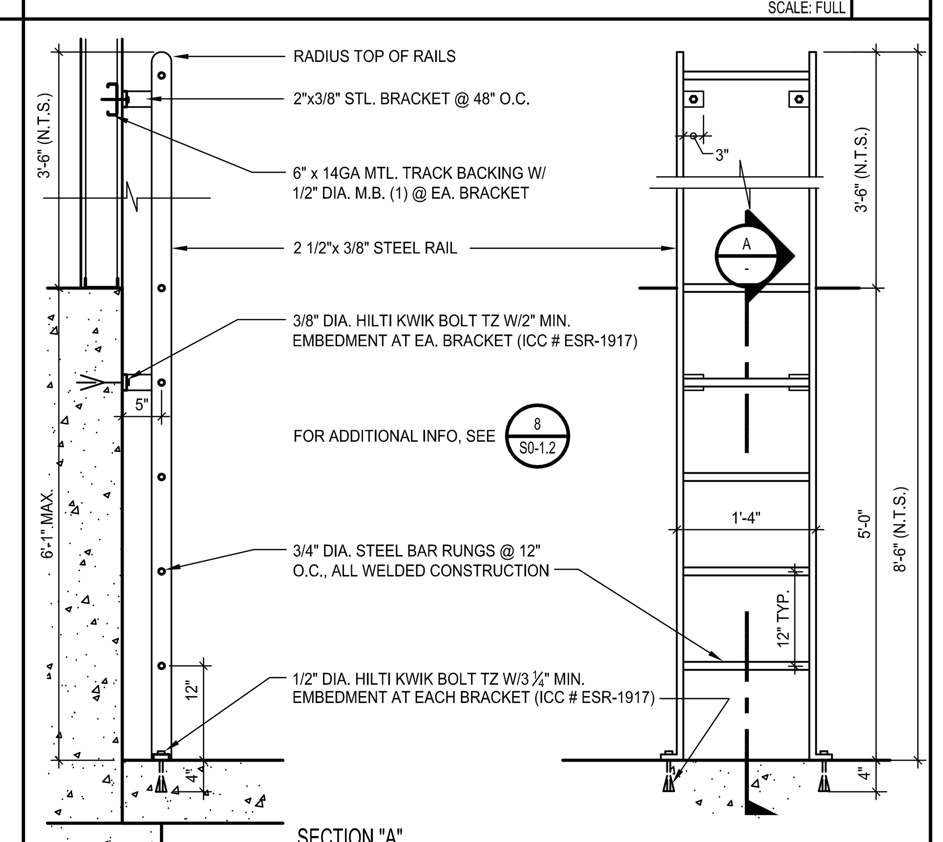

ELEVATOR PIT LADDER DETAIL — 19
SCALE: 3/4" = 1'-0"

PASSENGER ELEVATOR REQUIREMENTS
TYPICAL FOR ALL ELEVATORS
CHAPTER 11B - 2016 CALIFORNIA BUILDING CODE

1. GENERAL - SIZE OF CAB AND CONTROL LOCATIONS ARE REQUIRED TO ACCOMMODATE PERSONS WITH DISABILITIES. IN BUILDINGS TWO OR MORE STORIES IN HEIGHT, SERVED BY AN ELEVATOR, OR A BUILDING SERVED BY AN ELEVATOR REQUIRED BY CHAPTER 11, OR A BUILDING SERVED BY AN ELEVATOR REQUIRED FOR ACCESSIBILITY, ALL ELEVATORS PROVIDED SHALL ACCOMMODATE A WHEELCHAIR.
2. THE ELEVATOR SHALL BE PROVIDED WITH A SELF-LEVELING DEVICE THAT WILL BRING THE CAR TO THE FLOOR LANDINGS WITHIN A TOLERANCE OF PLUS OR MINUS 1/2 INCH (12.7MM) UNDER NORMAL LOADING AND UNLOADING CONDITIONS. THE CLEARANCE BETWEEN THE CAR PLATFORM SILL AND THE EDGE OF THE HOISTWAY LANDING SHALL BE NO GREATER THAN 1 1/4 INCHES (32MM). (11B-407.4.4)
3. MINIMUM CLEAR WIDTH FOR ELEVATOR DOORS SHALL BE 36 INCHES. (11B-407.4.1)
4. DOORS CLOSED BY AUTOMATIC MEANS SHALL BE PROVIDED WITH A DOOR-REOPENING DEVICE THAT WILL FUNCTION TO STOP AND REOPEN A CAR DOOR AND ADJACENT HOISTWAY DOOR IN CASE THE CAR DOOR IS OBSTRUCTED WHILE CLOSING. THIS DEVICE SHALL BE CAPABLE OF SENSING AN OBJECT OR PERSON IN THE PATH OF A CLOSING DOOR WITHOUT REQUIRING CONTACT FOR ACTIVATION AT A NOMINAL 5 INCHES AND 29 INCHES (127MM AND 737 MM) ABOVE THE FLOOR. (11B-407.3.3)
5. PROVIDE MINIMUM ACCEPTABLE TIME FROM NOTIFICATION THAT A CAR IS ANSWERING A CALL (LANTERN AND AUDIBLE SIGNAL) UNTIL THE DOORS OF THE CAR START TO CLOSE USING FORMULA GIVEN IN SECTION 11B-407.3.4.
6. THE MINIMUM ACCEPTABLE TIME FOR THE DOORS TO REMAIN OPEN SHALL BE NOT LESS THAN FIVE SECONDS (11B-407.3.5).
7. THE CAR INSIDE SHALL ALLOW FOR THE TURNING OF A WHEELCHAIR. THE MINIMUM CLEAR DISTANCE BETWEEN WALLS OR BETWEEN WALL AND DOOR, EXCLUDING RETURN PANELS, SHALL BE NOT LESS THAN 80 INCHES BY 54 INCHES (2032MM BY 1372MM) FOR CENTER OPENING DOORS AND 68 INCHES BY 54 INCHES FOR SIDE-SLIDE OPENING DOORS. SEE 2016 CBC FIGURE 11B-407.4.1. THE CENTERLINE OF ELEVATOR FLOOR BUTTONS SHALL BE NO HIGHER THAN 54 INCHES (1372MM) ABOVE THE FINISH FLOOR FOR SIDE APPROACH AND 48 INCHES (1219MM) FOR FRONT APPROACH. (11B-407.4.1) SEE DETAIL 2, THIS SHEET.
8. FLOOR BUTTONS SHALL BE PROVIDED WITH VISUAL INDICATORS TO SHOW WHEN EACH CALL IS REGISTERED. THE VISUAL INDICATORS SHALL BE EXTINGUISHED WHEN EACH CALL IS ANSWERED (11B-407.4.7.1.4). SEE DET. 3, THIS SHEET.
9. EMERGENCY TWO-WAY COMMUNICTATION SYSTEMS SHALL COMPLY WITH SECTION 11B-308. RAISED SYMBOLS OR CHARACTERS, WHITE ON BLACK BACKGROUND, AND BRAILLE SHALL BE PROVIDED ADJACENT TO THE DEVICE AND SHALL COMPLY WITH SECTIONS 11B-703.2 AND 11B-703.3. (11B-407.4.9) SEE DET. 2, THIS SHEET.
10. PASSENGER ELEVATOR CAR CONTROLS SHALL HAVE A MINIMUM DIMENSION OF 3/4 INCH (19.1MM) AND SHALL BE RAISED 1/8 INCH (3.2MM) PLUS OR MINUS 1/32 INCH (0.8MM) ABOVE THE SURROUNDING SURFACE. (11B-407.4.6.2.1) SEE DET. 9, THIS SHEET.
11. CONTROL BUTTONS SHALL BE ILLUMINATED, SHALL HAVE SQUARE SHOULDERS, AND SHALL BE ACTIVATED BY A MECHANICAL MOTION THAT IS DETECTABLE. ALL CONTROL BUTTONS SHALL BE DESIGNATED BY A 5/8 INCH MINIMUM (15.9MM) ARABIC NUMERAL, STANDARD ALPHABET CHARACTER, OR STANDARD SYMBOL IMMEDIATELY TO THE LEFT OF THE CONTROL BUTTON. A BRAILLE SYMBOL SHALL BE LOCATED IMMEDIATELY BELOW THE NUMERAL, CHARACTER OR SYMBOL. A MIN. CLEAR SPACE OF 3/8" (9.5MM) OR OTHER SUITABLE MEANS OF SEPARATION SHALL BE PROVIDED BETWEEN ROWS OF CONTROL BUTTONS. THE RAISED CHARACTERS SHALL BE WHITE ON A BLACK BACKGROUND. (11B-407.4.6.2) SEE DETAIL 9, THIS SHEET.
12. CONTROLS AND EMERGENCY EQUIPMENT IDENTIFIED BY RAISED SYMBOLS SHALL INCLUDE, BUT NOT BE LIMITED TO, DOOR OPEN, DOOR CLOSE, ALARM BELL, EMERGENCY STOP AND TELEPHONE. THE CALL BUTTON FOR THE MAIN ENTRY FLOOR SHALL BE DESIGNATED BY A RAISED STAR AT THE LEFT OF THE FLOOR DESIGNATION. (11B-407.4.6.2) SEE DETAIL 9, THIS SHEET.
13. THE CENTERLINE OF THE HALL CALL BUTTON SHALL BE WITHIN 42 INCHES (1067MM) OF THE FLOOR. BUTTONS SHALL BE A MINIMUM OF 3/4 INCH (19.1MM) IN SIZE AND SHALL BE RAISED 1/8 INCH (3.2MM) PLUS OR MINUS 1/32 INCH (0.8MM) ABOVE SURROUNDING SURFACE. VISUAL INDICATION SHALL BE PROVIDED TO SHOW EACH CALL REGISTERED AND EXTINGUISHED WHEN ANSWERED. OBJECTS ADJACENT TO, AND BELOW, HALL CALL BUTTONS SHALL NOT PROJECT MORE THAN 4 INCHES (102MM) FROM THE WALL (11B-407.2.1).
14. THE MINIMUM ILLUMINATION AT THE CAR CONTROLS, THRESHOLD AND THE LANDING WHEN THE CAR AND LANDING DOORS ARE OPEN SHALL NOT BE LESS THAN 5 FOOT-CANDLES (54 LUX). (11B-407.4.5)
15. A VISUAL AND AUDIBLE SIGNAL SHALL BE PROVIDED AT EACH HOISTWAY ENTRANCE INDICATING TO THE PROSPECTIVE PASSENGER THE CAR ANSWERING THE CALL AND ITS DIRECTION OF TRAVEL AS FOLLOWS:
   A. THE VISUAL SIGNAL FOR EACH DIRECTION SHALL BE A MINIMUM OF 2 1/2 INCHES (64MM) HIGH BY 2 1/2 (64MM) WIDE AND BE VISIBLE FROM THE PROXIMITY OF THE HALL CALL BUTTON
   B. THE AUDIBLE SIGNAL SHALL SOUND ONCE FOR THE UP DIRECTION AND TWICE FOR THE DOWN DIRECTION OR OF A CONFIGURATION THAT DISTINGUISHES BETWEEN UP AND DOWN ELEVATOR TRAVEL
   C. THE CENTERLINE OF THE FIXTURE SHALL BE LOCATED A MINIMUM OF 6 FEET (1829MM) IN HEIGHT FROM THE FLOOR OF THE LOBBY.
   D. THE USE OF IN-CAR LANTERNS, LOCATED IN OR ON THE CAR DOOR JAMBS, VISIBLE FROM PROXIMITY OF THE HALL CALL BUTTONS AND CONFORMING TO THE ABOVE REQUIREMENTS SHALL OR WILL BE ACCEPTABLE.
   E. USE OF ARROW SHAPES IS PREFERRED FOR VISIBLE SIGNALS (11B-407.2.2). SEE DETAIL 3, THIS SHEET.
16. PASSENGER ELEVATOR LANDING JAMBS ON ALL ELEVATOR FLOORS SHALL HAVE THE NUMBER OF THE FLOOR ON WHICH THE JAMB IS LOCATED DESIGNATED BY RAISED ARABIC NUMERALS WHICH ARE A MINIMUM OF 2 INCHES (51 MM) HIGH AND CONFORM TO SECTION 11B-703.2 AND GRADE 2 BRAILLE THAT CONFORMS TO SECTION 11B-703.4.1 LOCATED AT 48" MIN. TO BASELINE OF BRAILLE ABOVE THE FLOOR ON THE JAMB PANELS ON BOTH SIDES OF THE DOOR SO THAT THEY ARE VISIBLE FROM WITHIN THE ELEVATOR. RAISED BRAILLE SYMBOLS SHALL BE PLACED BELOW THE CORRESPONDING ARABIC NUMERALS. THE RAISED CHARACTERS SHALL BE ON A CONTRASTING BACKGROUND, SEE FIGURE 11B-407.2.3.1. (11B-407.2.3.1) SEE DETAILS 3 AND 14, THIS SHEET.
17. PASSENGER ELEVATORS SHALL BE LOCATED NEAR A MAJOR PATH OF TRAVEL AND PROVISIONS SHALL BE MADE TO ENSURE THAT THEY REMAIN ACCESSIBLE AND USABLE AT ALL TIMES THE BUILDING IS OCCUPIED. (11B-108)

GENERAL NOTES — 20
SCALE: FULL

IDENTIFICATION STAMP
DIV. OF THE STATE ARCHITECT
APP. 03-119458 INC:
REVIEWED FOR
SS ☑ FLS ☑ ACS ☑
DATE:05/23/2019

DIVISION OF STATE ARCHITECT
355 South Grand Avenue, Suite 2100
Los Angeles, California. 90012
ph: (213) 897-3995 Fax: (213) 897-3159
agency

tBP architecture planning interiors

LICENSED ARCHITECT GARY PAIGE MOON NO. C25409 REN. 7-31-19 STATE OF CALIFORNIA

tBP/Architecture
4611 Teller Avenue
Newport Beach, CA 92660
ph: 949.673.0300 fx: 949.732.3895
architect

consultant

COMPTON COLLEGE
INSTRUCTIONAL BUILDING No. 2
COMPTON COMMUNITY COLLEGE DISTRICT
1111 E. ARTESIA BLVD. COMPTON, CA.
owner

tBP project number : 20998.00
file name: 1401-MD_elevator.dwg
drawn by: checked by:
date: 04/08/2019
Rev: date: description:

THIS DRAWING AND THE DESIGNS, DEPICTIONS, IDEAS AND OTHER INFORMATION CONTAINED HEREIN CONSTITUTE UNPUBLISHED WORK OF tBP/ARCHITECTURE AND SHALL REMAIN THE PROPERTY OF tBP/ARCHITECTURE IN PERPETUITY. NO PART THEREOF SHALL BE REPRODUCED, DISCLOSED, DISTRIBUTED, SOLD, PUBLISHED OR OTHERWISE USED IN ANY WAY WITHOUT THE ADVANCED EXPRESS WRITTEN CONSENT OF tBP/ARCHITECTURE.

drawing title:
ELEVATOR DETAILS

drawing no.: 14.01
drawing of

GENERAL NOTES:

1. DETAILS OF CONSTRUCTION NOT SHOWN SHALL BE OF SAME NATURE AS THOSE SHOWN FOR SIMILAR CONDITIONS. REFER TO THE TYPICAL DETAIL SHEETS FOR TYPICAL DETAILS OF CONSTRUCTION. TYPICAL DETAILS APPLY TO ALL CONSTRUCTION UNLESS SPECIFICALLY NOTED OR SHOWN OTHERWISE. WHERE CONDITIONS REQUIRE MODIFICATIONS OF A TYPICAL DETAIL, THE CONTRACTOR SHALL SUBMIT MODIFIED DETAIL FOR APPROVAL BY THE ENGINEER OF RECORD PRIOR TO FABRICATION AND INSTALLATION. DETAILS OF CONSTRUCTION NOT SHOWN SHALL BE OF SAME NATURE AS THOSE SHOWN FOR SIMILAR CONSTRUCTION.
2. CONTRACTOR SHALL CONSIDER THE PROJECT SPECIFICATIONS A PART OF THE CONTRACT DOCUMENTS. WHERE INFORMATION IS CONFLICTING, SPECIFIC DETAILS SHALL GOVERN OVER TYPICAL DETAILS WHICH SHALL GOVERN OVER THESE NOTES WHICH SHALL GOVERN OVER SPECIFICATIONS.
3. REFER TO THE PROJECT SPECIFICATIONS FOR SHOP DRAWING REQUIREMENTS AND SUBMITTALS.
4. ALL DIMENSIONS ON STRUCTURAL DRAWINGS SHALL BE CHECKED AGAINST ARCHITECTURAL DIMENSIONS. DO NOT SCALE DRAWINGS. IF DIMENSIONS ARE OMITTED OR NOT CLEAR, CONTACT THE ARCHITECT (ARCH) OR STRUCTURAL ENGINEER OF RECORD (SEOR). ALL DIMENSIONS RELATED TO EXISTING CONDITIONS SHALL BE FIELD VERIFIED BY THE CONTRACTOR. DIMENSIONS ARE TO THE FACE OF STUDS, AND TO CENTERLINE OF COLUMNS UNO.
5. IT IS THE CONTRACTOR'S RESPONSIBILITY TO IMMEDIATELY NOTIFY THE SEOR OF ANY CONFLICTS BETWEEN THE STRUCTURAL DRAWINGS AND OTHER DRAWINGS; OR EXISTING CONDITIONS NOT SHOWN OR DIFFERENT FROM THOSE SHOWN ON DRAWINGS PRIOR TO COMMENCEMENT OF WORK. THE CONTRACTOR IS NOT TO ORDER MATERIAL OR CONSTRUCT ANY PORTION OF THE BUILDING THAT IS IN CONFLICT UNTIL THE CONFLICT IS RESOLVED WITH THE AFFECTED PARTIES.
6. THE STRUCTURAL DRAWINGS AND SPECIFICATIONS REPRESENT THE FINISHED STRUCTURE. UNLESS OTHERWISE SHOWN THEY DO NOT INDICATE METHOD OF CONSTRUCTION. THE CONTRACTOR SHALL PROVIDE ALL MEASURES NECESSARY TO PROTECT THE CONSTRUCTION AND ALL ADJACENT PROPERTIES DURING CONSTRUCTION. SUCH MEASURES SHALL INCLUDE BUT ARE NOT LIMITED TO BRACING, SHORING OF LOADS DUE TO CONSTRUCTION EQUIPMENT, ETC. OBSERVATION VISITS TO THE SITE BY THE ARCHITECT OR SEOR SHALL NOT INCLUDE OBSERVATION OF THE ABOVE ITEMS.
7. SUBSTITUTION REQUESTS FOR MATERIALS SPECIFIED ON THE STRUCTURAL DRAWINGS MAY BE CONSIDERED WITH MATERIALS HAVING EQUIVALENT OR GREATER CAPACITY AND PERFORMANCE. CURRENT EVALUATION REPORTS AND PRODUCT INFORMATION SHALL BE PROVIDED TO THE STRUCTURAL ENGINEER DEMONSTRATING THE REQUIRED CAPACITY AND PERFORMANCE OF THE MATERIAL TO BE SUBSTITUTED. WRITTEN APPROVAL FROM THE SEOR SHALL BE OBTAINED PRIOR TO THE SUBSTITUTION OF ANY MATERIAL SPECIFIED ON THE STRUCTURAL DOCUMENTS.
8. IT IS THE CONTRACTOR'S RESPONSIBILITY TO COMPLY WITH THE PERTINENT SECTIONS OF THE "CONSTRUCTION SAFETY ORDERS" ISSUED BY THE STATE OF CALIFORNIA, LATEST EDITION, AND ALL OSHA REQUIREMENTS AS THEY APPLY TO THIS PROJECT. THE ARCHITECT, SEOR, AND THE OWNER DO NOT ACCEPT ANY RESPONSIBILITY FOR THE CONTRACTOR'S FAILURE TO COMPLY WITH THESE REQUIREMENTS.
9. ALL WORK IS NEW (N) UNLESS INDICATED AS EXISTING (E).
10. CONSTRUCTION MATERIALS SHALL BE DISTRIBUTED WHEN PLACED ON THE STRUCTURE SUCH THAT LOADS DO NOT EXCEED DESIGN LIVE LOADS OR RESULT IN AN UNBALANCED CONDITION.

STRUCTURAL DESIGN CRITERIA:

1. CODES:
   ALL WORK SHALL BE IN CONFORMANCE WITH THE CALIFORNIA BUILDING CODE (CBC) 2016 EDITION, INCLUDING ALL AMENDMENTS. ALL STANDARDS USED SHALL BE THE LATEST VERSION APPROVED BY THE CODE ENFORCEMENT AGENCY ON THE DATE OF THE PERMIT ISSUANCE UNLESS SPECIFICALLY NOTED OTHERWISE.
2. SEISMIC DESIGN INFORMATION:
3.

I = 1.25	OCCUPANCY CAT. III		SITE CLASS D	DESIGN PROCEDURE: MODEL RESPONSE SPECTRUM
S_S = 1.674	S_1 = 0.611	S_{DS} = 1.116	S_{D1} = 0.611	
SEISMIC DESIGN CATEGORY = D				
SLRS: BUCKLING RESTRAINED BRACED FRAME SYSTEM				
Rho = 1.3	R =8	C_d = 5	Ω = 2.5	
HORIZ IRREG: TYPE 1A, 2.				
VERT IRREG : TYPE 3				
BASE: 12" BELOW 1ST FLOOR F.F.				
BASE SHEAR: V_b= 497k				

4. WIND DESIGN INFORMATION:

OCCUPANCY CAT. III	K_z = 1.07	K_d = 0.85	K_{zt} = 1
BASIC WIND SPEED V_{fm} = 115 MPH (3 SEC GUST)		EXPOSURE C	
INTERNAL PRESSURE COEFF. = +/- 0.18			

EXISTING CONDITIONS NOTES:

1. FIELD VERIFY ALL CONDITIONS & DIMENSIONS PRIOR TO SHOP DRAWING PRODUCTION AND FABRICATION OF STRUCTURAL ELEMENTS.
2. WHERE ALL OTHER EXISTING CONDITIONS VARY SIGNIFICANTLY FROM THOSE SHOWN ON THESE DRAWINGS, THE STRUCTURAL ENGINEER SHALL BE NOTIFIED PRIOR TO CONTINUED CONSTRUCTION RELATED TO SUBJECT CONDITIONS.
3. SHORE ALL EXISTING CONSTRUCTION AS REQUIRED.
4. ALL EXISTING (E) CONNECTIONS AT ELEMENTS TO BE REPLACED SHALL BE REPLACED OR RE-ATTACHED TO MATCH EXISTING CONDITIONS.
5. VERIFY LOCATION OF EXISTING (E) REBAR BEFORE FABRICATION USING NON-DESTRUCTIVE TESTING.
6. SPECIAL INSPECTION IS REQUIRED FOR ALL WORK.
7. SEE "AS BUILT" DRAWINGS FOR EXISTING BUILDING DESIGN FOR ITEMS NOT SHOWN OR NOTED.
8. ALL EXISTING (E) WOOD ELEMENTS TO REMAIN SHALL BE FIELD INSPECTED DURING CONSTRUCTION AND TREATED FOR DRYROT REMOVAL / CONTROL. WHERE EXISTING GLB'S TO REMAIN ARE FOUND TO HAVE EXTENSIVE DRYROT DEEPER THAN THE TOP TWO LAMINATIONS (3"), THE STRUCTURAL ENGINEER SHALL BE NOTIFIED PRIOR TO CONTINUED CONSTRUCTION RELATED TO SUBJECT GLB'S.
7. CORE DRILLS REQUIRED SHALL NOT CUT ANY REINFORCING. THE CONTRACTOR IS TO COORDINATE WORK OF ALL TRADES TO ENSURE COMPLIANCE. ALL CORE DRILLS ARE TO BE PRESENTED TO THE IOR FOR VERIFICATION. THE IOR IS TO DOCUMENT CORES EXAMINED INDICATING AN ABSENCE OF REINFORCING.

EXISTING UNDERGROUND UTILITY NOTES:

1. THE ARCHITECT AND ENGINEERS ARE NOT RESPONSIBLE FOR THE LOCATIONS OF EXISTING UNDERGROUND UTILITIES WHETHER OR NOT SHOWN ON THE DRAWINGS. THE LOCATION OF ANY EXISTING UNDERGROUND UTILITIES SHOWN ON THE DRAWINGS ARE APPROXIMATE. THE CONTRACTOR SHALL IMMEDIATELY NOTIFY THE OWNER SHOULD ANY SUCH UNIDENTIFIED CONDITIONS BE DISCOVERED.

2. THE CONTRACTOR SHALL BE RESPONSIBLE FOR ANY DAMAGES WHICH MAY RESULT FROM HIS FAILURE TO EXACTLY LOCATE AND PRESERVE ALL EXISTING UNDERGROUND UTILITIES.

HIGH-STRENGTH BOLT NOTES:

1. SEE STRUCTURAL STEEL NOTES THIS SHEET FOR ADDITIONAL INFORMATION.
2. JOINT ASSEMBLIES USING HIGH-STRENGTH BOLTS SHALL BE IN ACCORDANCE WITH THE CURRENT EDITION OF THE "AISC SPECIFICATION FOR STRUCTURAL JOINTS USING ASTM A325 OR A490 BOLTS". SLIP-CRITICAL BOLTS SHALL BE USED FOR ALL "SEISMIC LOAD RESISTING SYSTEM" (SLRS) MEMBER STEEL TO STEEL CONNECTIONS.
3. ALL HIGH-STRENGTH BOLTS SHALL CONFORM TO ASTM A-325 OR ASTM A-490, NUTS SHALL CONFORM TO ASTM A-563 AND WASHERS SHALL CONFORM TO ASTM F-436.
4. PAINT SHALL NOT BE PERMITTED ON CONTACT SURFACES UNLESS NOTED OTHERWISE. CONTACT SURFACES OF BOLTED PARTS SHALL BE DESCALED AND FREE OF DIRT, OIL, BURRS, PITS, AND OTHER DEFECTS WHICH PREVENT SOLID SEATING OF PARTS. FAYING SURFACE SHALL BE CLASS B.
5. SLIP-CRITICAL JOINT ASSEMBLIES SHALL BE FULLY PRE-TENSIONED BY TURN-OF-NUT TIGHTENING, CALIBRATED WRENCH TIGHTENING, INSTALLATION OF ALTERNATE DESIGN BOLTS OR BY DIRECT TENSION INDICATOR TIGHTENING.
6. HIGH STRENGTH BOLTS SHALL BE INSTALLED IN ACCORDANCE WITH THE CURRENT EDITION OF THE "AISC SPECIFICATION FOR STRUCTURAL JOINTS USING ASTM A325 OR A490 BOLTS". SLIP CRITICAL BOLTS (SC) SHALL BE USED FOR ALL "LATERAL FORCE RESISTING SYSTEM" (LFRS) MEMBER STEEL-TO-STEEL CONNECTIONS. TIGHTEN SLIP CRITICAL BOLTS USING ONE OF THE FOLLOWING: TWIST-OFF BOLTS, TENSION CONTROL CALIBRATED WRENCH OR DIRECT TENSION INDICATORS. HIGH STRENGTH BOLTS NOT IN THE SLRS MAY BE INSTALLED SNUG TIGHT.

REINFORCING STEEL NOTES:

1. REINFORCING GRADES FOR CONCRETE OR MASONRY:
   A. ALL BARS EXCEPT THOSE TO BE WELDED................ ASTM A615, GRADE 60
   B. TIES AND STIRRUPS .... ASTM A615, GRADE 60
   C. WELDED WIRE FABRIC .... ASTM A185
   D. ALL BARS TO BE WELDED .... ASTM A706, GRADE 60
2. MAINTAIN MINIMUM CONCRETE COVER FROM FACE OF CONCRETE TO EDGE OF ALL REINFORCEMENT AS FOLLOWS (UNO):

CONDITION		COVER
CONCRETE POURED AGAINST EARTH		3"
CONCRETE POURED IN FORMS AND EXPOSED TO WEATHER OR EARTH		
	- #6 BARS AND LARGER	2"
	- #5 BARS AND SMALLER	1 1/2"
STRUCTURAL SLABS ON GRADE		
	- FROM BOTTOM OF SLAB	2"
	- FROM TOP OF SLAB	1 1/2"
OTHER CONCRETE NOT EXPOSED TO WEATHER OR EARTH FOR #11 BARS AND SMALLER		3/4"

   PROVIDE THE LARGEST COVER REQUIRED FOR ALL APPLICABLE CONDITIONS. WHERE #3 STIRRUPS OR TIES ARE USED, ENSURE THAT THE COVER FOR LONGITUDINAL BARS IS ADEQUATE.
3. REINFORCEMENT SHALL BE PLACED IN ACCORDANCE WITH THE CONCRETE REINFORCING STEEL INSTITUTE (CRSI) "MANUAL OF STANDARD PRACTICE". EACH REINFORCING BAR SHALL BE WIRED TO A CROSS BAR AT A MAXIMUM SPACING OF 24" OC. PROVIDE ALL ACCESSORIES NECESSARY TO SUPPORT REINFORCING IN POSITIONS SHOWN ON THE PLANS.
4. SPLICES IN CONTINUOUS REINFORCEMENT AS USED IN WALLS, WALL FOOTINGS, ETC., SHALL HAVE A CLASS "B" LAP (1'-6" MIN) AND THE SPLICES IN ADJACENT BARS SHALL BE NOT LESS THAN 5'-0" APART. VERTICAL WALL BARS SHALL BE SPLICED AT OR NEAR FLOOR LINES. BARS MAY BE WIRED TOGETHER AT SPLICES OR LAPS EXCEPT FOR TOP REINFORCING OF BEAMS AND SLABS OR WHERE SPECIFICALLY DETAILED TO BE SEPARATED. WELDED WIRE FABRIC SHALL BE LAPPED 12" MINIMUM.
5. ALL DOWELS, ANCHOR BOLTS AND OTHER HARDWARE TO BE SET IN CONCRETE SHALL BE TIED IN PLACE PRIOR TO PLACEMENT OF CONCRETE. NO WET SETTING, STABBING, RODDING OR OTHER MOVEMENT OF EMBEDDED ITEMS SHALL BE PERFORMED DURING PLACEMENT OF CONCRETE.
6. BEND REINFORCING BARS COLD.
7. STEEL SHALL BE KEPT CLEAN AND FREE OF RUST.
8. DOWELS BETWEEN FOOTING AND WALLS OR COLUMNS SHALL BE THE SAME GRADE, SIZE AND SPACING AS THE MAIN REINFORCING UNO.
9. ALL BARS SHALL BE MARKED SO THEIR IDENTIFICATION CAN BE MADE WHEN THE FINAL IN PLACE INSPECTION IS MADE.
10. CHAIRS OR SPACERS FOR REINFORCING SHALL BE NON-FERROUS OR PLASTIC COATED WHEN RESTING ON EXPOSED SURFACES.

STRUCTURAL CONCRETE NOTES:

1. CONCRETE SHALL BE MIXED, PLACED AND CURED IN ACCORDANCE WITH ACI 318, 2014 EDITION, AND PROJECT SPECIFICATIONS.
2. CONCRETE SHALL NOT BE DROPPED THROUGH REINFORCING STEEL (AS IN WALLS) SO AS TO CAUSE SEGREGATION OF AGGREGATES. IN SUCH CASES, HOPPERS AND VERTICAL CHUTES OR TRUNKS SHALL BE USED. CHUTES OR TRUNKS SHALL BE OF VARIABLE LENGTHS SO THAT FREE UNCONFINED FALL OF CONCRETE SHALL NOT EXCEED SIX FEET. A SUFFICIENT NUMBER OF CHUTES OR TRUNKS SHALL BE USED TO ENSURE THE CONCRETE IS KEPT LEVEL AT ALL TIMES.
3. CONSTRUCTION JOINTS SHALL BE CLEANED AND ROUGHENED BY REMOVING THE ENTIRE SURFACE TO EXPOSE CLEAN AGGREGATE SOLIDLY EMBEDDED IN THE MORTAR MATRIX. SLUSH WITH A COAT OF NEAT CEMENT BEFORE PLACING CONCRETE. SEE PLANS AND DETAILS FOR LOCATION AND TYPE OF CONSTRUCTION JOINT. LOCATIONS OF ADDITIONAL CONSTRUCTION JOINTS NOT SHOWN ON THESE PLANS SHALL BE SUBMITTED FOR APPROVAL BY THE EOR PRIOR TO PLACING ANY CONCRETE.
4. STRUCTURAL CONCRETE SHALL MEET THE FOLLOWING DESIGN CRITERIA:

LOCATION	MIN 28-DAY COMP STRENGTH	CONC TYPE [a]	MAX AGGR. SIZE	MAX W/C RATIO	MAX SLUMP [b]
FOUNDATIONS STEMWALL, PILASTER	4000 PSI	NWC	1 1/2"	0.45	4"
SLAB ON GRADE	4000 PSI	NWC	1"	0.45	4"
FILL OVER METAL DECK	3000 PSI	LWC [a]	3/4"	0.45	6"
ALL OTHER STRUCTURAL CONCRETE NOT NOTED ABOVE	4000 PSI	NWC	1"	0.50	6"

   a. MAXIMUM DRY WEIGHT OF LIGHTWEIGHT CONCRETE SHALL BE 113 PCF, UNLESS APPROVED BY SEOR.
   b. SLUMP MEASURED PRIOR TO SUPERPLASTICIZER, WHERE OCCURS.
   c. USE TYPE II / TYPE V CEMENT.
5. CONCRETE MIX DESIGN AND TESTING SHALL MEET THE REQUIREMENTS OF THE BUILDING CODE, AND SPECIFICATIONS. ALL CONCRETE MIXES SHALL BE DESIGNED BY A RECOGNIZED TESTING LAB STAMPED AND SEALED BY A LICENSED CALIFORNIA CIVIL ENGINEER AND SUBMITTED TO THE SEOR FOR REVIEW PRIOR TO CONCRETE PLACEMENT. STRUCTURAL CONCRETE MIXES SHALL CONSIST OF 5 SACK MINIMUM UNO.
6. AGGREGATES IN NORMAL WEIGHT CONCRETE SHALL CONFORM TO ASTM C-33 (HARDROCK). AGGREGATES IN LIGHT WEIGHT CONCRETE SHALL CONFORM TO ASTM C-330.
7. COMPRESSIVE STRENGTH TEST REPORTS SHALL BE SUBMITTED TO THE BUILDING DEPARTMENT AND THE SEOR.
8. PORTLAND CEMENT SHALL BE TYPE II FOR ALL CONCRETE CONFORMING TO ASTM C150, LOW ALKALI. MILL TESTS WITH CERTIFICATES OF COMPLIANCE SHALL BE SUBMITTED.
9. FLY ASH OR OTHER POZZOLANS CONFORMING TO ASTM C618 CLASS N OR F MAY BE USED AS A PARTIAL SUBSTITUTION FOR PORTLAND CEMENT UP TO A MAXIMUM OF 15% TOTAL CEMENTITIOUS MATERIALS BY WEIGHT IF THE MIX DESIGN IS PROPORTIONED PER ACI 318, SECTION 5.3.
10. CONCRETE MIXING OPERATIONS, ETC. SHALL CONFORM TO ASTM C94.
11. LEAN CONCRETE, WHERE SPECIFICALLY INDICATED, SHALL CONTAIN 2 SACKS OF CEMENT PER CUBIC YARD OF CONCRETE.
12. DRYPACK OR NONSHRINK GROUT SHALL HAVE A MINIMUM 28 DAY COMPRESSIVE STRENGTH OF 2 TIMES THE SUPPORTING CONCRETE STRENGTH, AND SHALL BE OF MASTERFLOW 713, FIVE STAR GROUT, SIKA GROUT 212, EMBECO 636, OR APPROVED EQUAL. FOR THICK GROUT LAYERS FOLLOW MANUFACTURER'S GUIDELINES TO ATTAIN THE REQUIRED STRENGTH, WHICH MAY INCLUDE THE ADDITION OF PEA GRAVEL.
13. DO NOT USE ANY CONCRETE OR GROUT CONTAINING CHLORIDES. WATER USED IN MIX SHALL BE CLEAN AND POTABLE.
14. PRIOR TO ERECTING ANY ELEMENTS THAT LOAD THE FOUNDATION, CONCRETE MUST REACH AN UNCONFINED COMPRESSION STRENGTH OF 2000 PSI MINIMUM AS DETERMINED BY TESTING OR PREVIOUSLY DOCUMENTED DATA FOR THE MIX DESIGN USED UNDER SIMILAR CONDITIONS, AND MUST BE ALLOWED TO CURE FOR A MINIMUM OF 3 DAYS.
15. FOR INTERIOR SLABS-ON-GRADE AND ALL OTHER SLABS RECEIVING ADHERED FLOORING FINISHES (I.E., GLUED, ETC.), THE MAXIMUM W/C RATIO SHALL NOT EXCEED 0.45. CURING COMPOUNDS USED ON CONCRETE THAT IS TO RECIEVE FINISHES SHALL BE COMPATIBLE WITH TILE AND ADHESIVES OR GROUTS IN ACCORDANCE WITH MANUFACTURER'S DATA AND BE APPROVED BEFORE USE.
16. MAINTAIN CONCRETE ABOVE 50 DEGREES FAHRENHEIT AND IN A MOIST CONDITION FOR A MINIMUM OF 7 DAYS AFTER PLACEMENT UNLESS OTHERWISE ACCEPTED BY SEOR.
17. SEE ARCHITECTURAL DRAWINGS FOR WALL OPENINGS, WALL OFFSETS, CHAMFERS, KERFS, DRIPS AND FOR EXTENT OF DEPRESSIONS, RAMPS, ETC. PROVIDE SLEEVES FOR ALL PIPES THROUGH CONCRETE WALLS AND FOOTINGS WHERE SHOWN ON THESE DRAWINGS. CORING IS NOT PERMITTED WITHOUT PRIOR APPROVAL BY THE SEOR.
18. EXPOSED CORNERS OF SLABS, BEAMS, WALLS, COLUMNS, ETC. SHALL BE FORMED WITH 3/4" CHAMFER, UNO.

FOUNDATION AND SLAB ON GRADE NOTES:

1. SEE SOIL REPORT BY: UNITED-HEIDER INSPECTION GROUP
   REPORT NO.: 10-18020PW DATED: FEBRUARY 21, 2018
   RESPONSE TO CGS DATED: MAY 8, 2018
   RESPONSE TO CGS DATED: JUNE 15, 2018
   CGS APPROVAL DATED: JULY 30, 2018

   SOILS REPORT SHALL BE CONSIDER A PART OF THESE CONSTRUCTION DOCUMENTS
2. ALLOWABLE MAT FTG VERTICAL BEARING PRESSURE
   DEAD LOAD + LIVE LOAD = ... 1200PSF
   DEAD LOAD + LIVE LOAD + LATERAL LOAD = ... 1596PSF

   ALLOWABLE MAT FTG LATERAL BEARING PRESSURE IS 200 PSF PER FT OF DEPTH.

   ALLOWABLE MAT FTG COEFFICIENT OF FRICTION FOR SLIDING: 0.30

   ALLOWABLE SITE WALL / BENCH SHALOW FOUNDATION VERTICAL BEARING PRESSURE
   DEAD LOAD + LIVE LOAD = ...1500 PSF
   DEAD LOAD + LIVE LOAD + LATERAL LOAD = ...1995 PSF

   ALLOWABLE SITE WALL / BENCH SHALOW FOUNDATION LATERAL BEARING PRESSURE IS 200 PSF PER FT OF DEPTH.

   ALLOWABLE SITE WALL / BENCH SHALOW FOUNDATION COEFFICIENT OF FRICTION FOR SLIDING: 0.30
3. THE CONTRACTOR SHALL CONFORM TO ALL RECOMMENDATIONS AND CONDITIONS INDICATED IN THE SOIL REPORT. THE GEOTECHNICAL ENGINEER SHALL OBSERVE ALL FOOTING EXCAVATIONS PRIOR TO PLACING CONCRETE.
4. SUBSURFACE SOIL PREPARATION:
   A. ALL EXISTING UNDOCUMENTED FILL SHALL BE REMOVED AND RECOMPACTED. ALL TOPSOILS SHALL BE REMOVED AS REQUIRED BY THE GEOTECHNICAL ENGINEER.
   B. GEOTECHNICAL ENGINEER SHALL BE RETAINED DURING THE OVEREXCAVATION PROCESS. THE ACTUAL DEPTH OF REMOVAL WILL BE DETERMINED DURING GRADING OPERATIONS.
   C. OFFSITE FILL MATERIAL SHALL BE APPROVED BY THE GEOTECHNICAL ENGINEER PRIOR TO PLACEMENT.
8. SPREAD FOOTINGS ARE CENTERED UNDER WALLS AND COLUMNS, UNO.
9. FOOTING ELEVATIONS ARE NOTED ON THE PLANS AND DETAILS AND SHALL BE USED FOR BIDDING. IN ANY CASE, FOOTINGS SHALL BEAR ON FIRM UNDISTURBED SOIL OR ENGINEERED FILL, IN ACCORDANCE WITH THE SOIL REPORT AND DETAILS SHOWN.
10. CONTRACTOR SHALL PROTECT ALL UTILITY LINES, ETC. ENCOUNTERED DURING EXCAVATION AND BACKFILLING.
11. FOOTING BACKFILL AND UTILITY TRENCH BACKFILL WITHIN BUILDING AREA SHALL BE MECHANICALLY COMPACTED IN LAYERS WITH THE APPROVAL OF THE GEOTECHNICAL ENGINEER. FLOODING IS NOT PERMITTED.
12. ALL TRENCHES SHALL COMPLY WITH APPLICABLE OSHA REQUIREMENTS.
13. ALL EXCAVATIONS SHALL BE PROPERLY BACKFILLED BUT NOT BEHIND RETAINING WALLS BEFORE CONCRETE OR MASONRY ATTAINS ITS FULL DESIGN STRENGTH.
14. THE DESIGN OF ALL RETAINING WALLS AND SUBTERRANEAN BUILDING WALLS INDICATED ON THESE DRAWINGS IS BASED ON DRAINED SOILS.
15. CONSTRUCTION JOINTS (CJ) AND SAWCUT (SC) JOINTS IN SLABS SHALL OCCUR WHERE LOCATED ON PLANS AND DETAILS. CJ'S SHALL HAVE FORMED POUR STOPS. CONSTRUCTION JOINTS IN WALLS AND FOOTINGS NEED NOT OCCUR AT THE SAME LOCATION, UNO.
16. SEE ARCHITECT'S PLANS FOR LOCATIONS OF SLAB SLOPES, DEPRESSIONS, CURBS, DRAINS, NON-STRUCTURAL PARTITIONS AND OTHER EMBEDDED ITEMS NOT SHOWN ON THE STRUCTURAL PLANS.
17. ALL GRADING, FOUNDATION FOOTINGS, AND DRAINAGE PLANS SHALL BE REVIEWED BY THE GEOTECHNICAL ENGINEER UPON SUBMITTAL. A CERTIFIED LETTER BY THE GEOTECHNICAL ENGINEER IS REQUESTED STATING THAT THE RECOMMENDATIONS CONTAINED WITHIN THE SOILS REPORT HAVE BEEN INCORPORATED INTO THE PROJECT PLANS AND SPECIFICATIONS PRIOR TO CONSTRUCTION.
18. PRIOR TO THE CONTRACTOR REQUESTING A BUILDING DEPARTMENT FOUNDATION INSPECTION, THE SOILS ENGINEER SHALL ADVISE THE BUILDING OFFICIAL IN WRITING THAT:
   A. THE BUILDING PAD WAS PREPARED IN ACCORDANCE WITH THE SOILS REPORT.
   B. THE UTILITY TRENCHES HAVE BEEN PROPERLY BACKFILLED AND COMPACTED.
   C. THE FOUNDATION EXCAVATIONS COMPLY WITH THE INTENT OF THE SOILS REPORT.

MASONRY NOTES:

1. MASONRY UNITS SHALL DEVELOP THE FOLLOWING MINIMUM 28 DAY PRISM COMPRESSIVE STRENGTHS IN ACCORDANCE WITH THE BUILDING CODE:

MINIMUM 28 DAY COMPRESSIVE STRENGTH			
LOCATION	f'm	TYPE S MORTAR PER ASTM C270	GROUT PER CBC 2103A.13
ALL MASONRY U.N.O.	2000 psi	2000 psi	2000 psi

2. CONCRETE BLOCK SHALL CONFORM TO ASTM C90 MEDIUM WEIGHT. CLAY BRICK BLOCK SHALL CONFORM TO ASTM C652
3. PRISM TEST SHALL BE PERFORMED FOR MASONRY WITH f'm OVER 2000 PSI FOR CBC 2105A.2
4. VERTICAL REINFORCING SHALL BE FULL HEIGHT OF WALL AND SHALL BE BRACED AT 6'-8" MAXIMUM TO PREVENT MOVEMENT WHILE GROUTING.
5. HORIZONTAL REINFORCING SHALL BE IN BOND BEAM UNITS AND TIED SECURELY TO VERTICAL REINFORCING.
6. DOWELS, ANCHORS, AND OTHER EMBEDDED ITEMS SHALL BE TIED SECURELY IN PLACE TO PREVENT MOVEMENT WHILE GROUTING. WET SETTING OR STABBING IS NOT ALLOWED.
7. MAXIMUM GROUT LIFTS SHALL NOT EXCEED 8'-0" AND CLEANOUTS AT THE BOTTOM OF ALL CELLS SHALL BE USED UNLESS THE LIFT IS 4'-0" OR LESS. THE CLEANOUTS SHALL BE SEALED BEFORE GROUTING. GROUT FOR EACH POUR SHALL BE STOPPED 1 1/2" BELOW THE TOP OF A BLOCK COURSE EXCEPT AT THE FINAL COURSE. ALL GROUT SHALL BE THOROUGHLY CONSOLIDATED BY VIBRATING IMMEDIATELY AFTER PLACING. SHAKING OR RODDING REBAR IS NOT ALLOWED. FILL ALL CELLS WITH GROUT.
8. BLOCK SHALL BE PLACED IN RUNNING BOND AND SHALL BE 8"x8"x16" NOMINAL UNITS, UNO. WHERE BLOCK IS REQUIRED TO BE PLACED IN STACK BOND (SEE ARCH), OPEN-ENDED UNITS (I.E., "SPEED BLOCK") SHALL BE USED.
9. THE CONTRACTOR IS RESPONSIBLE FOR DETERMINING THE SAFETY OF LIFT HEIGHT FOR OPEN ENDED OR FIELD MODIFIED BLOCKS.
10. LAYOUT OF MASONRY BLOCK UNITS SHALL BE RUNNING BOND, U.N.O. BLOCK MODULES/MORTAR JOINTS SHOWN ON THESE DRAWINGS ARE FOR PRESENTATION PURPOSES ONLY, AND NOT INTENDED TO SUPERCEDE ARCHITECTURAL DESIGN REQUIREMENTS.
11. WALL REINFORCEMENT SEE PLANS & ELEVATIONS
12. WHEN THE AMBIENT TEMPERATURE FALLS BELOW 40°F, OR EXCEEDS 100°F, PROVSIONS OF TMS602 / ACI 530 / ASCE6. ARTICLE 1.8C OR ARTICLE 1.8D SHALL BE IMPLEMENTED.

STRUCTURAL STEEL NOTES:

1. DESIGN, FABRICATION AND ERECTION OF STRUCTURAL STEEL SHALL CONFORM TO THE SPECIFICATIONS AND STANDARD OF THE AMERICAN INSTITUTE OF STEEL CONSTRUCTION (AISC), AS CONTAINED IN THE 14TH EDITION OF "AISC MANUAL OF STEEL CONSTRUCTION".
2. ALL STRUCTURAL STEEL SHALL BE ERECTED PLUMB AND TRUE TO LINE. TEMPORARY BRACING SHALL BE INSTALLED AND SHALL BE LEFT IN PLACE UNTIL OTHER MEANS IS PROVIDED TO ADEQUATELY BRACE THE STRUCTURE.
3. PROVIDE THE FOLLOWING MATERIALS FOR STRUCTURAL STEEL UNO:

STRUCTURAL STEEL GRADES:		
A.	ALL WIDE FLANGE SECTIONS	ASTM A992
B.	SQUARE OR RECTANGULAR HOLLOW STRUCTURAL SECTIONS (HSS)	ASTM A500, GRADE B (F_y=46 KSI)
C.	ROUND HOLLOW STRUCTURAL SECTIONS (HSS)	ASTM A500, GRADE B (F_y=42 KSI)
D.	PIPES	ASTM A53 TYPE E OR S, GRADE B, (F_y=35 KSI)
E.	PLATES, ANGLES, CHANNELS & TEES	ASTM A36
F.	MOMENT FRAME BASE PLATES	ASTM 572, GRADE 50
G.	MACHINE BOLTS (MB)	ASTM A307
H.	HIGH STRENGTH BOLTS (HSB)	ASTM A325 TYPE N, A490
I.	WELDED HEADED STUDS	ASTM A108
J.	THREADED RODS FOR ANCHOR BOLTS	ASTM F1554, GRADE 36

4. 1/8" THICK PLATES AND THICKER SHALL BE GAS CUT OR SAW CUT EXCEPT AS OTHERWISE NOTED, ALL BOLTS SHALL BE HIGH STRENGTH BOLTS. EXCEPT OTHERWISE NOTED, ALL BOLT HOLES SHALL BE STANDARD HOLES.
5. ALL CONNECTIONS NOT SHOWN SHALL CONFORM TO THE "AISC MANUAL OF STEEL CONSTRUCTION" AND SHALL BE SUBMITTED ON SHOP DRAWINGS FOR REVIEW BY SEOR PRIOR TO FABRICATION.
6. ALL WELDED HEADED STUDS, THREADED STUDS, AND DEFORMED BARS SHALL BE NELSON, OR EQUIVALENT, AND WELDED (IN ACCORDANCE WITH MANUFACTURER'S RECOMMENDATIONS BY CERTIFIED WELDERS) SO AS TO FULLY DEVELOP THE TENSILE CAPACITY OF THE CONNECTOR.
7. BOLTS WITH UPSET THREADS ARE NOT ALLOWED. USE THE APPROPRIATE NUT AND WASHER TYPE FOR THE SPECIFIED BOLT.
8. ALL STEEL FABRICATION SHALL BE PERFORMED BY A LICENSED FABRICATOR.
9. ALL STRUCTURAL STEEL AND MISCELLANEOUS STEEL PERMANENTLY EXPOSED TO THE ELEMENTS SHALL BE HOT DIP GALVANIZED AFTER FABRICATION UNLESS A WEATHER PROOF COATING IS SPECIFIED BY THE ARCHITECT UNO. STAINLESS AND WEATHERING STEELS ARE EXCEPTED WHERE SPECIFIED.
10. SEE ARCHITECTURAL DRAWINGS FOR NAILER HOLES, WELDED STUDS OR OTHER ITEMS NOT SHOWN IN THESE DRAWINGS. WHERE STEEL IS EMBEDDED IN CONCRETE OR MASONRY, PROVIDE HOLES AS REQUIRED FOR PASSAGE OF CONTINUOUS REINFORCING BARS WHERE INDICATED ON DRAWINGS. DO NOT CUT HOLES IN STRUCTURAL STEEL WITHOUT PRIOR APPROVAL OF SEOR.
11. ALL ARCHITECTURALLY EXPOSED STRUCTURAL STEEL (AESS) SHALL COMPLY WITH AISC CODE OF STANDARD PRACTICE, SECTION 10.
12. PLACE NON-SHRINK OR DRYPACK GROUT UNDER ALL BASE PLATES AND ALLOW TO CURE BEFORE APPLYING LOADS.
13. ALL OPEN HSS ENDS SHALL BE CAPPED. MIN. 1/4" STL CAP.
14. COLUMN SPLICES ARE NOT ALLOWED.

WELDING NOTES:

1. WELDING PROCEDURES, ELECTRODES AND WELDER QUALIFICATIONS SHALL CONFORM TO THE "CODE FOR WELDING IN BUILDING CONSTRUCTION", AMERICAN WELDING SOCIETY (AWS), D1.1, D1.8 AND THE AISC "SPECIFICATIONS FOR THE DESIGN, FABRICATION AND ERECTION OF STRUCTURAL STEEL FOR BUILDINGS".
2. ALL WELDERS SHALL HAVE EVIDENCE OF PASSING THE AWS STANDARD QUALIFICATION TESTS, AND SHALL BE CERTIFIED FOR THE WORK THEY ARE PERFORMING.
3. PROJECT WELDING SHALL BE PERFORMED ONLY IN ACCORDANCE WITH WELDING PROCEDURE SPECIFICATIONS (WPS) SUBMITTED BY THE CONTRACTOR AND REVIEWED BY THE SEOR AND PROJECT WELDING INSPECTOR. THE WPS SHALL BE IN ACCORDANCE WITH AWS D1.1-D1.4 & D1.8 CURRENT EDITION.
4. WHERE WELDS ARE DESIGNATED AS DEMAND CRITICAL, THEY SHALL BE MADE WITH A FILLER METAL CAPABLE OF PROVIDING A MINIMUM CHARPY V-NOTCH (CVN) TOUGHNESS OF 20 FT-LB AT -20°F AND 40 FT-LB AT 70°F. SEE AISC 341-10 SECTION A3.4B FOR ADDITIONAL REQUIREMENTS.
5. ALL WELDS WITHIN MEMBERS DESIGNATED AS PART OF THE SEISMIC LOAD RESISTING SYSTEM (SLRS) SHALL CONFORM TO THE DETAILING, MATERIALS, WORKMANSHIP, TESTING, AND INSPECTION REQUIREMENTS PER AWS D1.8 AND MUST HAVE A MIN. CVN TOUGHNESS OF 20 FT-LB @ 0°F PER AISC 341 A3.45B.
6. WELDING OF STRUCTURAL STEEL SHALL BE PERFORMED PER AWS D1.1 & D1.8 USING E70XX ELECTRODES UNLESS OTHERWISED NOTED.
7. WELDING OF REINFORCING BARS SHALL BE PERFORMED PER AWS D1.4 USING E90XX ELECTRODES.
8. WELDING OF METAL DECK AND LIGHT GAGE STEEL SHALL BE IN ACCORDANCE WITH AWS D1.3.
9. ALL FULL PENETRATION WELDS SHALL BE ULTRA-SONIC TESTED PER AWS D1.1 & AISC 341 J6.2.
10. ALL GROOVE OR BUTT WELDS SHALL BE COMPLETE PENETRATION WELDS. ALL EXPOSED BUTT WELDS SHALL BE GROUND SMOOTH.
11. ALL EXPOSED WELDS ON ARCHITECTURALLY EXPOSED STRUCTURAL STEEL (AESS) SHALL COMPLY WITH AISC CODE OF STANDARD PRACTICE, SECTION 10.
12. FIELD WELDS HAVE BEEN INDICATED WHERE THEY ARE EXPECTED TO OCCUR. THE CONTRACTOR SHALL DETERMINE THE ACTUAL FIELD WELDING NECESSARY TO COMPLETE THE PROJECT AND INCLUDE ALL ASSOCIATED COSTS WITHIN THE BASE BID.

COLD-FORMED STEEL FRAMING NOTES:

1. DESIGN, FABRICATION AND ERECTION OF COLD-FORMED STEEL FRAMING SHALL CONFORM TO THE SPECIFICATIONS AND STANDARD OF THE AMERICAN IRON AND STEEL INSTITUTE (AISI), AS CONTAINED IN THE "SPECIFICATION FOR THE DESIGN OF COLD-FORMED STEEL STRUCTURAL MEMBERS", LATEST EDITION, INCLUDING ALL APPLICABLE AMENDMENTS.
2. ALL COLD-FORMED STEEL FRAMING SHALL BE ERECTED PLUMB AND TRUE TO LINE. TEMPORARY BRACING SHALL BE INSTALLED AND LEFT IN PLACE UNTIL OTHER MEANS IS PROVIDED TO ADEQUATELY BRACE THE STRUCTURE.
3. COLD-FORMED STEEL GRADES:
   A. 18 GA (43 MILS) OR THINNER ....ASTM A1003 GRADE 33 (FY = 33 KSI)
   B. 16 GA (54 MILS) AND THICKER ....ASTM A1003 GRADE 50 (FY = 50 KSI)
4. ALL COLD-FORMED STEEL FRAMING SHALL BE BRACED AS REQUIRED BY SECTION D3 OF THE AISI SPECIFICATION.
5. SUBMIT COLD-FORMED STEEL FRAMING SHOP DRAWINGS AND SPECIFICATIONS TO THE SEOR FOR REVIEW PRIOR TO FABRICATION.
6. COLD-FORMED STEEL STUDS AND TRACKS ARE TO BE ATTACHED WITH SHEET METAL SCREWS (SMS) WITH SIZES CALLED OUT ON THE DETAILS. PENETRATION OF SCREWS THROUGH JOINED MATERIAL SHOULD NOT BE LESS THAN 3 EXPOSED THREADS. SCREWS ARE TO BE INSTALLED AND TIGHTENED IN ACCORDANCE WITH SCREW MANUFACTURER'S RECOMMENDATIONS.
7. ALL HOLES FOR BOLTS SHOULD BE SHALL BE STANDARD HOLES.

MOMENT FRAME AND COMPLETE JOINT PENETRATION CONNECTION NOTES:

WELDING ELECTRODES
A. SMAW E7018*
B. FCAW E70 SERIES*

* WELD METAL SHALL BE CAPABLE OF DELIVERING A MINIMUM OF 20 FT-LBS AT -0°F AND 40FT-LBS @ 70°F AS MEASURED BY A CHARPY V-NOTCH IMPACT TEST PER AWS D1.1AND D1.8, APPENDIX III.

* BASE METAL FOR STRUCTURAL SHAPES IN SIZE GROUP 4 & 5 W/ $t_f \geq 1\frac{1}{2}$" SHALL BE CAPABLE OF DELIVERING A MINIMUM OF 20 FT-LBS AT 70°. F AS MEASURED BY A CHARPY V-NOTCH IMPACT TEST PER A.I.S.C. MANUAL OF STEEL CONSTRUCTION, LATEST EDITION.

STRUCTURAL STEEL
1. ALL WELDING SHALL BE IN ACCORDANCE WITH THE AMERICAN WELDING SOCIETY (AWS) STRUCTURAL WELDING CODE FOR STEEL AWS D1.1-10 AND D1.8.
2. WELDING PROCEDURE SPECIFICATIONS (WPS) SHALL BE SUBMITTED TO THE ENGINEER FOR APPROVAL, PRIOR THE ENGINEER FOR APPROVAL, PRIOR TO THE BEGINNING OF WELDING OPERATIONS. THE WPS SHALL INCLUDE THE WELDING PARAMETERS RECOMMENDED BY THE ELECTRODE MANUFACTURER. SEE AWS D1.1 APPENDIX E, FORM E-1. JOINT DETAILS TO SUIT EXISTING CONDITIONS. THE WELDING ELECTRODE MANUFACTURER'S SPECIFICATIONS SHALL BE ATTACHED TO THE WPS. ALL WELDERS AND INSPECTORS SHALL BE INFORMED OF THE WPS AND SHALL RETAIN A COPY.
3. SEE AWS FOR PREQUALIFIED SMAW WPS'S.
4. SEE AWS FOR PREQUALIFIED FCAW WPS'S.
5. WELDING TO BE DONE BY WELDERS CERTIFIED BY AWS.
6. ONLY SHIELDED METAL ARC WELDING (SMAW) WITH LOW HYDROGEN ELECTRODES OR FLUX CORE ARC WELDING (FCAW), EITHER GAS SHIELDED OF SELF SHIELDED, SHALL BE USED. FOR SMAW, THE TYPICAL REQUIREMENTS SHALL BE ACCORDING TO NOTE #3 ABOVE. WELDING PROCEDURES SHALL MEET THE REQUIREMENTS OF AWS D1.1 4.6.2, OR SHALL BE QUALIFIED BY TEST. FOR FCAW, THE TYPICAL REQUIREMENTS SHALL BE ACCORDING TO NOTE #4 ABOVE. THE WELDING PROCEDURE SHALL MEET THE REQUIREMENTS OF AWS D1.1 4.14.1.6.
7. INDIVIDUAL WELDS SHALL BE CARRIED CONTINUOUSLY TO COMPLETION BEFORE THE JOINT IS ALLOWED TO COOL BELOW THE MINIMUM SPECIFIED PREHEAT AND INTERPASS TEMPERATURE.
8. AT ALL COMPLETE PENETRATION WELDS, WELD BEADS SHALL BE PEENED AFTER EACH PASS, WITH THE EXCEPTION OF THE ROOT PASS AND THE SURFACES PASSES, AS FOLLOWS: TURN SLAG GUN 90 DEG. AND MAKE A MINIMUM OF 4 PASSES WITH DULL CHISEL.
9. PREHEATING IS REQUIRED ON ALL TACK WELDS NOT INCORPORATED INTO FINAL WELDS. SEE AWS D1.1, SECTION 3.3.7.
10. FOR BEAM FLANGE REINFORCEMENT PLATES, THE ROLLING DIRECTION OF GRAIN SHALL BE INDICATED ON THE PLATE AND INSTALLED SO THAT THE GRAIN DIRECTION IS PARALLEL TO THE LONGITUDINAL AXIS OF THE MEMBER.
11. FULL TIME VISUAL INSPECTION BY AN AWS QC-1 QUALIFIED INSPECTOR IS REQUIRED FOR ALL WELDING.
12. 100% ULTRASONIC WELD TESTING BY THE INSPECTOR IS REQUIRED FOR ALL COMPLETE PENETRATION WELDS.
13. AMPEREAGE, VOLTAGE, POLARITY AND ELECTRODE STICK OUT SHALL BE VERIFIED TO BE IN COMPLIANCE WITH THE ELECTRODE MANUFACTURER'S RECOMMENDATIONS.
14. REMOVE B.U. BARS AND WELD TABS AT ALL FLANGE COMPLETE JOINT PENETRATION (CJP) WELDS AT DUCTILE MOMENT FRAME CONNECTIONS. TYPICAL UNLESS NOTED OTHERWISE.

METAL DECK NOTES (FILLED & UNFILLED):

1. MATERIAL FOR METAL DECK SHALL HAVE A MIN YIELD STRENGTH OF 50 KSI AND CONFORM TO ASTM A653-SS GRADE 33 WITH GALVANIZED G60 COATING COMPLYING WITH ASTM A525.
2. SEE TYPICAL DETAILS FOR REINFORCING OF DECK AROUND OPENINGS. CONTRACTOR SHALL COORDINATE SIZE AND LOCATIONS OF OPENINGS WITH THE VARIOUS TRADES. NO LOADS SHALL BE HUNG FROM DECK WITHOUT APPROVAL OF SEOR.
3. FLOOR AND ROOF DECK IS DESIGNED FOR UNSHORED CONSTRUCTION, UNO. MAINTAIN 3 SPAN CONDITION WHEREVER POSSIBLE (2 SPAN MIN) EXCEPT AT STAIR LANDING AND WHERE NOTED OTHERWISE ON PLANS.
4. PROVIDE 2" MINIMUM BEARING AT ALL SUPPORTS. END LAPS OF METAL DECK SHALL BE A MINIMUM OF 2" AND SHALL OCCUR ONLY OVER SUPPORTS. DECK SHALL BE LAID OUT SO THAT A LOW FLUTE FALLS ON EACH PARALLEL SUPPORT.
5. INSTALL DECK BY WELDING. USE 3/4" DIAMETER PUDDLE WELDS OR WELDED STUDS TO SUPPORTS SPACED AS SHOWN ON CONSTRUCTION DRAWINGS. SPACING FOR TOP SEAM, SIDE SEAM, BUTTON PUNCH, OR PUNCHLOK CONNECTION SHALL BE IN ACCORDANCE WITH DRAWINGS. SEE TYPICAL METAL DECK DETAILS..
6. SUBMIT SHOP DRAWINGS FOR METAL DECK TO THE SEOR FOR REVIEW PRIOR TO FABRICATION. SHOP DRAWINGS SHALL SHOW TYPE OF DECK, LAYOUT OF DECK, THE SIZE AND LOCATION OF ANY OPENINGS OF WIDTH GREATER THAN 1'-0", AND ATTACHMENT METHOD.
7. ALTERNATES TO TYPE OF DECK AND FASTENING MAY BE USED WITH THE APPROVAL OF THE SEOR. DECK PROPERTIES SHALL BE EQUAL TO OR GREATER THAN THOSE SHOWN ON THE PLANS. ANY DECK OR METHOD OF FASTENING SHALL HAVE LATEST EVALUATION REPORT PER CURRENT CODE APPROVING THE DECK FOR THE APPLICATION.
8. METAL DECK WITH CONCRETE FILL SHALL HAVE POSITIVE VENTING. DO NOT EMBED PIPES, SLEEVES, CONDUIT, ETC IN CONCRETE TOPPING UNO.

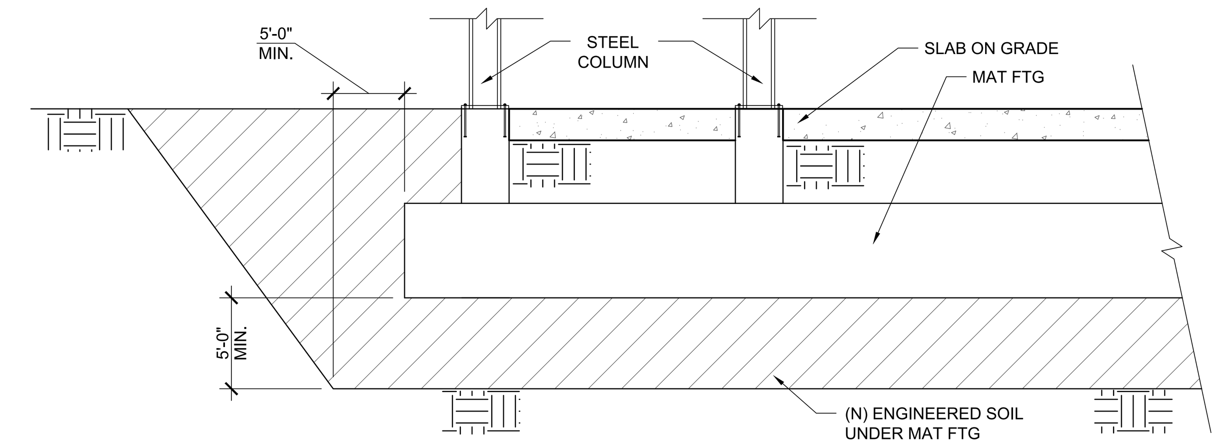

IDENTIFICATION STAMP
DIV. OF THE STATE ARCHITECT
APP. 03-119458 INC:
REVIEWED FOR
SS ☑ FLS ☑ ACS ☑
DATE:05/23/2019

DIVISION OF STATE ARCHITECT
355 South Grand Avenue, Suite 2100
Los Angeles, California. 90012
ph: (213) 897-3995 Fax: (213) 897-3159
agency

tBP architecture planning interiors
tBP/Architecture
4611 Teller Avenue
Newport Beach, CA 92660
ph: 949.673.0300 fx: 949.732.3895
architect

VCA ENGINEERS INC
CIVIL • STRUCTURAL
2151 Michelson Dr. #240
Irvine, CA 92612
Tel. 949.679.0870
Fax. 949.679.9370
Project No.: E358
REGISTERED PROFESSIONAL ENGINEER YOUNG-KEUN NAM No. S4029 Exp. 9/30/20 STRUCTURAL STATE OF CALIFORNIA
consultant

COMPTON COLLEGE
INSTRUCTIONAL BUILDING No. 2

COMPTON COMMUNITY COLLEGE DISTRICT
1111 E. ARTESIA BLVD. COMPTON, CA.
owner

tBP project number : 20998.00
file name:
drawn by: checked by:
date: 04/08/19

Rev: date: description:

THIS DRAWING AND THE DESIGNS, DEPICTIONS, IDEAS AND OTHER INFORMATION CONTAINED HEREIN CONSTITUTE UNPUBLISHED WORK OF tBP/ARCHITECTURE AND SHALL REMAIN THE PROPERTY OF tBP/ARCHITECTURE IN PERPETUITY. NO PART THEREOF SHALL BE REPRODUCED, DISCLOSED, DISTRIBUTED, SOLD, PUBLISHED OR OTHERWISE USED IN ANY WAY WITHOUT THE ADVANCED EXPRESS WRITTEN CONSENT OF tBP/ARCHITECTURE.

drawing title:
GENERAL NOTES

drawing no.:
S0-0.1
drawing of

POST INSTALLED ANCHORS (DSA):

1. ANCHOR DIAMETER REFERS TO THE THREAD SIZE FOR THE WEDGE & SHELL CATEGORIES AND TO THE ANCHOR OUTSIDE DIAMETER FOR THE SLEEVE CATEGORY.
2. APPLY PROOF TEST LOADS TO WEDGE & SLEEVE ANCHORS WITHOUT REMOVING THE NUT IF POSSIBLE. IF NOT, REMOVE NUT & INSTALL A THREADED COUPLER TO THE SAME TIGHTNESS OF THE ORIGINAL NUT USING A TORQUE WRENCH & APPLY LOAD.
3. FOR SLEEVE/SHELL INTERNALLY THREADED CATEGORIES, VERIFY THAT THE ANCHOR IS NOT PREVENTED FROM WITHDRAWING BY A BASEPLATE OR OTHER FIXTURES. IF RESTRAINT IS FOUND, LOOSEN AND SHIM OR REMOVE FIXTURE(S) PRIOR TO TESTING.
4. REACTION LOADS FROM TEST FIXTURES MAY BE APPLIED CLOSE TO THE ANCHOR BEING TESTED, PROVIDED THE ANCHOR IS NOT RESTRAINED FROM WITHDRAWING BY THE FIXTURE(S).
5. SHELL TYPE ANCHORS MUST BE TESTED AS FOLLOWS:
   VISUALLY INSPECT 25% FOR FULL EXPANSION AS EVIDENCED BY THE LOCATION OF THE EXPANSION PLUG IN THE ANCHOR BODY. PLUG LOCATION OF A FULLY EXPANDED ANCHOR SHOULD BE AS RECOMMENDED BY THE MANUFACTURER, OR, IN THE ABSENCE OF SUCH RECOMMENDATION, AS DETERMINED ON THE JOB SITE FOLLOWING THE MANUFACTURER'S INSTALLATION INSTRUCTIONS, AND; PROOF LOAD 5% AS INDICATED IN THE TABLE ABOVE, BUT NOT LESS THAN THREE ANCHORS PER DAY FOR EACH DIFFERENT PERSON OR CREW INSTALLING ANCHORS, OR; TEST 50% OF THE INSTALLED ANCHORS PER 2624(d).
6. TEST EQUIPMENT IS TO BE CALIBATED BY AN APPROVED TESTING LABORATORY IN ACCORDANCE WITH STANDARD RECOGNIZED PROCEDURES.
7. TORQUE TEST VALUES FOR SHELL TYPE ANCHORS ARE OMMITTED DUE TO LACK OF DATA, TORQUE TESTING CAN OCCUR ON AN INDIVIDUAL BASIS WHEN TEST PROCEDURES ARE SUBMITTED AND APPROVED BY THE ENFORCEMENT AGENCY. TABULATED VALUES MAY BE FORTHCOMING ONCE THE ENFORCEMENT AGENCY HAS MORE DATA TO EVALUATE THE FEASIBILITY OF STANDARD TORQUE VALUES.
8. THE FOLLOWING CRITERIA APPLY FOR THE ACCEPTANCE OF INSTALLED ANCHORS:
   A. HYDRAULIC RAM METHOD: THE ANCHOR SHOULD HAVE NO OBSERVABLE MOVEMENT AT THE APPLCABLE TEST LOAD. FOR WEDGE AND SLEEVE TYPE ANCHORS, A PRACTICAL WAY TO DETERMINE OBSERVABLE MOVEMENT IS THAT THE WASHER UNDER THE NUT BECOMES LOOSE.
   B. TORQUE WRENCH METHOD: THE APPLICABLE TEST TORQUE MUST BE REACHED WITHIN THE FOLLOWING LIMITS:
      WEDGE OR SLEEVE TYPE: ONE-HALF (1/2) TURN OF THE NUT.
      3/8 IN. SLEEVE ANCHOR ONLY: ONE-QUARTER (1/4) TURN OF THE NUT.
9. TESTING SHOULD OCCUR 24 HOURS MINIMUM AFTER INSTALLATION OF THE SUBJECT ANCHORS.
10. WHEN INSTALLING DRILLED-IN ANCHORS AND/OR POWDER DRIVEN PINS IN EXISTING NON-PRESTRESSED REINFORCED CONCRETE, USE CARE AND CAUTION TO AVOID CUTTING OR DAMAGING THE EXISTING REINFORCING BARS. WHEN INSTALLING THEM INTO EXISTING PRESTRESSED CONCRETE (PRE- OR POST-TENSIONED) LOCATE THE PRESTRESSED TENDONS BY USING A NON-DESTRUCTIVE METHOD PRIOR TO INSTALLATION. EXERCISE EXTREME CARE AND CAUTION TO AVOID CUTTING OR DAMAGING THE TENDONS DURING INSTALLATION. MAINTAIN A MINIMUM CLEARANCE OF ONE INCH BETWEEN THE REINFORCEMENT AND THE DRILLED-IN ANCHOR AND/OR PIN.
11. ALL TESTS SHALL BE PERFORMED IN ACCORDANCE W/ CBC 1910.A5. W/ THE PRESENCE OF THE SPECIAL INSPECTOR/INSPECTOR OF RECORD.
12. TEST LOADS:

EPOXY ANCHORS:

EPOXY ANCHORS IN NORMAL WEIGHT CONCRETE(3000PSI MIN)		
THREADED ROD DIAMETER (IN)	EMBEDMENT (IN)	TENSION TEST VALUE (LBS) SIMPSON SET-XP (ICC-ESR-2508)
⅜	3	3650
½	4	5540
⅝	5	7440
¾	6	9520
⅞	7	9550
1	8	13830
1 ¼	10	21610
* LISTED EPOXY ADHESIVE MAY NOT BE USED WITH NOTED ROD SIZES		

EPOXY ANCHORS IN NORMAL-WEIGHT CONCRETE (3000 PSI MIN)		
REBAR SIZE	EMBEDMENT (IN)	TENSION TEST VALUE (LBS) SIMPSON SET-XP
#3	3	*
#4	4	5790
#5	5	6250
#6	6	8450
#7	7	11070
#8	8	17050
#9	9	*
#10	10	*
* LISTED EPOXY ADHESIVE MAY NOT BE USED WITH NOTED ROD SIZES		

1. TESTING OF EPOXY DOWELS AT JOINTS BETWEEN NEW AND EXISTING SLABS-ON-GRADE IS NOT REQUIRED
2. TESTING OF #3 EPOXY DOWELS AT CURBS AND HOUSEKEEPING PADS IS NOT REQUIRED.

SCREW ANCHOR: SIMPSON TITEN HD (ICC-ESR-2713)

SIMPSON TITEN HD IN NORMAL WEIGHT CONCRETE (3000PSI MIN)		
ANCHOR DIAMETER (IN)	NOMINAL EMBEDMENT (IN)	TENSION TEST VALUE (LBS)
⅜	2 ½	1200
½	3 ¼	2973
¾	5 ½	5895

EXPANSION ANCHOR IN MASONRY: HILTI KWIK-BOLT 3 (ICC-ESR-1385)

HILTI KWIK-BOLT 3 IN MASONRY		
ANCHOR DIAMETER (IN)	H (IN)	TORQUE TEST VALUE (FT-LBS)
⅜	2⅜	15
½	3 ⅛	25
⅝	4	65
¾	4⅝	120

1. H IS MEASURED FROM FACE OF CONCRETE SUBSTRATE TO THE END OF THE BOLT.
2. CONTRACTOR SHALL PROVIDE ANCHORS WITH SUFFICIENT TOTAL LENGTH FOR THE SPECIFIED EMBEDMENT LENGTH, THICKNESS OF FASTENED PART, WASHER, AND NUT.

EXPANSION ANCHOR IN CONCRETE: HILTI KWIK-BOLT TZ (ICC-ESR-1917)

HILTI KWIK BOLT TZ IN NORMAL-WEIGHT CONCRETE			
ANCHOR DIAMETER (IN)	Hef (IN)	MINIMUM HOLE DEPTH (IN)	TORQUE TEST VALUE (FT-LBS)
⅜	2	2⅝	25
½	2	2⅝	40
⅝	4	4¼	60
¾	4¾	5¼	110

HILTI KWIK BOLT TZ IN LIGHTWEIGHT CONCRETE			
ANCHOR DIAMETER (IN)	Hef (IN)	MINIMUM HOLE DEPTH (IN)	TORQUE TEST VALUE (FT-LBS)
⅜	2	2⅝	25
½	2	2⅝	40
⅝	3⅜	3⅞	60

1. Hef IS MEASURED FROM FACE OF CONCRETE SUBSTRATE TO THE TEETH END OF THE EXPANSION ELEMENT.
2. CONTRACTOR SHALL PROVIDE ANCHORS WITH SUFFICIENT TOTAL LENGTH FOR THE SPECIFIED EMBEDMENT LENGTH, THICKNESS OF FASTENED PART, WASHER, AND NUT.

POWDER-ACTUATED FASTENER (PAF):

1. PODER-ACTUATED FASTENERS SHALL BE ONE OF THE FOLLOWING, UON:

   HILTI X-U (ICC-ESR 2269) AT METAL.
   HILTI X-CP72(ICC-ESR 2379) AT PTDF.
2. PROVIDE 0.08" THK X 1.1" SQUARE OR 1.425" ROUND WASHERS FOR ALL PODER-ACTUATED FASTENERS.
3. FASTENER DIAMETER AND EMBEDMENT SHALL BE AS SPECIFICALLY DETAILED ELSEWHERE IN THE DRAWINGS.
4. TESTING IS NOT REQUIRED FOR POWER-ACTUATED FASTENERS USED TO ATTACH TRACKS/SILL OF INTERIOR NON-SHEAR WALL PARTITIONS FOR SHEAR ONLY, WHERE THERE ARE AT LEASE THREE FASTENERS PER SEGMENT OF TRACK/SILL

STRUCTURAL OBSERVATIONS:

1. VISUAL OBSERVATIONS WILL BE PERFORMED AT THE DISCRETION OF THE OWNER, ARCHITECT, SEOR, AND AS REQUIRED BY THE BUILDING OFFICIAL IN ACCORDANCE WITH THE BUILDING CODE.
2. IT IS THE RESPONSIBILITY OF THE GENERAL CONTRACTOR TO NOTIFY THE STRUCTURAL ENGINEER AS TO WHEN EACH MAJOR PHASE OF CONSTRUCTION IS READY FOR OBSERVATION A MINIMUM OF FIVE (5) WORKING DAYS IN ADVANCE.
3. THE FOLLOWING MAJOR PHASES OF CONSTRUCTION REQUIRE A SITE VISIT AND STRUCTURAL OBSERVATION REPORT FROM THE SEOR:
   - FOUNDATION REBAR AND ANCHORS - PRIOR TO POUR OF CONCRETE
   - STRUCTURAL FRAMING - AFTER ERECTION AND PRIOR TO CLOSING IN
   - RAISED FLOOR SLABS AND REBAR - PRIOR TO POUR OF CONCRETE
   - COMPLETION OF THE STRUCTURAL SYSTEM
4. THE CONTRACTOR SHALL BE RESPONSIBLE FOR ENSURING THAT NAILING, REINFORCEMENT, WELDS, CONNECTIONS, ETC. ARE VISIBLE FOR OBSERVATION WHEN THE SEOR IS ON SITE AND FOR ANY SCHEDULING DELAYS DUE TO NONCOMPLIANT ITEMS FOUND DURING THE OBSERVATION.

CONTRACTOR RESPONSIBILITY NOTE: (DSA)

1. EACH CONTRACTOR RESPONSIBLE FOR THE CONSTRUCTION OF A MAIN LATERAL-FORCE-RESISTING SYSTEM, DESIGNATED ON PLANS SHALL SUBMIT A WRITTEN STATEMENT OF RESPONSIBILITY TO DSA AND THE OWNER PRIOR TO THE COMMENCEMENT OF WORK ON THE SYSTEM OR COMPONENT. THE CONTRACTOR'S STATEMENT OF RESPONSIBILITY SHALL CONTAIN THE FOLLOWING:
   A. ACKNOWLEDGMENT OF AWARENESS OF THE SPECIAL REQUIREMENTS.
   B. ACKNOWLEDGMENT THAT CONTROL WILL BE EXERCISED TO OBTAIN CONFORMANCE WITH THE CONSTRUCTION DOCUMENTS APPROVED BY DSA.
   C. PROCEDURES FOR EXERCISING CONTROL WITHIN THE CONTRACTOR'S ORGANIZATION, THE METHOD AND FREQUENCY OF REPORTING AND THE DISTRIBUTION OF THE REPORTS.
   D. IDENTIFICATION AND QUALIFICATIONS OF THE PERSON(S) EXERCISING SUCH CONTROL AND THEIR POSITION(S) IN THE ORGANIZATION.

STATEMENT OF SPECIAL INSPECTIONS:

1. THE OWNER SHALL EMPLOY ONE OR MORE SPECIAL INSPECTORS TO PROVIDE INSPECTIONS DURING CONSTRUCTION. THE SPECIAL INSPECTOR SHALL BE A QUALIFIED PERSON WHO SHALL DEMONSTRATE COMPETENCE, TO THE SATISFACTION OF THE BUILDING OFFICIAL, FOR INSPECTION OF THE PARTICULAR TYPE OF CONSTRUCTION OR OPERATION REQUIRING SPECIAL INSPECTION.
2. SPECIAL INSPECTIONS ARE NOT REQUIRED WHERE THE WORK IS DONE ON THE PREMISES OF A FABRICATOR REGISTERED AND APPROVED TO PERFORM SUCH WORK WITHOUT SPECIAL INSPECTION. APPROVED FABRICATORS MUST SUBMIT A CERTIFICATE OF COMPLIANCE FOR OFFSITE FABRICATIONS SUCH AS STRUCTURAL STEEL, PRECAST CONCRETE, GLUED LAMINATED TIMBER, ETC.
3. ALL INSPECTIONS SHALL BE PERFORMED BY INDEPENDENT SPECIAL INSPECTORS. JOB SITE VISITS BY THE STRUCTURAL ENGINEER OR PROJECT INSPECTOR DO NOT CONSTITUTE AND ARE NOT A SUBSTITUTE FOR INSPECTIONS BY A SPECIAL INSPECTOR.
4. ALL INSPECTION REPORTS SHALL BE SUBMITTED TO DSA AND SEOR. THE FINAL REPORTS BY THE SPECIAL INSPECTOR(S) MUST CERTIFY THAT THE ENTIRE STRUCTURAL SYSTEM COMPLIES WITH THE APPROVED PLANS AND SPECIFICATIONS.
5. IT IS SOLELY THE CONTRACTOR'S RESPONSIBILITY TO SEE THAT THESE INSPECTIONS ARE PERFORMED.
6. WORK REQUIRING SPECIAL INSPECTION SHALL BE INSPECTED BY THE SPECIAL INSPECTOR WHO IS PRESENT IN THE AREA WHERE THE WORK IS PERFORMED AND AT THE COMPLETION OF WORK. CONTINUOUS INSPECTION CONSISTS OF FULL-TIME INSPECTION; PERIODIC INSPECTION CONSISTS OF PART-TIME OR INTERMITTENT INSPECTION.
7. THE FOLLOWING SPECIAL INSPECTIONS ARE IN ADDITION TO INSPECTIONS BY THE PROJECT INSPECTOR. THIS LIST IS NOT INTENDED TO BE ALL INCLUSIVE.
8. REFER TO DSA 103 SPECIAL INSPECTION FORM FOR ALL TEST AND INSPECTION REQUIRED, AS WELL AS CALIFORNIA BUILDING CODE CHAPTER 17A.

TYPICAL ABBREVIATIONS

AB	ANCHOR BOLT	INT	INTERIOR
ABV	ABOVE	JST	JOIST
ADDT'L	ADDITIONAL	KLF	KIPS PER LINEAR FOOT
ADJ	ADJACENT	KSL	KIPS PER SQUARE FOOT
AFF	ABOVE FINISH FLOOR	KSI	KIPS PER SQUARE INCH
ALT	ALTERNATE	L	ANGLE
ARCH	ARCHITECT(URAL)	LFRS	LATERAL FORCE RESISTING SYSTEM
BLDG	BUILDING	LLH	LONG LEG HORIZONTAL
BLKG	BLOCKING	LLV	LONG LEG VERTICAL
BLW	BELOW	LP	LOW POINT
BM	BEAM	LWC	LIGHTWEIGHT CONCRETE
BN	BOUNDARY NAILING	MAX	MAXIMUM
B.O. BOTT	BOTTOM OF BOTTOM	MB	MACHINE BOLT
BRG	BEARING	MECH	MECHANICAL
BS	BOTH SIDES	MFR	MANUFACTURER
BTWN	BETWEEN	MIN	MINIMUM
C	CAMBER	MTL	METAL
CIP	CAST IN PLACE	(N)	NEW
CJ	CONTROL/ CONSTRUCTION JOINT	NS	NEAR SIDE OR NON-SHRINK
CL	CENTERLINE	NTS	NOT TO SCALE
CLR	CLEAR	NWC	NORMAL WEIGHT CONCRETE
CMU	CONCRETE MASONRY UNIT	OC	ON CENTER
COL	COLUMN	O.F.	OUTSIDE FACE
CONC	CONCRETE	OH	OPPOSITE HAND
CONN	CONNECTION	OPNG	OPENING
CONT	CONTINUOUS	PDF	POWDER DRIVEN FASTENER
CP	COMPLETE PENETRATION	PJ	PANEL JOIST
CSK	COUNTERSINK	PL	PLATE
CTR(D)	CENTER(ED)	PLC(S)	PLACE(S)
D_B	BAR OR BOLT DIAMETER	PLF	POUND PER LINEAR FOOT
DC	DEMAND CRITICAL	PLYWD	PLYWOOD
DBL	DOUBLE	PREFAB	PREFABRICATED
DEMO	DEMOLITION	PSF	POUND PER SQUARE FOOT
DET	DETAIL	PSI	POUND PER SQUARE INCH
DIA	DIAMETER	PT	PRESSURE TREATED OR POST TENSION
DIAG	DIAGONAL	QTY	QUANTITY
DIM	DIMENSION	RAD, R	RADIUS
DO	DITTO	REF	REFERENCE
DWG	DRAWING	REINF	REINFORCING
(E)	EXISTING	REQD	REQUIRED
EA	EACH	SB	SILL BOLT
EF	EACH FACE	SC	SAW CUT OR SLIP CRITICAL
EJ	EXPANSION JOIST	SCHED	SCHEDULE
EMBED	EMBEDMENT	SEOR	STRUCTURAL ENGINEER ON RECORD
ELEC	ELECTRICAL	SHTG	SHEATHING
ELEV	ELEVATION	SIM	SIMILAR
EN	EDGE NAILING	SLRS	SEISMIC LOAD RESISTING SYSTEM
E.O.	EDGE OF	SMS	SHEET METAL SCREW
EOR	ENGINEER OF RECORD	SN	SILL NAIL
EQ	EQUAL	SOG	SLAB ON GRADE
EQUIP	EQUIPMENT	SQ	SQUARE
ES	EACH SIDE OR EDGE	SS	STAINLESS STEEL
EW	EACH WAY	STD	STANDARD
EXP	EXPANSION	STGRD	STAGGERED
EXT	EXTERIOR	STIFF	STIFFENER
FIN	FINISH	STL	STEEL
FLR	FLOOR	STRUCT	STRUCTURAL
FN	FIELD NAILING	T&B	TOP AND BOTTOM
FND	FOUNDATION	THK	THICK
F.O.	FACE OF	T.O.	TOP OF
FS	FAR SIDE OR FIELD SCREW	TOM	TOP OF MASONRY
FRMG	FRAMING	TOS	TOP OF STEEL
FT	FOOT OR FEET	TYP	TYPICAL
FTG	FOOTING	UNO	UNLESS NOTED OTHERWISE
G	GIRDER	VERT	VERTICAL
GA	GAGE	W/	WITH
GALV	GALVANIZED	W/O	WITHOUT
HAB	HEADED ANCHOR BOLT	WF	WIDE FLANGE
HD	HOLDDOWN	WLD	WELDED
HDR	HEADER	WO	WHERE OCCURS
HGR	HANGER	WP	WORK POINT
HK	HOOK	WT	WEIGHT
HORIZ	HORIZONTAL	WWF	WELDED WIRE FABRIC
HP	HIGH POINT		
HS	HIGH STRENGTH		
HSS	HOLLOW STRUCTURAL STEEL		
HT	HEIGHT		
IN	INCH		

Ø = DIAMETER ℄ = REFERENCE ELEVATION OR WORK POINT

IDENTIFICATION STAMP
DIV. OF THE STATE ARCHITECT
APP. 03-119458 INC:
REVIEWED FOR
SS ☑ FLS ☑ ACS ☑
DATE:05/23/2019

DIVISION OF STATE ARCHITECT
355 South Grand Avenue, Suite 2100
Los Angeles, California. 90012
ph: (213) 897-3995 Fax: (213) 897-3159
agency

tBP architecture planning interiors
tBP/Architecture
4611 Teller Avenue
Newport Beach, CA 92660
ph: 949.673.0300 fx: 949.732.3895
architect

VCA ENGINEERS INC
2151 Michelson Dr. #240
Irvine, CA 92612
Tel. 949.679.0870
Fax. 949.679.9370
Project No.: E358
No. S4029 Exp. 9/30/20 STRUCTURAL ENGINEER STATE OF CALIFORNIA
consultant

COMPTON COLLEGE
INSTRUCTIONAL BUILDING No. 2
COMPTON COMMUNITY COLLEGE DISTRICT
1111 E. ARTESIA BLVD. COMPTON, CA.
owner

tBP project number : 20998.00
file name:
drawn by: checked by:
date: 04/08/19

Rev:	date:	description:

THIS DRAWING AND THE DESIGNS, DEPICTIONS, IDEAS AND OTHER INFORMATION CONTAINED HEREIN CONSTITUTE UNPUBLISHED WORK BY tBP/ARCHITECTURE AND SHALL REMAIN THE PROPERTY OF tBP/ARCHITECTURE IN PERPETUITY. NO PART THEREOF SHALL BE REPRODUCED, DISCLOSED, DISTRIBUTED, SOLD, PUBLISHED OR OTHERWISE USED IN ANY WAY WITHOUT THE ADVANCED EXPRESS WRITTEN CONSENT OF tBP/ARCHITECTURE.

drawing title:
GENERAL NOTES

drawing no.:
S0-0.2
drawing of

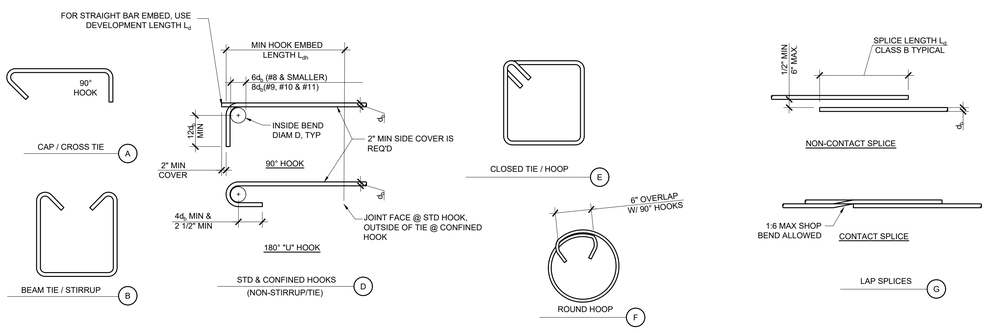

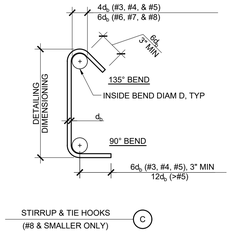

BAR SIZE	FINISHED BEND DIAMETER "D" IN INCHES
#3	2 1/4"
#4	3"
#5	3 3/4"
#6	4 1/2"
#7	5 1/4"
#8	6"
#9	9 1/2"
#10	10 3/4"
#11	12"
#14	18 1/4"
#18	24"

STANDARD HOOKS

	BAR SIZE	L_{dh} (in) STD HOOK	LAP SPLICE (in) CLASS B		L_d (in) DEVELOPMENT LENGTH	
			TOP	OTHER	TOP	OTHER
3000 PSI NWC	#3	6	29	23	22	17
	#4	8	38	29	29	22
	#5	10	47	37	36	28
	#6	12	56	43	43	33
	#7	14	82	63	63	48
	#8	16	94	72	72	55
	#9	18	106	81	81	62
	#10	20	119	91	91	70
	#11	22	132	102	101	78
4000 PSI NWC	#3	6	25	20	19	15
	#4	7	33	25	25	19
	#5	9	41	32	31	24
	#6	10	49	38	37	29
	#7	12	71	55	54	42
	#8	14	81	63	62	48
	#9	15	91	71	70	54
	#10	17	103	80	79	61
	#11	19	114	88	87	67
5000 PSI NWC	#3	6	23	17	17	13
	#4	6	30	23	23	17
	#5	8	37	29	28	22
	#6	9	45	34	34	26
	#7	11	64	50	49	38
	#8	12	73	56	56	43
	#9	14	82	63	63	48
	#10	16	93	71	71	54
	#11	17	102	78	78	60

NOTES:
1. L_{dh} - HOOK DEVELOPMENT LENGTH.
2. L_d - DEVELOPMENT LENGTH.
3. SEE BUILDING CODE AND ACI 318-14 VERSION FOR ALL REQUIREMENTS NOT NOTED.
4. FOR LIGHTWEIGHT CONCRETE MULTIPLY L_{dh} AND L_d VALUES SHOWN BY 1.3.
5. "TOP" BARS ARE HORIZONTAL WITH MORE THAN 12" OF FRESH CONCRETE CAST BELOW BARS. ALL OTHER BARS ARE "OTHER" BARS.
6. STD HOOK L_{dh} DOES NOT ACCOUNT FOR THE EFFECT OF TIES. CONFINED HOOK L_{dh} MAY BE USED WHERE ACI 318-14 25.4.3.1 APPLIES.
7. VALUES SHOWN ABOVE ARE FOR GRADE 60 (FY=60 KSI) REINFORCEMENT.
8. SPLICE LENGTHS SHOWN ARE FOR CLEAR SPACING NOT LESS THAN $2d_b$. CONCRETE COVER NOT LESS THAN d_b.
9. FOR EPOXY-COATED REINFORCEMENT, SEE BUILDING CODE

5 TYPICAL REINFORCEMENT DETAILS AND DEVELOPMENT LENGTHS
1" = 1'-0"

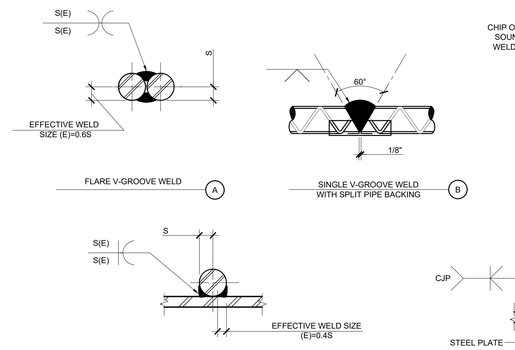

WELD SCHEDULE	
BAR SIZE	MIN WELD LENGTH
#3	3"
#4	3"
#5	3"
#6	4"
#7	5"
#8	5"
#9	6"
#10	6"

NOTES:
1. WELDING SHALL BE WITH LOW HYDROGEN ELECTRODES E90XX AND SHALL CONFORM TO AWS-D1.4.
2. ALL WELDING SHALL BE SUBJECT TO CONTINUOUS INSPECTION.
3. REINFORCING BARS TO BE WELDED SHALL MEET THE REQUIREMENT OF ASTM A706.
4. RADIUS OF REINFORCING BAR = S.
5. THESE ARE SECTIONAL VIEWS. BAR DEFORMATIONS ARE SHOWN ONLY FOR ILLUSTRATIVE PURPOSES.

3 TYPICAL REINFORCING BAR WELDING
NTS

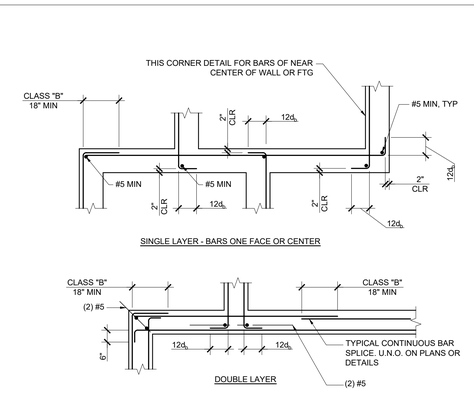

7 REINF BAR SPLICES AT CONT WALL FTGS INTERSECTIONS
NTS

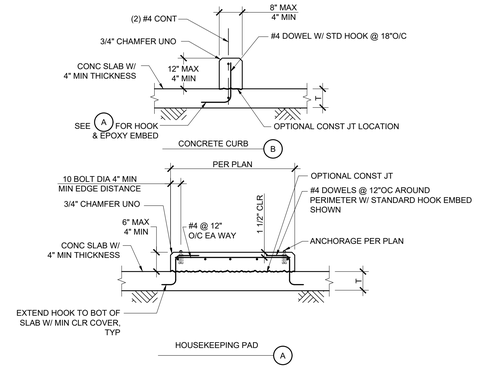

8 TYPICAL CONCRETE PAD AND CURB @ ON GRADE
NTS

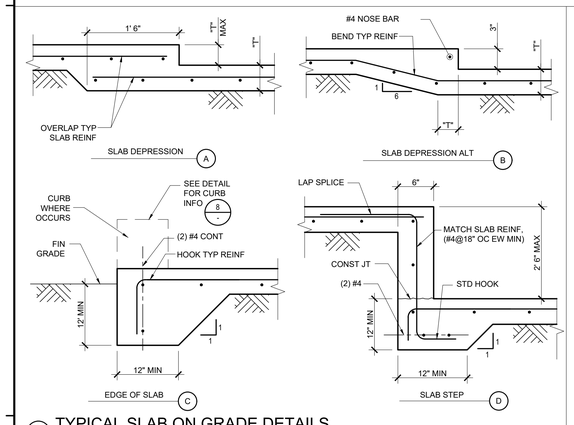

9 TYPICAL SLAB ON GRADE DETAILS
NTS

10 DETAIL
NTS

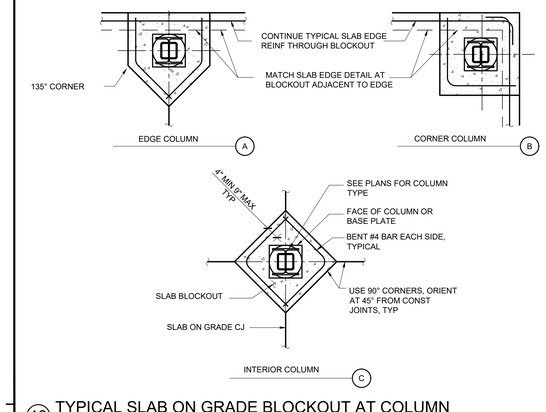

13 TYPICAL SLAB ON GRADE BLOCKOUT AT COLUMN
NTS

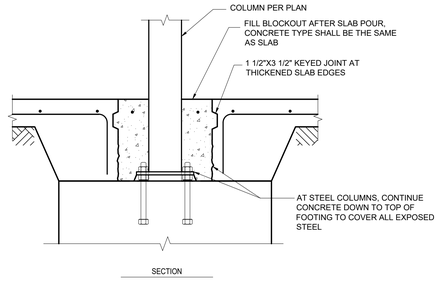

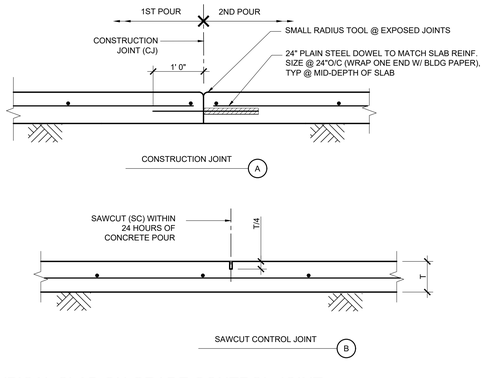

15 TYPICAL SLAB ON GRADE CONTROL JOINT (FOR SLAB THICKNESS 4" TO 6")
NTS

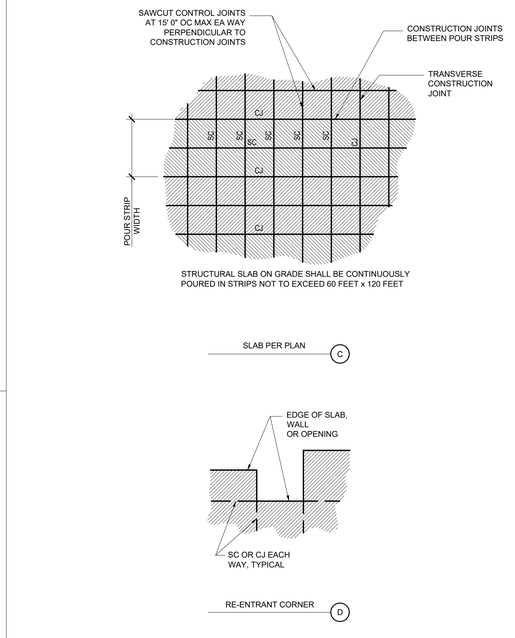

NOTES:
1. SEE ARCHITECTURAL PLANS FOR LOCATIONS OF VISUALLY EXPOSED CONTROL JOINTS.
2. FOR POURING SEQUENCE OTHER THAN THAT SHOWN ON THESE PLANS, SUBMIT SHOP DRAWINGS TO SEOR FOR REVIEW 7 DAYS PRIOR TO POUR.
3. SEE DETAIL 15 FOR SC AND CJ DETAIL.

16 TYPICAL SLAB ON GRADE CONTROL JOINT
NTS

IDENTIFICATION STAMP
DIV. OF THE STATE ARCHITECT
APP. 03-119458 INC:
REVIEWED FOR
SS ☑ FLS ☑ ACS ☑
DATE:05/23/2019

DIVISION OF STATE ARCHITECT
355 South Grand Avenue, Suite 2100
Los Angeles, California. 90012
ph: (213) 897-3995 Fax: (213) 897-3159
agency

tBP architecture planning interiors
tBP/Architecture
4611 Teller Avenue
Newport Beach, CA 92660
ph: 949.673.0300 fx: 949.732.3895
architect

VCA ENGINEERS INC
CIVIL • STRUCTURAL
2151 Michelson Dr. #240
Irvine, CA 92612
Tel. 949.679.0870
Fax. 949.679.9370
Project No.: E358
REGISTERED PROFESSIONAL ENGINEER
No. S4029
Exp. 9/30/20
STATE OF CALIFORNIA
consultant

COMPTON COLLEGE
INSTRUCTIONAL BUILDING No. 2
COMPTON COMMUNITY COLLEGE DISTRICT
1111 E. ARTESIA BLVD. COMPTON, CA.
owner

tBP project number : 20998.00
file name:
drawn by: checked by:
date: 04/08/19

Rev:	date:	description:

THIS DRAWING AND THE DESIGNS, DEPICTIONS, IDEAS AND OTHER INFORMATION CONTAINED HEREIN CONSTITUTE UNPUBLISHED WORK OF tBP/ARCHITECTURE AND SHALL REMAIN THE PROPERTY OF tBP/ARCHITECTURE IN PERPETUITY. NO PART THEREOF SHALL BE REPRODUCED, DISCLOSED, DISTRIBUTED, SOLD, PUBLISHED OR OTHERWISE USED IN ANY WAY WITHOUT THE ADVANCED EXPRESS WRITTEN CONSENT OF tBP/ARCHITECTURE.

drawing title:
TYPICAL DETAILS

drawing no.:
S0-1.1
drawing of

1 DETAIL
NTS

2 FOOTING POURED AGAINST EARTH
NTS

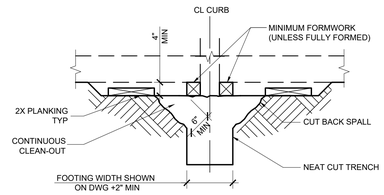

NOTES:
1. FOOTINGS POURED AGAINST EARTH ARE SUBJECT TO APPROVAL OF GEOTECH. ENGR.
2. FOOTING WIDTHS SHALL NOT BE MORE THAN 4" WIDER THAN SHOWN ON PLAN.
3. FORMWORK NOT PERMITTED BELOW GRADE UNLESS FULLY FORMED.
4. FOUNDATION CONCRETE MAY BE PLACED DIRECTLY INTO NEAT EXCAVATIONS PROVIDED THE FOUNDATION TRENCH WALLS ARE STABLE AS DETERMINED BY THE GEOTECHNICAL ENGINEER. THE MINIMUM FORMWORK SHOWN ON THE DRAWINGS IS MANDATORY TO ENSURE CLEAN EXCAVATIONS IMMEDIATELY PRIOR TO AND DURING THE PLACING OF CONCRETE.
5. CONT CLEAN-OUT STAKES NOT PERMITTED IN THE FTG AREA.
6. AFTER CONCRETE HAS SET, REMOVE LAITANCE AND SCUM.

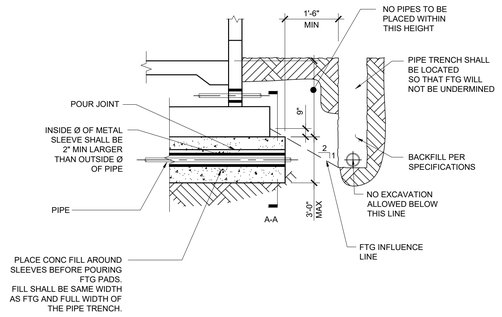

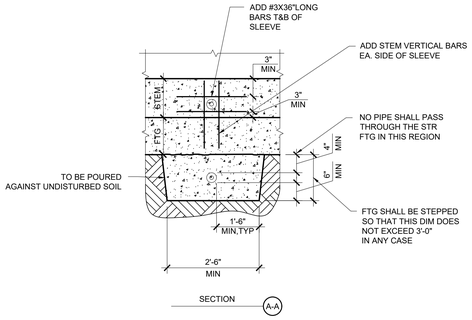

NOTES:
1. CONTRACTOR SHALL COORDINATE ALL PIPE LOCATIONS WITH BUILDING FOUNDATION REQUIREMENTS.
2. IF REQUIREMENTS AS SHOWN CANNOT BE MET, STEP FOOTING PER TYPICAL 'STEPPED FOOTING' DETAIL.
3. REFERENCE CBC SECTION 1805A.4.7

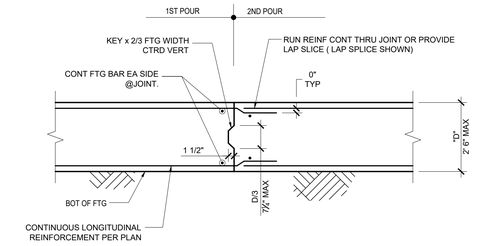

NOTES:
1. PROVIDE ADEQUATE SUPPORT FOR LONGITUDINAL REINF WITHIN 6" OF JT USING FTG TIES, VERT DOWELS OR OTHER MEANS.
2. SECTIONS SHOWN ARE AT CENTER OF FTG IN LONGITUDINAL DIRECTION.

4 CONSTRUCTION JOINT AT MAT FOOTING
NTS

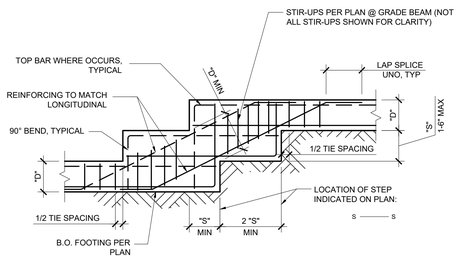

NOTES:
1. FOR FTG REINFORCING SEE PLANS AND DETAILS.
2. VERTICAL WALL DOWELS SHALL EXTEND TO BOTTOM OF FOOTING.
3. TRANSVERSE STEEL NOT SHOWN FOR CLARITY.
4. TWO STEPS ARE SHOWN, DETAIL FOR SINGLE STEP OR ADDITIONAL STEPS IS SIMILAR.

5 TYPICAL STEPPED FOOTING/GRADE BEAM
NTS

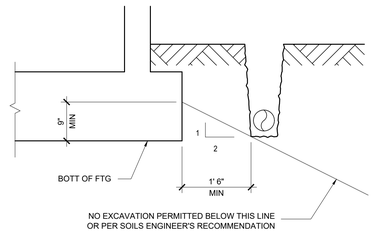

NOTE:
THE CONTRACTOR SHALL BE RESPONSIBLE FOR SHORING OR OTHERWISE MAINTAINING THE SIDES OF THE EXCAVATION FROM CAVE-INS UNTIL ALL BACKFILL IS COMPLETED PER SPECIFICATIONS AND GEOTECHNICAL REPORT.

6 TYPICAL EXCAVATION PARALLEL TO FOOTING
NTS

7 PIPE TRENCH FOOTING DETAIL
NTS

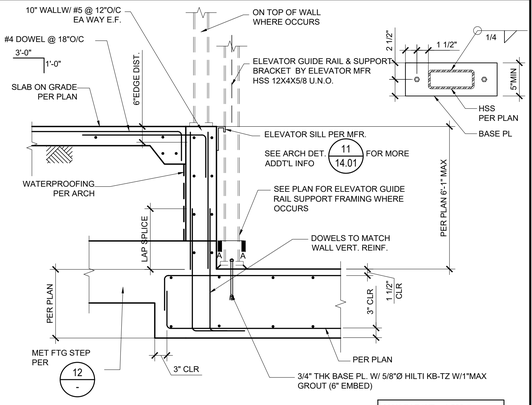

MAX CAR WT = 4,500 #
MAX CAR CAPACITY = 4,000 #

8 ELEVATOR PIT DETAIL
NTS

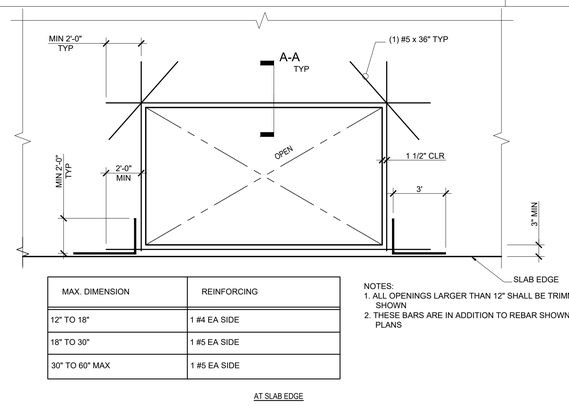

MAX. DIMENSION	REINFORCING
12" TO 18"	1 #4 EA SIDE
18" TO 30"	1 #5 EA SIDE
30" TO 60" MAX	1 #5 EA SIDE

AT SLAB EDGE

NOTES:
1. ALL OPENINGS LARGER THAN 12" SHALL BE TRIMMED AS SHOWN
2. THESE BARS ARE IN ADDITION TO REBAR SHOWN ON PLANS

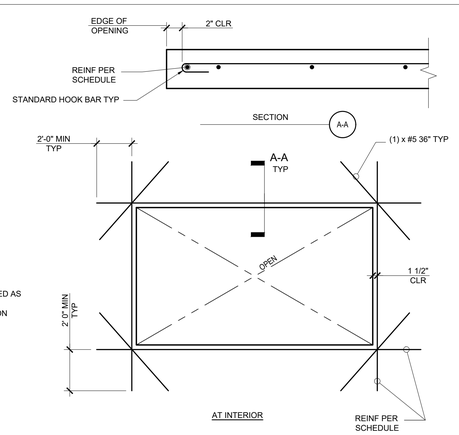

9 OPENING IN SLAB ON GRADE
NTS

10 DETAIL
NTS

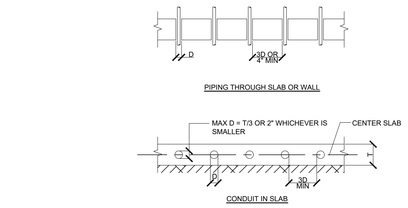

NOTES:
1. NO CONDUIT SHALL BE ALLOWED IN SLABS UNLESS "T" IS A MINIMUM OF 6".
2. WHERE CLEAR DISTANCE BETWEEN SLEEVES CANNOT BE ACHIEVED, THIS AREA SHALL BE TREATED AS A SLAB OPENING PER TYPICAL OPENING IN SLAB ON GRADE DETAIL.
3. SEE MECHANICAL AND ELECTRICAL DRAWINGS FOR LOCATION.
4. USE OF ALUMINUM CONDUIT IS PROHIBITED.

11 PIPING & CONDUIT IN OR THROUGH SLAB
NTS

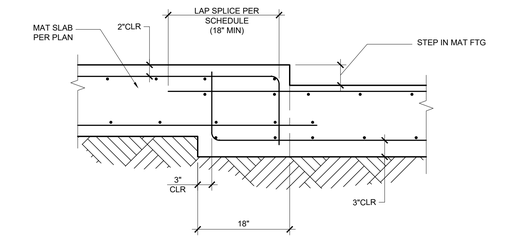

12 STEP@MAT FTG
NTS

13 DETAIL
NTS

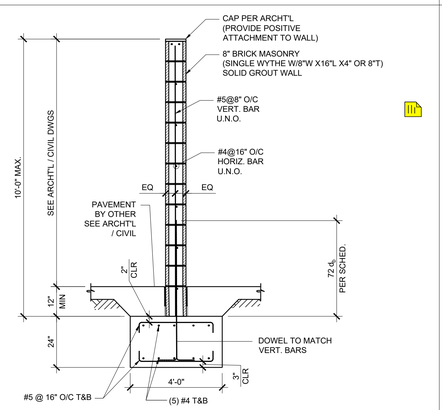

14 FREE STANDING SITE WALL
NTS

15 DETAIL
NTS

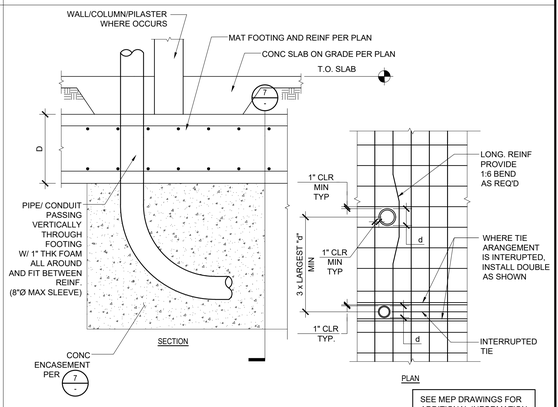

SEE MEP DRAWINGS FOR ADDITIONAL INFORMATION

16 PIPE/ CONDUIT SWEEP THRU MAT FOOTING
NTS

IDENTIFICATION STAMP
DIV. OF THE STATE ARCHITECT
APP. 03-119458 INC:
REVIEWED FOR
SS ☑ FLS ☑ ACS ☑
DATE:05/23/2019

DIVISION OF STATE ARCHITECT
355 South Grand Avenue, Suite 2100
Los Angeles, California. 90012
ph: (213) 897-3995 Fax: (213) 897-3159
agency

tBP architecture planning interiors
tBP/Architecture
4611 Teller Avenue
Newport Beach, CA 92660
ph: 949.673.0300 fx: 949.732.3895
architect

VCA ENGINEERS INC
2151 Michelson Dr. #240
Irvine, CA 92612
Tel. 949.679.0870
Fax. 949.679.9370
Project No.: E358
consultant

COMPTON COLLEGE
INSTRUCTIONAL BUILDING No. 2
COMPTON COMMUNITY COLLEGE DISTRICT
1111 E. ARTESIA BLVD. COMPTON, CA.
owner

tBP project number : 20998.00
file name:
drawn by: checked by:
date: 04/08/19

Rev:	date:	description:

THIS DRAWING AND THE DESIGNS, REPETITIONS, IDEAS AND OTHER INFORMATION CONTAINED HEREIN CONSTITUTE UNPUBLISHED WORK OF tBP/ARCHITECTURE AND SHALL REMAIN THE PROPERTY OF tBP/ARCHITECTURE IN PERPETUITY. NO PART THEREOF SHALL BE REPRODUCED, DISCLOSED, DISTRIBUTED, SOLD, PUBLISHED OR OTHERWISE USED IN ANY WAY WITHOUT THE ADVANCED EXPRESS WRITTEN CONSENT OF tBP/ARCHITECTURE.

drawing title:
TYPICAL DETAILS

drawing no.:
S0-1.2
drawing of

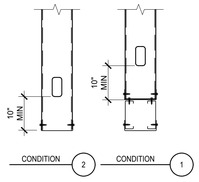

NON-BEARING - HEADER DIRECTLY OVER OPENING

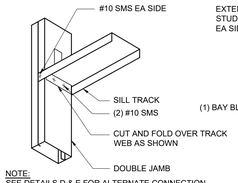

NOTE:
SEE DETAILS D & E FOR ALTERNATE CONNECTION AS CONTRACTORS OPTION.

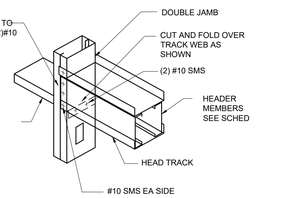

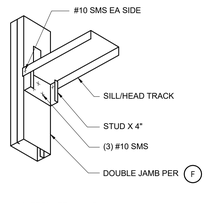

JAMB STUD SCHEDULE		
MAX OPENING "L" OR COMBINED OPENING L= L(RIGHT) + L (LEFT) AT ADJACENT OPENING	HT < 16'-0" (INTERIOR)	
	STUDS	CONN AT TOP TRACK
L ≤ 6'-0"	(2) 400S162-33	SL362*
	(2) 600S162-33	SL600*
6'-0" ≤ L ≤ 10'-0"	(2) 400S162-33	SL362*
	(2) 600S162-43	SL600*
10'-0" ≤ L ≤ 16'-0"	(2) 400S162-43	SL362*
	(2) 600S162-43	SL600*

NOTES:
1. JAMB STUDS DEPTHS SHALL MATCH TYPICAL WALL STUD DEPTHS.
2. * DENOTES TSN (THE STEEL NETWORK) CLIPS. (ICC-ESR-2049)

HEADER DETAIL A

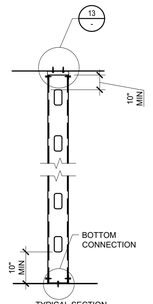

TYPICAL SECTION

DETAIL B

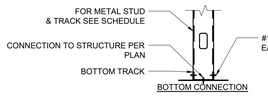

BOTTOM CONNECTION

DETAIL C

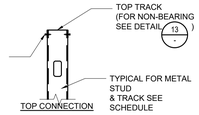

TOP CONNECTION

ALTERNATE D

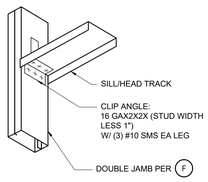

TYP. JAMB SHCEDULE F

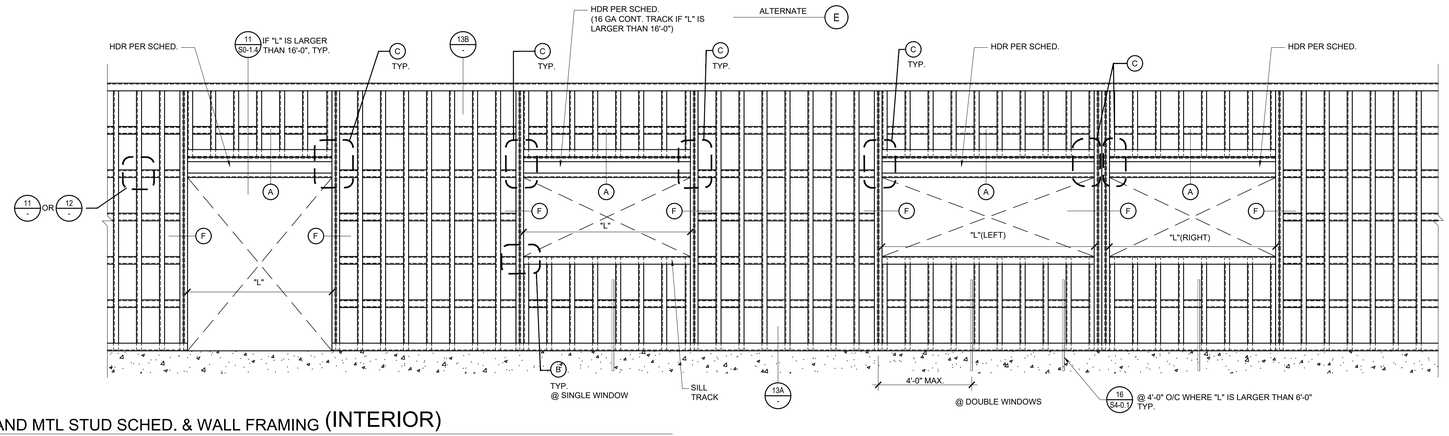

5 TYPICAL NON-BEARING AND MTL STUD SCHED. & WALL FRAMING (INTERIOR)
NTS

NOTE:
1. PROVIDE STUDS, TRACKS AND BRACING PER SCHEDULE BELOW:

METAL STUD SCHEDULE UNO ON PLAN REF: STEEL STUD MANUFACTURER'S ASSOCIATION (ESR-3064P)						
TRACK	NOMINAL STUD SIZE	SSMA PRODUCT IDENTIFICATION	STUD SPACING	MINIMUM PROPERTIES		
				Ix (in⁴)	Sx (in³)	Ma (in-k)
BOTTOM TRACK	6"x1 1/2"x16GA	600T150-54	-	2.400	0.609	18.24
TOP TRACK	6"x1 1/2"x16GA	600T150-54	-	2.400	0.609	18.24
CAPPING TRACK	6"x2"x16GA	600T200-54	-	2.641	0.717	21.48

MAX HT FOR INTERIOR METAL STUD SIZE (1 5/8" FLANGE WIDTH) @ 16" O/C					
GAUGE	MEMBER WEB DEPTH				
	2 1/2"	3 5/8"	4"	6"	8"
14	11'-5"	17'-5"	18'-10"	26'-2"	33'-4"
16	-	16'-4"	17'-8"	24'-6"	31'-1"
18	-	15'-3"	16'-6"	22'-10"	29'-0"

HEADER BEAM SCHEDULE (INTERIOR NON-BEARING PARTITIONS) MAX WIND = 5PSF		
SPAN "L"	CONDITION	LINTEL SIZE
≤ 4'-0"	DET. A - 2	16 GA TRACK, WIDTH TO MATCH
> 4'-0" - ≤ 8'-0"	DET. A - 1	(2) 6"X20 GA METAL STUDS (600S162-33)
> 8'-0" - ≤ 12'-0"	DET. A - 1	(2) 6"X18 GA METAL STUDS (600S162-43)
> 12'-0" - ≤ 16'-0"	DET. A - 1	(2) 8"X16 GA METAL STUDS (800S162-54)

2. ALL STUDS AND TRACKS SHALL CONFORM TO ASTM A1003.
   a. 18GA AND LIGHTER: MINIMUM YIELD POINT OF 33 KSI
   b. 16GA AND HAVIER: MINIMUM YIELD POINT OF 50 KSI.
   c. ALL STUDS AND TRACKS SHALL BE MANUFACTURED BY CURRENT MEMBERS OF THE STEEL STUD MANUFACTURERS ASSOCIATION (SSMA) LISTED IN ICC REPORT NO. ESR-3064P. ALL STUDS AND TRACKS SHALL COMPLY WITH ICC REPORT NO. ESR-3064P.
3. ALL FRAMING COMPONENTS SHALL BE CUT SQUARELY OR ON ANGLE (SUCH AS BRACING) TO SQUARELY FIT AGAINST ABUTTING MEMBERS. MEMBERS SHALL BE HELD FIRMLY POSITION UNTIL PROPERLY FASTENED.
4. STUD AND TRACKS SHALL BE ATTACHED BY WELDING AND SHEET METAL SCREWS AS NOTED ON THE DRAWINGS.
5. MANUFACTURER PROVIDED PUNCH-OUTS MAY BE LOCATED ALONG THE CENTERLINE OF THE WEBS OF THE FRAMING MEMBERS. PUNCH-OUTS SHALL HAVE A MINIMUM CENTER-TO-CENTER SPACING OF 24". PUNCH-OUT SHALL HAVE A MAXIMUM WIDTH OF HALF THE MEMBER DEPTH OR 2 1/2", WHICHEVER IS LESS, AND MAXIMUM LENGTH OF 4 1/2".
6. SPLICES IN STUDS AND BRACES SHALL NOT PERMITTED.
7. ALL FRAMING SHALL BE COORDINATED WITH GLAZING MANUFACTURERS, MECHANICAL, ELECTRICAL, PLUMBING AND OTHER TRADES.
8. PROVIDE 0.08" THICK x 1.1" SQUARE OR 1.425" ROUND WASHERS FOR ALL POWDER ACTUATED FASTENERS.
9. LOCATE PUNCHOUTS 10" CLEAR OF CONNECTIONS. IF PUNCH IS CLOSER THAN 10" TO CONNECTION, SEE DETAIL 13C

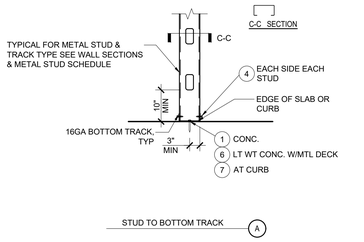

STUD TO BOTTOM TRACK A

NOTES:
1. FOR STEEL STUD AND TRACK TYPE SEE PLANS, SECTIONS AND METAL STUD SIZE SCHEDULE ON DETAIL 5
2. FOR METAL STUD FASTENERS, SEE METAL STUD FASTENER SCHEDULE.
3. ALL POWER DRIVEN FASTENERS TO HAVE A MINIMUM PENETRATION OF 1 1/4".

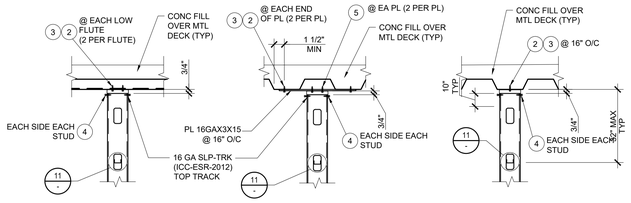

STUD PERPENDICULAR TO STEEL DECK | STUD PARALLEL TO STEEL DECK BETWEEN FLUTES | STUD PARALLEL TO STEEL DECK ON FLUTE

STUD TO DECK DETAIL B

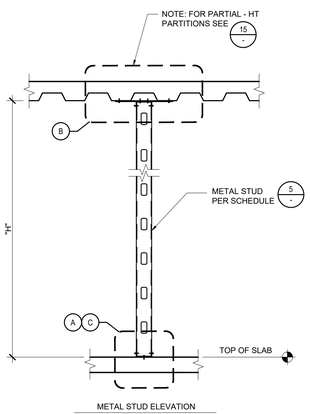

METAL STUD ELEVATION

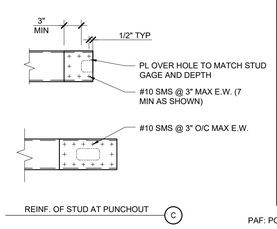

REINF. OF STUD AT PUNCHOUT C

METAL STUD FASTENER SCHEDULE		
MARK	FASTENERS SIZE & SPACING	REMARKS
1	HILTI 0.157" DIA. X-U SHOT PIN @ 32" O/C W. 1 1/2 " MIN EMBED	ESR-2269
2	HILTI 0.157" DIA. X-U SHOT PIN @COMPOSITE DECK	ESR-2269
3	#10 SMS AT ROOF METAL DECK	ESR-1408
4	#10 SHEET METAL SCREW	ESR-1408
5	#12 SHEET METAL SCREW	ESR-1408
6	HILTI KH-EZ 1/4" X 1.18" EMBED. SCREW ANCHOR @ 24" O/C	ESR-3027
7	5/8" X 12" HEADED BOLT @ 32"O/C W/ STD WASHER TYP. (MIN.7"EMBED)	-

PAF: POWER ACTUATED FASTENER (LOW VELOCITY) OR POWER DRIVEN FASTENER 5

HOLES FOR A.B. SHALL BE 1/16" LARGER THAN BOLT SIZE.

NOTES:
1. MAXIMUM STUD HEIGHT "H" FOR STUDS @ 16" O/C PER SCHEDULE
2. SEE ARCHITECTURAL FOR OTHER CONDITIONS.
3. LIMIT PER (2017 CBC TABLE 1604A.3)
   L/360 - W/ PLASTER AND STUCCO FINISHES.
   L/240 - W/ OTHER BRITTLE FINISHES.
   L/120 - W/ FLEXIBLE FINISHES.
4. STUDS CARRYING EQUIPMENT OR CASEWORK WEIGHING 40 LBS OR MORE SHALL BE 16GA MIN.

13 STEEL STUD FLANGE BRACING DETAIL (INTERIOR ONLY)
NTS

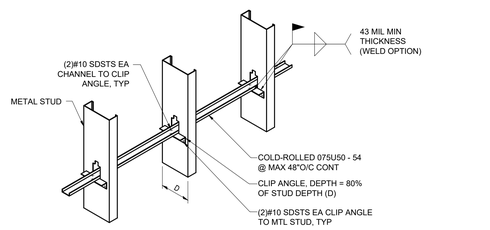

SEE SCHEDULE ON THIS SHEET FOR METAL STUD & TRACK SIZES

WHERE GYP BOARD OR PLYWOOD OCCURS ON ONE SIDE SEE DET. 12

11 BRIDGING CHANNEL W/ CLIP ANGLE (WITHOUT PLYWOOD/GYP BOARD)
NTS

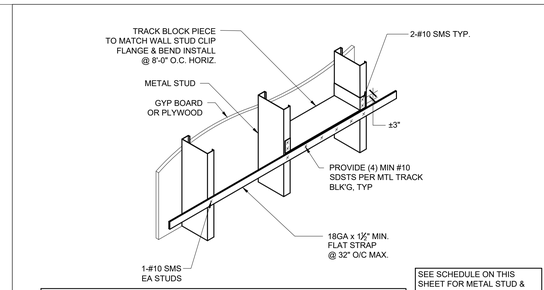

GYPSUM BOARD REQUIREMENTS INFO:
MINIMUM 5/8" THK TYPE X GYPSUM BOARD
GYPSUM BOARD SHALL BE FULL HEIGHT (TOP TRACK TO BOTTOM TRACK)
ATTACHMENT SHALL BE WITH #6 TYPE S DRYWALL SCREWS SPACED AT 16" O/C MAX
SEE ICC ESR 3064P FOR ADDITIONAL INFORMATION/REQUIREMENTS.

WHERE GYPSUM BOARD IS ATTACHED AS DESCRIBED ABOVE ON BOTH SIDES OF WALL, STRAPS/BRIDGING MAY BE OMITTED.

SEE SCHEDULE ON THIS SHEET FOR METAL STUD & TRACK SIZES

WHERE GYP BOARD OR PLYWOOD DOES NOT OCCUR SEE DET. 11

12 SINGLE FLAT STRAP BRIDGING W/ BLOCKING (WITH PLYWOOD/GYP BOARD ON ONE SIDE)
NTS

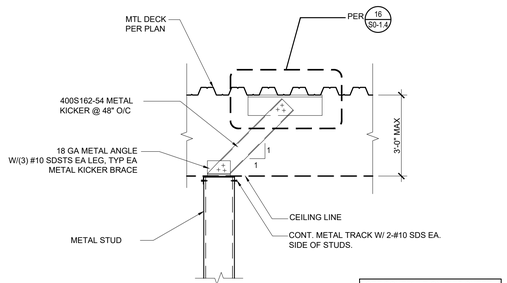

SEE SCHEDULE ON THIS SHEET FOR METAL STUD & TRACK SIZES

15 NON-LOAD BEARING INTERIOR WALL FRAMED TO CEILING W/ DIAGONAL KICKER
NTS

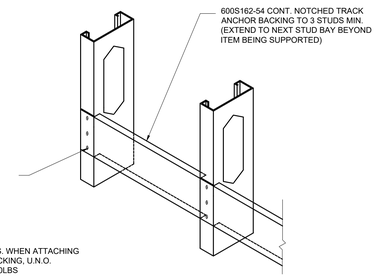

NOTE:
1. USE #10 S.M.S. WHEN ATTACHING ITEMS TO BACKING, U.N.O.
2. MAX WT. = 150LBS

16 BACKING DETAIL
NTS

IDENTIFICATION STAMP
DIV. OF THE STATE ARCHITECT
APP. 03-119458 INC:
REVIEWED FOR
SS ☑ FLS ☑ ACS ☑
DATE:05/23/2019

DIVISION OF STATE ARCHITECT
355 South Grand Avenue, Suite 2100
Los Angeles, California. 90012
ph: (213) 897-3995 Fax: (213) 897-3159
agency

tBP
architecture planning interiors
tBP/Architecture
4611 Teller Avenue
Newport Beach, CA 92660
ph: 949.673.0300 fx: 949.732.3895
architect

VCA ENGINEERS INC
2151 Michelson Dr. #240
Irvine, CA 92612
Tel. 949.679.0870
Fax. 949.679.9370
Project No.: E358

REGISTERED PROFESSIONAL ENGINEER No. S4029 Exp. 9/30/20 STRUCTURAL STATE OF CALIFORNIA

consultant

COMPTON COLLEGE INSTRUCTIONAL BUILDING No. 2

COMPTON COMMUNITY COLLEGE DISTRICT
1111 E. ARTESIA BLVD. COMPTON, CA.

owner

tBP project number : 20998.00
file name:
drawn by: checked by:
date: 04/08/19

Rev:	date:	description:

THIS DRAWING AND THE DESIGNS, DEPICTIONS, IDEAS AND OTHER INFORMATION CONTAINED HEREIN CONSTITUTE UNPUBLISHED WORK OF tBP/ARCHITECTURE AND SHALL REMAIN THE PROPERTY OF tBP/ARCHITECTURE IN PERPETUITY. NO PART THEREOF SHALL BE REPRODUCED, DISCLOSED, DISTRIBUTED, SOLD, PUBLISHED OR OTHERWISE USED IN ANY WAY WITHOUT THE ADVANCED EXPRESS WRITTEN CONSENT OF tBP/ARCHITECTURE.

drawing title:
TYPICAL DETAILS

drawing no.:
S0-1.3
drawing of

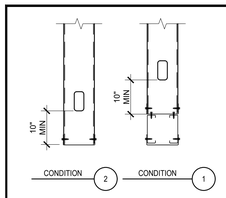

NON-BEARING - HEADER DIRECTLY OVER OPENING

HEADER DETAIL A

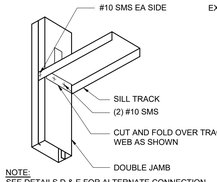

NOTE:
SEE DETAILS D & E FOR ALTERNATE CONNECTION AS CONTRACTORS OPTION.

DETAIL B

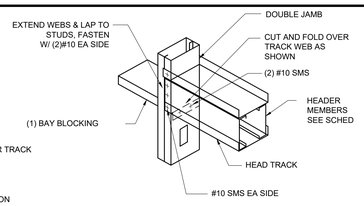

DETAIL C

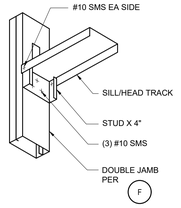

ALTERNATE D

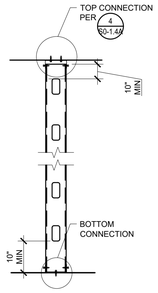

TYPICAL SECTION
(@BALLOON FRAMED SEE 13/-)

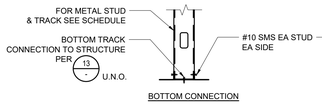

BOTTOM CONNECTION

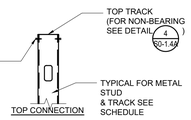

TOP CONNECTION

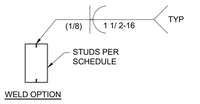

WELD OPTION

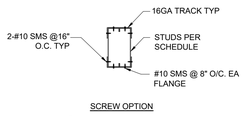

SCREW OPTION

F

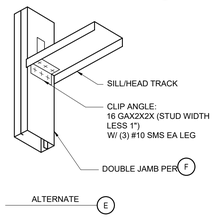

ALTERNATE E

JAMB STUD SCHEDULE		
MAX OPENING "L"	HT.≤ 16'-0"	
	STUDS	CONN AT TOP TRACK
L ≤ 6'-0"	(2) 600S162-54	SL600*
6'-0" ≤ L ≤ 10'-0"	(2) 600S162-68	SL600*

NOTES:
1. JAMB STUDS DEPTHS SHALL MATCH TYPICAL WALL STUD DEPTHS.
2. * DENOTES TSN (THE STEEL NETWORK) CLIPS. (ICC-ESR-2049)

TYP. JAMB SHCEDULE

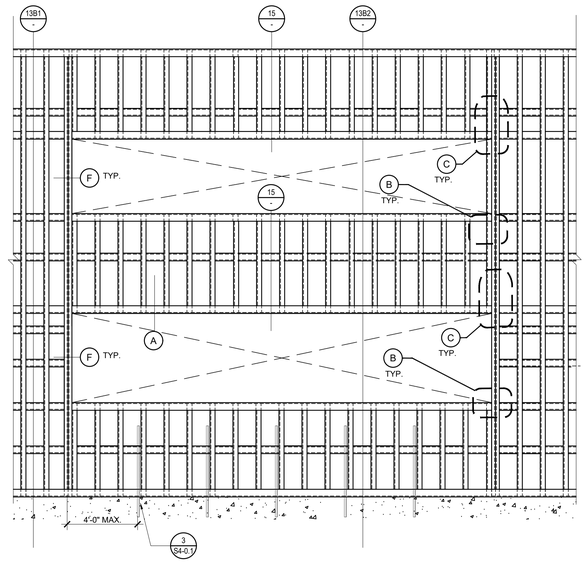

TYP. WALL ELEVATION

NOTE:
1. PROVIDE STUDS PER PLAN AND TRACKS AND BRACING PER SCHEDULE BELOW:

METAL STUD SCHEDULE UNO ON PLAN REF: STEEL STUD MANUFACTURER'S ASSOCIATION (ESR-3064P)						
TRACK	NOMINAL STUD SIZE	SSMA PRODUCT IDENTIFICATION	STUD SPACING	MINIMUM PROPERTIES		
				Ix (in^4)	Sx (in^3)	Ma (in-k)
BOTTOM TRACK	6"x1 1/2"x16GA	600T150-54	-	2.400	0.609	18.24
TOP TRACK	6"x1 1/2"x16GA	600T150-54	-	2.400	0.609	18.24
CAPPING TRACK	6"x2"x16GA	600T200-54	-	2.641	0.717	21.48

HEADER BEAM SCHEDULE UNO ON PLAN (EXTERIOR CURTAIN WALLS) MAX WIND = 43PSF		
SPAN "L"	CONDITION	LINTEL SIZE
≤ 6' 0"	DET. A - 1	(2) 6"X20 GA METAL STUDS (600S162-33)
> 6' 0" - ≤ 8' 0"	DET. A - 1	(2) 6"X18 GA METAL STUDS (600S162-43)
> 8' 0" - ≤ 10' 0"	DET. A - 1	(2) 8"X16 GA METAL STUDS (600S162-54)

2. ALL STUDS AND TRACKS SHALL CONFORM TO ASTM A1003.
   a. 18GA AND LIGHTER: MINIMUM YIELD POINT OF 33 KSI
   b. 16GA AND HAVIER: MINIMUM YIELD POINT OF 50 KSI.
   c. ALL STUDS AND TRACKS SHALL BE MANUFACTURED BY CURRENT MEMBERS OF THE STEEL STUD MANUFACTURERS ASSOCIATION (SSMA) LISTED IN ICC REPORT NO. ESR-3064P. ALL STUDS AND TRACKS SHALL COMPLY WITH ICC REPORT NO. ESR-3064P.
3. ALL FRAMING COMPONENTS SHALL BE CUT SQUARELY OR ON ANGLE (SUCH AS BRACING) TO SQUARELY FIT AGAINST ABUTTING MEMBERS. MEMBERS SHALL BE HELD FIRMLY POSITION UNTIL PROPERLY FASTENED.
4. STUD AND TRACKS SHALL BE ATTACHED BY WELDING AND SHEET METAL SCREWS AS NOTED ON THE DRAWINGS.
5. MANUFACTURER PROVIDED PUNCH-OUTS MAY BE LOCATED ALONG THE CENTERLINE OF THE WEBS OF THE FRAMING MEMBERS. PUNCH-OUTS SHALL HAVE A MINIMUM CENTER-TO-CENTER SPACING OF 24". PUNCH-OUT SHALL HAVE A MAXIMUM WIDTH OF HALF THE MEMBER DEPTH OR 2 1/2", WHICHEVER IS LESS, AND MAXIMUM LENGTH OF 4 1/2".
6. SPLICES IN STUDS AND BRACES SHALL NOT PERMITTED.
7. ALL FRAMING SHALL BE COORDINATED WITH GLAZING MANUFACTURERS, MECHANICAL, ELECTRICAL, PLUMBING AND OTHER TRADES.
8. NOT USED.
9. LOCATE PUNCHOUTS 10" CLEAR OF CONNECTIONS.

5 TYPICAL NON-BEARING AND MTL STUD SCHED. & WALL FRAMING (EXTERIOR)
NTS

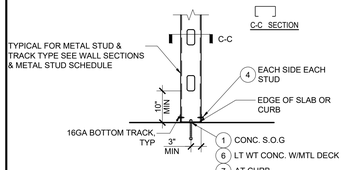

STUD TO BOTTOM TRACK A

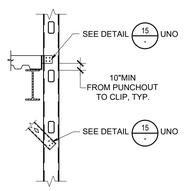

C

NOTES:
1. FOR STEEL STUD AND TRACK TYPE SEE PLANS, SECTIONS AND METAL STUD SIZE SCHEDULE ON DETAIL 5 -
2. FOR METAL STUD FASTENERS, SEE METAL STUD FASTENER SCHEDULE.

METAL STUD FASTENER SCHEDULE		
MARK	FASTENERS SIZE & SPACING	REMARKS
1	5/8" X 12" HEADED BOLT @ 32"O/C W/ STD WASHER TYP. (MIN.7"EMBED)	-
2	HILTI KH-EZ 3/8"X2 1/2"EMBED. @COMPOSITE DECK	ESR-2269
3	#10 SMS AT ROOF METAL DECK (2 PER LOW FLUTE)	ESR-1408
4	#10 SHEET METAL SCREW	ESR-1408
5	#12 SHEET METAL SCREW	ESR-1408
6	HILTI KH-EZ 3/8" X 2" EMBED. SCREW ANCHOR @ 24" O/C	ESR-3027
7	5/8" X 12" HEADED BOLT @ 32"O/C W/ STD WASHER TYP. (MIN.7"EMBED)	-

HOLES FOR A.B. SHALL BE 1/16" LARGER THAN BOLT SIZE.

NOTES:
1. NOT USED.
2. SEE ARCHITECTURAL FOR OTHER CONDITIONS.
3. LIMIT PER (2016 CBC TABLE 1604A.3)
   L/360 - W/ PLASTER AND STUCCO FINISHES.
   L/240 - W/ OTHER BRITTLE FINISHES.
   L/120 - W/ FLEXIBLE FINISHES.
   L/600 - W/ ANCHORED VENNERS.
4. STUDS CARRYING EQUIPMENT OR CASEWORK WEIGHING 40 LBS OR MORE SHALL BE 16GA.MIN.
5. LOCATE PUNCHOUTS 10" CLEAR OF CONNECTIONS.

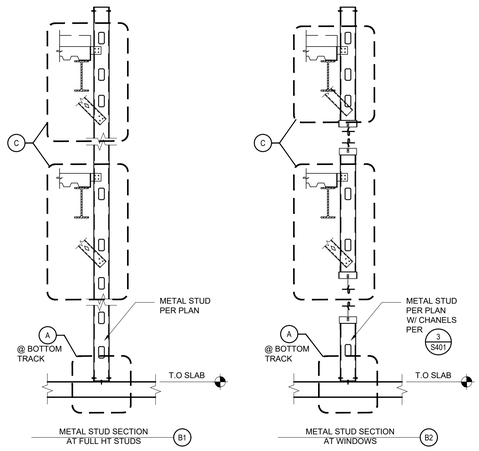

13 STEEL STUD FLANGE BRACING DETAIL (EXTERIOR ONLY)
NTS

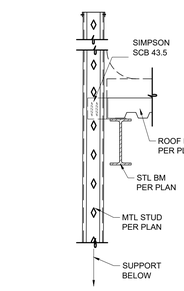

A ROOF: FULL HT.

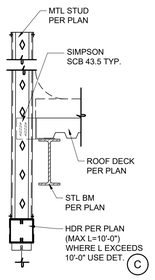

B ROOF: WINDOW <10' W/ HDR

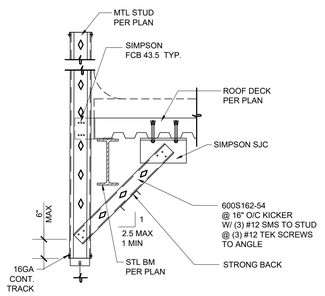

C ROOF: WINDOW >10'

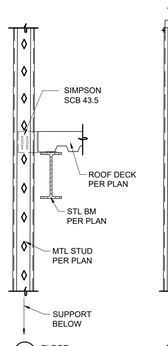

D FLOOR: FULL HT.

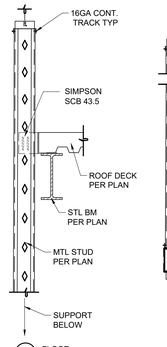

D1 FLOOR: FULL HT.

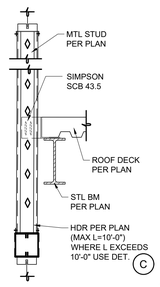

E FLOOR: WINDOW <10' W/ HDR

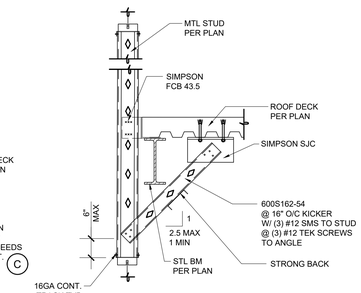

F FLOOR: WINDOW >10'

SIMPSON SCB 43.5	W/ (2) #14 SHOULDERED SCREWS INTO STUD & (4) #12 TEK SCREW INTO CLOSURE PL (IAPMO #238)
SIMPSON FCB 43.5	W/ (6) #12 SMS INTO STUD & (4) #12 TEK SCREW INTO CLOSURE PL (IAPMO #238)

SIMPSON SJC 10.25	W/ (6) #10 TO STUD & (2) 3/8"Ø TITEN HD TO DECK (2 1/2" EMBED) (SEE DET B1 @16/S0-1.4 WHEN SJC IS PARALLEL TO DECK)
STRONG BACK	W/ (2) #10 SMS TO EA BRACE IF BRACE EXCEEDS 9'-0" LONG

15 TYPICAL EXT. WALL CONNECTION TO BLDG
NTS

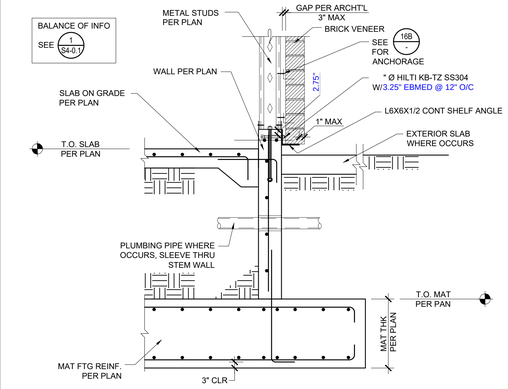

A BRICK VENEER @ FOUNDATION

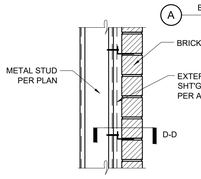

METAL STUD

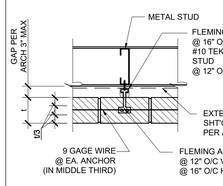

SECTION D-D

*HALFEN HFA FLEMING ANCHOR SYSTEM: LARR 24560

B BRICK VENEER ANCHORAGE

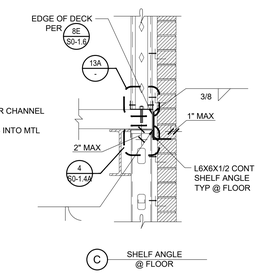

C SHELF ANGLE @ FLOOR

16 DETAIL
NTS

IDENTIFICATION STAMP
DIV. OF THE STATE ARCHITECT
APP. 03-119458 INC:
REVIEWED FOR
SS ☑ FLS ☑ ACS ☑
DATE:05/23/2019

DIVISION OF STATE ARCHITECT
355 South Grand Avenue, Suite 2100
Los Angeles, California. 90012
ph: (213) 897-3995 Fax: (213) 897-3159
agency

tBP
architecture
planning
interiors
tBP/Architecture
4611 Teller Avenue
Newport Beach, CA 92660
ph: 949.673.0300 fx: 949.732.3895
architect

VCA ENGINEERS INC
CIVIL • STRUCTURAL
2151 Michelson Dr. #240
Irvine, CA 92612
Tel. 949.679.0870
Fax. 949.679.9370
Project No.: E358
REGISTERED PROFESSIONAL ENGINEER
No. S4029
Exp. 9/30/20
STRUCTURAL
STATE OF CALIFORNIA
consultant

COMPTON COLLEGE
INSTRUCTIONAL BUILDING No. 2

COMPTON COMMUNITY COLLEGE DISTRICT
1111 E. ARTESIA BLVD. COMPTON, CA.

owner

tBP project number : 20998.00
file name:
drawn by: checked by:
date: 04/08/19

Rev:	date:	description:

THIS DRAWING AND THE DESIGNS, DEPICTIONS, IDEAS AND OTHER INFORMATION CONTAINED HEREIN CONSTITUTE UNPUBLISHED WORK OF tBP/ARCHITECTURE AND SHALL REMAIN THE PROPERTY OF tBP/ARCHITECTURE IN PERPETUITY. NO PART THEREOF SHALL BE REPRODUCED, DISCLOSED, DISTRIBUTED, SOLD, PUBLISHED OR OTHERWISE USED IN ANY WAY WITHOUT THE ADVANCED EXPRESS WRITTEN CONSENT OF tBP/ARCHITECTURE.

drawing title:
TYPICAL DETAILS

drawing no.:
S0-1.3A
drawing of

SCHEDULE (SSMA ER-4943P)						
SPECIFIED FOR THIS PROJECT	MEMBER DESIGNATION	DESIGN THICKNESS IN	REFERENCE GAUGE NO.	SECTION PROPERTIES		
				AREA IN ^{2}	Ixx IN ^{4}	Iyy IN ^{4}
*	250S137-54	0.0566	16	0.316	0.318	0.080
*	400S162-54	0.0566	16	0.433	1.098	0.159
*	400S200-54	0.0566	16	0.500	1.292	0.287
*	400S200-68	0.0713	14	0.622	1.581	0.349
*	400S250-54	0.0566	16	0.566	1.509	0.515
*	400S250-68	0.0713	14	0.696	1.834	0.630
*	600S200-33	0.0346	20	0.379	2.075	0.209
*	600S250-68	0.0713	14	0.836	4.686	0.688
*	800S250-68	0.0713	14	0.976	9.209	0.752
*	400T150-33	0.0346	20	0.242	0.622	0.051
*	400T200-54	0.0566	16	0.452	1.269	0.182
*	400T200-68	0.0713	14	0.569	1.617	0.227
*	600T150-33	0.0346	20	.0311	1.590	0.057
*	600T200-97	0.1017	12	1.015	5.773	0.354
*	800T200-97	0.1017	12	1.218	11.212	0.379
*	400Z250-54	0.0566	16	0.566	1.544	1.079
*	400Z250-68	0.0713	14	0.696	1.819	1.288
*	600Z250-54	0.0566	16	0.680	3.910	1.079
*	600Z250-68	0.0713	14	0.836	4.662	1.288
*	800Z250-54	0.0566	16	0.794	7.628	1.079
*	800Z250-68	0.0713	14	0.976	9.176	1.289
*	1000Z250-68	0.0713	14	1.116	15.641	1.289
*	087F125-27	0.0283	22	0.104	0.013	-

NOTES:

1. ALL STEEL 54 MILS AND THICKER (16 GA AND THICKER) SHALL BE MINIMUM YIELD STRENGTH FY = 50 KSI, COMPLYING WITH ASTM A653 SS GRADE 50 OR ASTM A1011 SS GRADE 50. STEEL 43 MILS AND THINNER, (18 GA AND THINNER) SHALL BE MINIMUM YIELD STRENGTH FY = 33 KSI, COMPLYING WITH ASTM A653 SS GRADE 33 OR ASTM A1011 SS GRADE 33, GALVANIZED COATING SHALL COMPLY WITH ASTM A924.
2. STUD AND TRACK DESIGNATIONS PER STEEL STUD MANUFACTURER'S ASSOCIATION (SSMA), ICC ER-4943P.
3. PROVIDE SECTIONS HAVING PROPERTIES MEETING OR EXCEEDING ABOVE TABULATED GROSS SECTION PROPERTIES, ICC ER-5912P SECTIONS ACCEPTABLE.

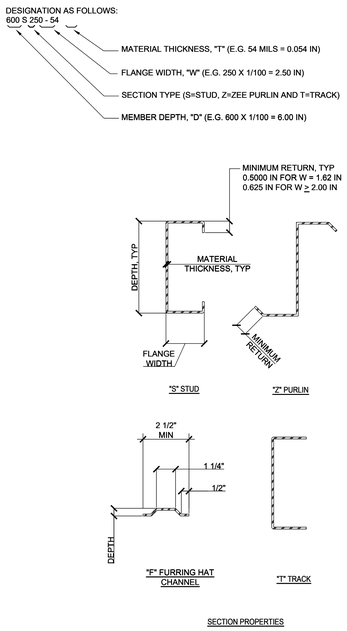

5 TYPICAL COLD-FORMED STEEL MEMBER PROPERTIES
NTS

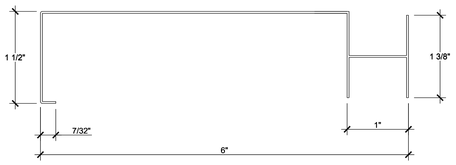

USE STEEL C-H STUD: DESIGN THICKNESS = 0.0359 in
AREA = 0.6364 in^2
Ix = 3.4 in^4
Sx = 1.094 in^3

3 COLD FORMED STEEL STUD AER-09038
NTS

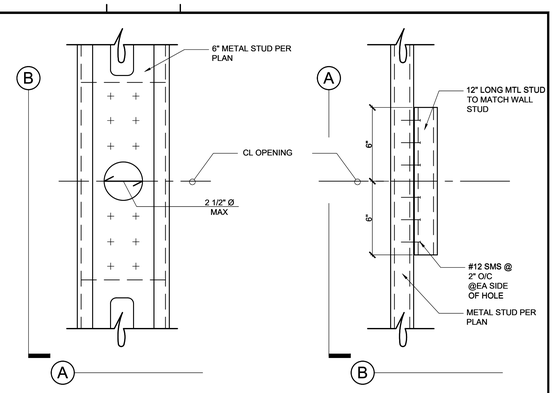

4 REINFORCING OF OPENING IN METAL STUD FOR PLUMBING
NTS

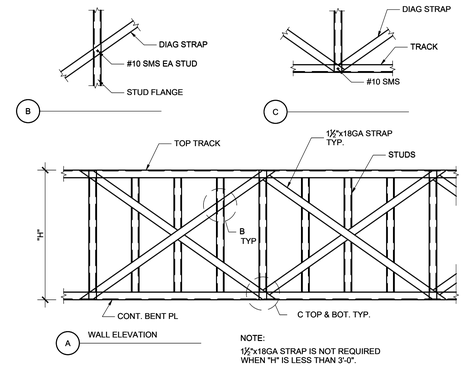

NOTE:
1½"x18GA STRAP IS NOT REQUIRED WHEN "H" IS LESS THAN 3'-0".

7 IN-PLANE BRACING
NTS

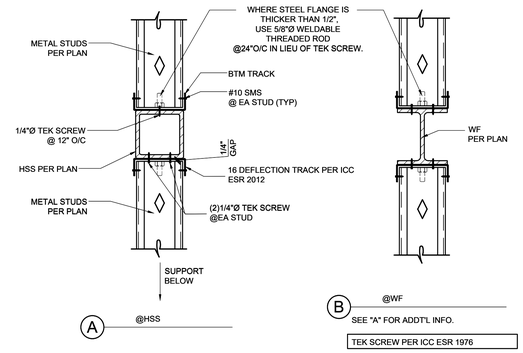

8 METAL STUD TO HSS BEAM CONNECTION (SIM @WF)
NTS

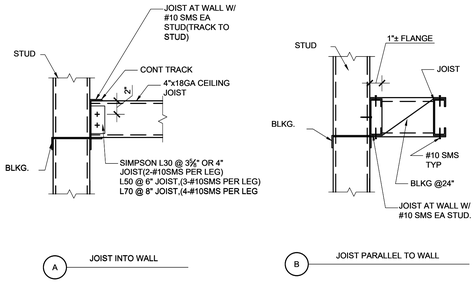

INTERIOR METAL CEILING JOIST SCHEDULE					
NOMINAL SIZE	SSMA PRODUCT IDENTIFICATION	Ixx(IN ^{4})	Sxx(IN ^{3})	SPACING (IN)	MAXIMUM SPAN (L1)
3⅝"x20GA	362S162-33	0.551	0.304	16	8'-6"
4"x18GA	400S162-43	0.892	0.446	16	9'-6"
6"x18GA	600S162-43	2.316	0.772	16	11'-0"
8"x18GA	800S162-43	4.633	1.158	16	12'-0"

NOTES:

1. JOIST AND TRACK DESIGNATIONS ARE BASED ON STEEL STUD MANUFACTURER'S ASSOCIATION(ICC ER-3064P).
2. DESIGN LOADS:
   DEAD LOAD = 20 PSF
3. SEE TYP. CEILING JOIST FRAMING DETAIL 14/-
4. PROVIDE IN-PLANE AND OUT-OF-PLANE BRACING PER 11/-
5. WHERE JOIST IS CUT, PROVIDE DOUBLE JOIST TO ADJ. CEILING JOIST NEXT TO CUT JOIST (DO NOT CUT MORE THAN ONE JOIST).
6. SEE DETAIL 10/- FOR BRACING REQUIREMENTS.

13 METAL CEILING JOIST SCHEDULE (INTERIOR ONLY)
NTS

BLOCKING NOTE:
PLACE SOLID BLOCKING AT ENDS OF FLOOR SYSTEM, ADJACENT TO ALL OPENINGS, AND AT 10'-0"O.C. MAX.

STRAP NOTE:
TOP STRAP NOT REQ'D. IF CONTINUOUSLY ATTACHED RIGID SHEATHING IS USED. TEMPORARY BRACING OF TOP FLANGE DURING CONSTRUCTION MAY BE REQ'D.

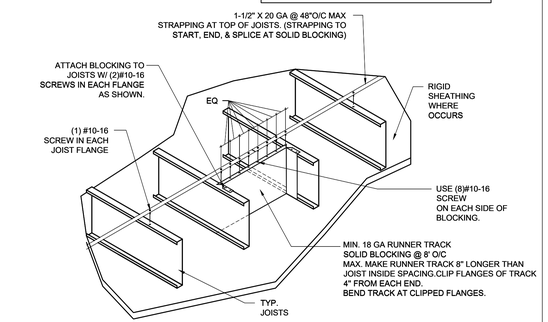

10 CEILING JOISTS FLANGE BRACING
NTS

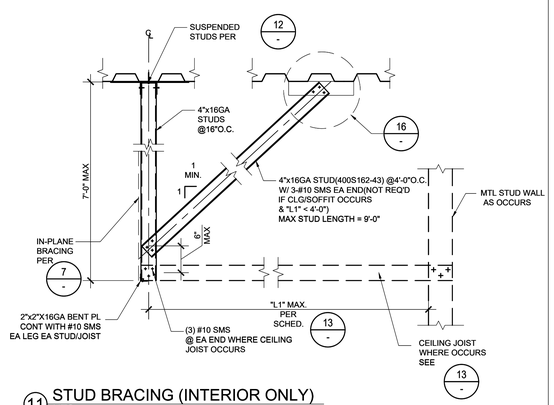

11 STUD BRACING (INTERIOR ONLY)
NTS

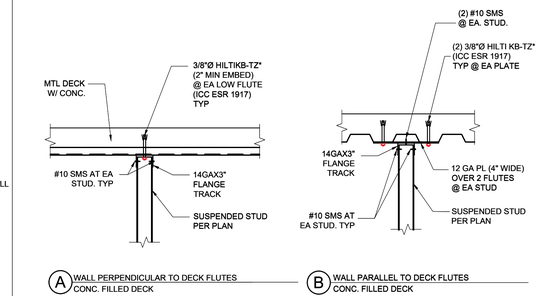

* AT EXTERIOR USE WALL SUPPORT 5/8"Ø HILTI KB-TZ W/ 3 1/2" EMBED (ICC ESR 1917)

12 SUSPENDED STUD TO METAL DECK DETAIL
NTS

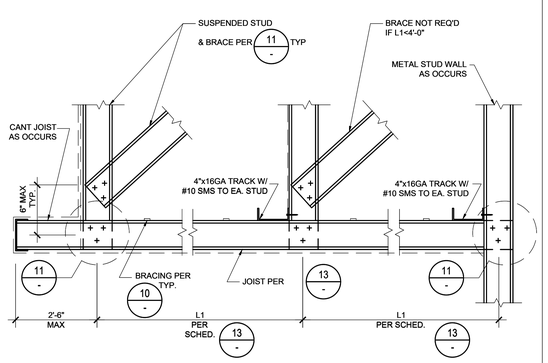

14 INTERIOR CEILING FRAMING
NTS

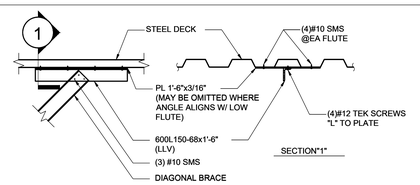

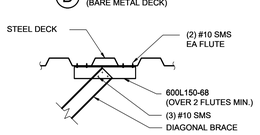

16 WALL BRACE
NTS

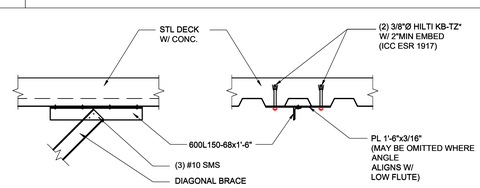

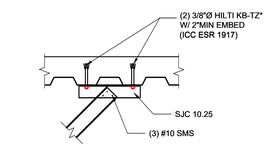

* AT EXTERIOR USE WALL SUPPORT 5/8"Ø HILTI KB-TZ W/ 3 1/2" EMBED (ICC ESR 1917)

IDENTIFICATION STAMP
DIV. OF THE STATE ARCHITECT
APP. 03-119458 INC:
REVIEWED FOR
SS ☑ FLS ☑ ACS ☑
DATE:05/23/2019

DIVISION OF STATE ARCHITECT
355 South Grand Avenue, Suite 2100
Los Angeles, California. 90012
ph: (213) 897-3995 Fax: (213) 897-3159
agency

tBP
architecture
planning
interiors

tBP/Architecture
4611 Teller Avenue
Newport Beach, CA 92660
ph: 949.673.0300 fx: 949.732.3895
architect

VCA ENGINEERS INC
CIVIL • STRUCTURAL
2151 Michelson Dr. #240
Irvine, CA 92612
Tel. 949.679.0870
Fax. 949.679.9370
Project No.: E358
REGISTERED PROFESSIONAL ENGINEER
No. S4029
Exp. 9/30/20
STATE OF CALIFORNIA
consultant

COMPTON COLLEGE
INSTRUCTIONAL BUILDING No. 2

COMPTON COMMUNITY COLLEGE DISTRICT
1111 E. ARTESIA BLVD. COMPTON, CA.

owner

tBP project number : 20998.00
file name:
drawn by: checked by:
date: 04/08/19

Rev:	date:	description:

THIS DRAWING AND THE DESIGNS, DEPICTIONS, IDEAS AND OTHER INFORMATION CONTAINED HEREIN CONSTITUTE UNPUBLISHED WORK OF tBP/ARCHITECTURE AND SHALL REMAIN THE PROPERTY OF tBP/ARCHITECTURE IN PERPETUITY. NO PART THEREOF SHALL BE REPRODUCED, DISCLOSED, DISTRIBUTED, SOLD, PUBLISHED OR OTHERWISE USED IN ANY WAY WITHOUT THE ADVANCED EXPRESS WRITTEN CONSENT OF tBP/ARCHITECTURE.

drawing title:
TYPICAL DETAILS

drawing no.:
S0-1.4
drawing of

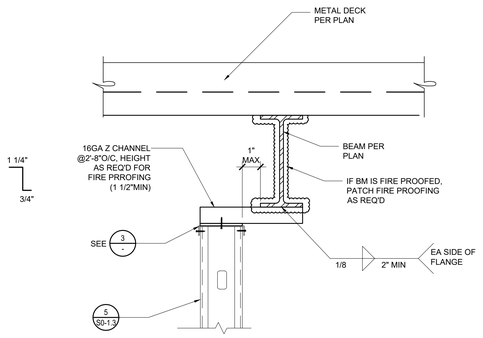

1 TYPICAL WALL BRACE NEAR BEAM
NTS

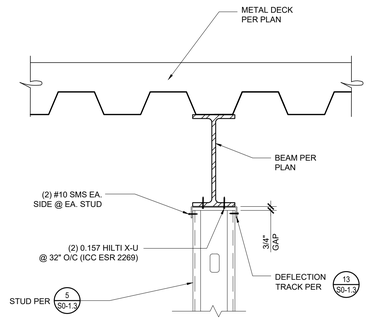

2 TYP TOP TRACK AT WALL UNDER BEAM
NTS

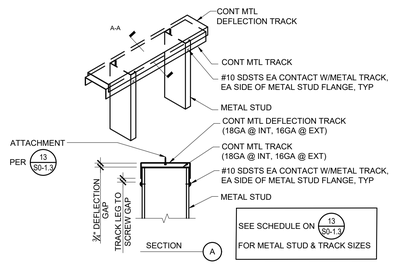

DEFLECTION TRACK ASSEMBLY
DOUBLE DEFLECTION TRACK
3 NTS

METAL STUD FASTENER SCHEDULE		
MARK	FASTENERS SIZE & SPACING	REMARKS
2	HILTI KH-EZ 3/8"X2 1/2"EMBED. @COMPOSITE DECK	ESR-2269
5	#12 SHEET METAL SCREW	ESR-1408

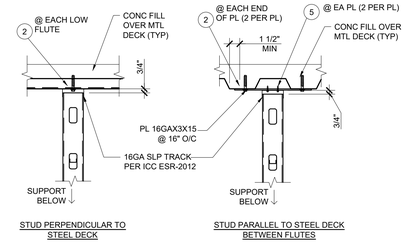

4 STUD TO DECK
NTS

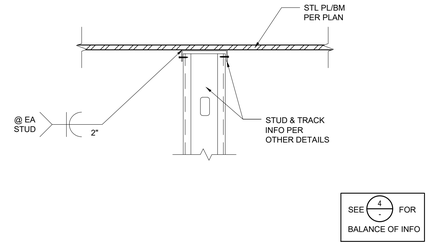

8 DETAIL
NTS

5 DETAIL
NTS

6 DETAIL
NTS

7 DETAIL
NTS

9 DETAIL
NTS

10 DETAIL
NTS

11 DETAIL
NTS

12 DETAIL
NTS

13 DETAIL
NTS

14 DETAIL
NTS

15 DETAIL
NTS

16 DETAIL
NTS

IDENTIFICATION STAMP
DIV. OF THE STATE ARCHITECT
APP. 03-119458 INC:
REVIEWED FOR
SS ☑ FLS ☑ ACS ☑
DATE:05/23/2019

DIVISION OF STATE ARCHITECT
355 South Grand Avenue, Suite 2100
Los Angeles, California. 90012
ph: (213) 897-3995 Fax: (213) 897-3159
agency

tBP
architecture
planning
interiors

tBP/Architecture
4611 Teller Avenue
Newport Beach, CA 92660
ph: 949.673.0300 fx: 949.732.3895
architect

VCA ENGINEERS INC
2151 Michelson Dr. #240
Irvine, CA 92612
Tel. 949.679.0870
Fax. 949.679.9370
Project No.: E358
No. S4029
Exp. 9/30/20
consultant

COMPTON COLLEGE
INSTRUCTIONAL BUILDING No. 2
COMPTON COMMUNITY COLLEGE DISTRICT
1111 E. ARTESIA BLVD. COMPTON, CA.
owner

tBP project number : 20998.00
file name:
drawn by: checked by:
date: 04/08/19

Rev:	date:	description:

THIS DRAWING AND THE DESIGNS, DEPICTIONS, IDEAS AND OTHER INFORMATION CONTAINED HEREIN CONSTITUTE UNPUBLISHED WORK OF tBP/ARCHITECTURE AND SHALL REMAIN THE PROPERTY OF tBP/ARCHITECTURE IN PERPETUITY. NO PART THEREOF SHALL BE REPRODUCED, DISCLOSED, DISTRIBUTED, SOLD, PUBLISHED OR OTHERWISE USED IN ANY WAY WITHOUT THE ADVANCED EXPRESS WRITTEN CONSENT OF tBP/ARCHITECTURE.

drawing title:
TYPICAL DETAILS

drawing no.:
S0-1.4A
drawing of

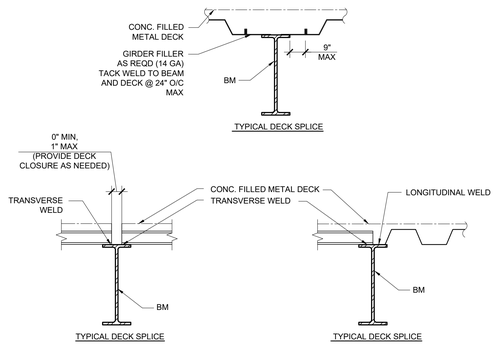

METHOD OF CONNECTIONS:

1. ROOF DECK:
   A. STEEL DECK SHALL BE FASTENED TO STEEL FRAMING AT ENDS OF UNITS AND AT ALL INTERMEDIATE SUPPORTS BY MINIMUM (4) 3/4" DIAMETER FUSION (PUDDLE) WELDS EACH PANEL. WHEN TWO PANELS ABUT, EACH PANEL SHALL BE SO ATTACHED.
   B. SIDESEAMS SHALL BE BUTTON PUNCHED AT 36" O/C
   C. AT ALL LONGITUDINAL SUPPORTS AND MEMBERS PARALLEL TO FLUTES, FASTEN WITH 3/4" DIAMETER FUSION (PUDDLE) WELDS @ 12"O/C
2. FLOOR:
   A. STEEL DECK SHALL BE FASTENED TO STEEL FRAMING AT ENDS OF UNITS AND AT ALL INTERMEDIATE SUPPORTS BY (4) 3/4"Ø DIAMETER FUSION (PUDDLE) WELDS EACH PANEL. WHEN TWO PANELS ABUT, EACH PANEL SHALL BE SO ATTACHED.
   B. SIDESEAMS SHALL BE BUTTON PUNCHED @ 36" O/C
   C. AT ALL LONGITUDINAL SUPPORTS AND MEMBERS PARALLEL TO FLUTES, FASTEN WITH 3/4"Ø FUSION (PUDDLE) WELDS @ 12" O/C

NOTES:

1. PLACE REINFORCEMENT 3/4" CLEAR FROM TOP OF CONCRETE.
2. NOT USED.
3. SEE DET. 8/S0-1.8 FOR TYPICAL WELDED STUD DETAIL FOR WELDED HEADED STUDS.
4. NOT USED.
5. SEE DET. 16/S0-1.8 FOR TYPICAL FRAMING @ COLUMN
6. NOT USED.
7. SEE DET. 4/- FOR TYP. STAIR & ELEVATOR OPENING.
8. SEE DET. 15/- FOR SLOPED DECK TO STEEL BEAM.
9. SEE DET. 12/- FOR DECK WELD/SIDE LAP DETAIL.
10. SEE DET. BELOW FOR WELD /PATTERN.

4 - WELD PATTERN

1 TYPICAL METAL DECK CONNECTIONS & PROPERTIES
NTS

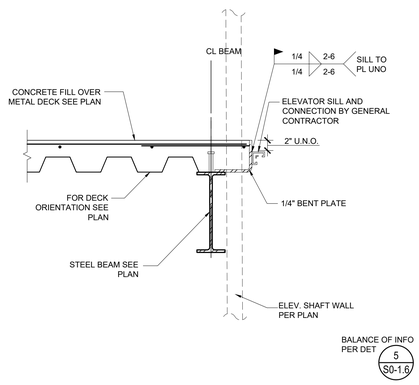

3 EDGE CLOSURE AT ELEVATOR SILL SUPPORT
NTS

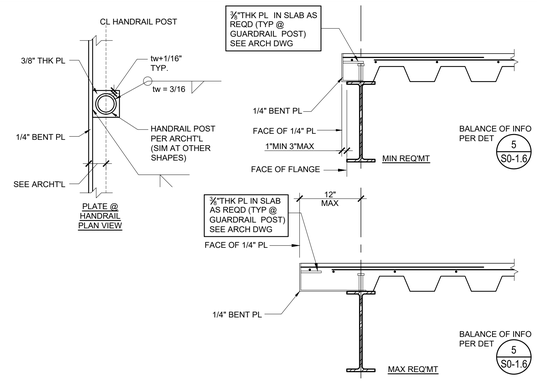

4 TYP SECTION @ STAIR & ELEVATOR OPENING UNO DECK PERP. TO FRAMING WHERE OCCURS
NTS

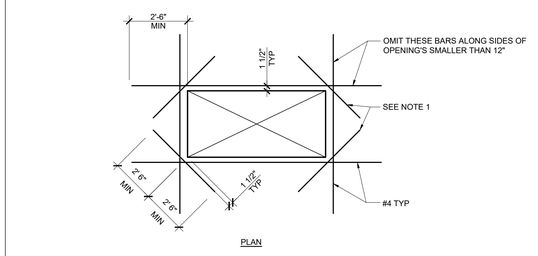

NOTES:
1. PROVIDE #4X5'-0" AT ALL RE-ENTRANT CORNERS AND AT ALL OPENINGS GREATER THAN 6'-0" SUCH AS ELEVATOR, STAIR OPENINGS AND AIR SHAFTS.

6 TYPICAL SLAB ON METAL DECK OPENING
NTS

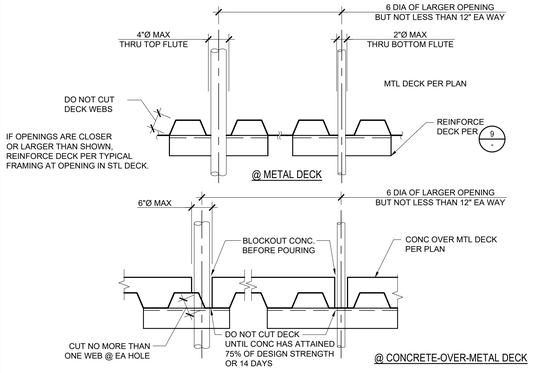

7 TYPICAL PENETRATION IN METAL DECK
NTS

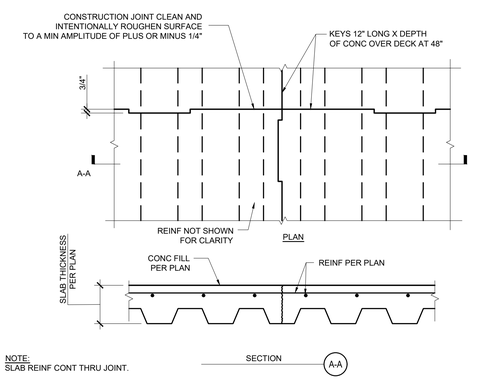

NOTE:
SLAB REINF CONT THRU JOINT.

8 TYPICAL CONST JOINT AT DECK WITH CONC FILL
NTS

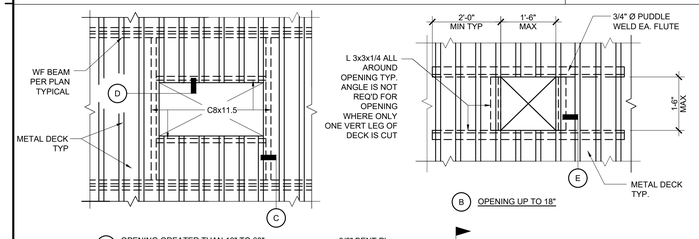

NOTES:
1. FRAMING AROUND DECK OPENINGS TO BE FURNISHED AND INSTALLED BY STRUCTURAL STEEL CONTRACTOR.
2. PROVIDE CONT BENT PLATE ALL AROUND OPENINGS AT ROOF EXHAUST FAN, DUCT & PIPE PENETRATIONS, GRAVITY RELIEF VENT, & WHERE SHOWN ON MEP DRAWINGS, SEE (F)
3. SEE (6/-) FOR TRIM BARS @OPN'G
4. FOR OPENINGS GREATER THAN 60" SEE FRAMING PLAN FOR FRAMING SIZE (USE W12X19 U.N.O.)
5. NOT ALL FRAMING SHOWN ON PLAN.

9 TYPICAL FRAMING AT OPENING IN STEEL DECK
NTS

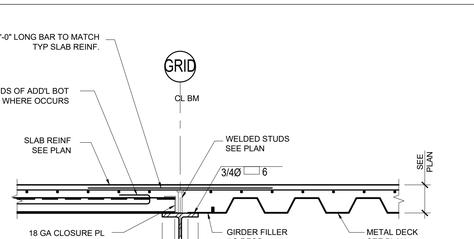

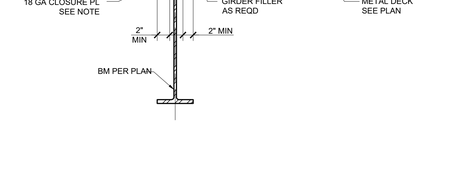

11 METAL DECK TRANSITION
NTS

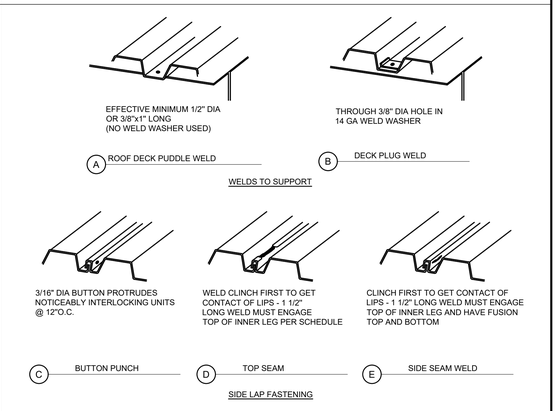

12 TYPICAL METAL DECK WELDING
NTS

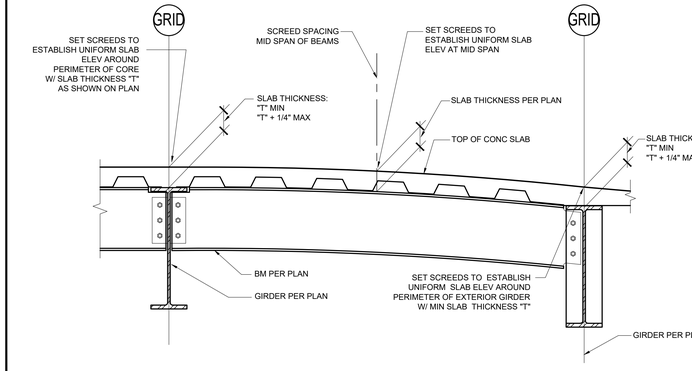

PROCEDURE FOR CONSTRUCTION OF FLOOR SLABS:

1. PROVIDE UPWARD CAMBER AT MID SPAN FOR ALL BEAMS WHERE INDICATED ON PLAN. BEAMS NOT CAMBERED HAVE TO HAVE MILL CAMBER PLACED IN UPWARD POSITION.
2. AFTER STEEL ERECTION, SURVEY THE TOP ELEVATION OF THE STRUCTURAL STEEL. SET ADJUSTABLE SCREEDS TO APPROVED FINISHED SLAB ELEVATION & MIN SLAB THICKNESS AT SUPPORTS AND TO MIN SLAB THICKNESS AT MID SPAN OF CAMBERED BEAMS.
3. AS CONCRETE IS PLACED, ADJUST SCREEDS, BY A LASER OR TRANSIT, TO PRODUCE A FLAT FINISHED CONCRETE SURFACE FROM THE CORE TO THE PERIMETER (BUT NOT NECESSARILY LEVEL) BETWEEN SUPPORTS AND MID SPAN CONTROL POINTS AS A MINIMUM. TOP OF SLAB SHALL NOT BE OUT OF LEVEL BY MORE THAN ALLOWED BY ACI AND SPECIFICATIONS.

13 SLAB CAMBERED ON STEEL BEAMS
NTS

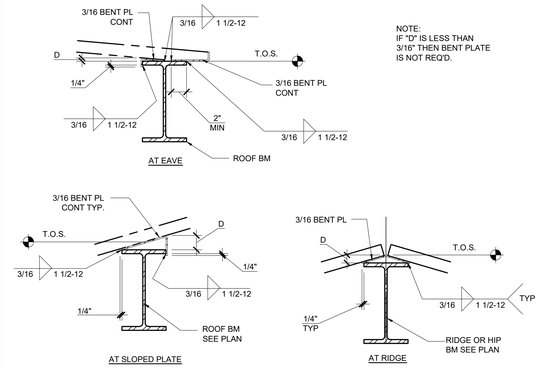

15 TYP SLOPED DECK TO BEAM DETAIL
NTS

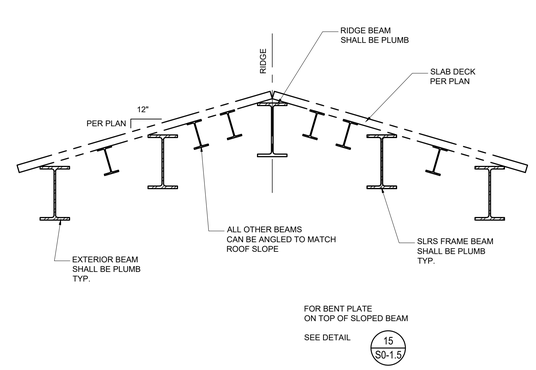

16 DETAIL
NTS

IDENTIFICATION STAMP
DIV. OF THE STATE ARCHITECT
APP. 03-119458 INC:
REVIEWED FOR
SS ☑ FLS ☑ ACS ☑
DATE:05/23/2019

DIVISION OF STATE ARCHITECT
355 South Grand Avenue, Suite 2100
Los Angeles, California. 90012
ph: (213) 897-3995 Fax: (213) 897-3159
agency

tBP architecture planning interiors
tBP/Architecture
4611 Teller Avenue
Newport Beach, CA 92660
ph: 949.673.0300 fx: 949.732.3895
architect

VCA ENGINEERS INC
2151 Michelson Dr. #240
Irvine, CA 92612
Tel. 949.679.0870
Fax. 949.679.9370
Project No.: E358
No. S4029 Exp. 9/30/20
consultant

COMPTON COLLEGE
INSTRUCTIONAL BUILDING No. 2

COMPTON COMMUNITY COLLEGE DISTRICT
1111 E. ARTESIA BLVD. COMPTON, CA.

owner

tBP project number : 20998.00
file name:
drawn by: checked by:
date: 04/08/19

Rev:	date:	description:

THIS DRAWING AND THE DESIGNS, DEPICTIONS, IDEAS AND OTHER INFORMATION CONTAINED HEREIN CONSTITUTE UNPUBLISHED WORK OF tBP/ARCHITECTURE AND SHALL REMAIN THE PROPERTY OF tBP/ARCHITECTURE IN PERPETUITY. NO PART THEREOF SHALL BE REPRODUCED, DISCLOSED, DISTRIBUTED, SOLD, PUBLISHED OR OTHERWISE USED IN ANY WAY WITHOUT THE ADVANCED EXPRESS WRITTEN CONSENT OF tBP/ARCHITECTURE.

drawing title:
TYPICAL DETAILS

drawing no.:
S0-1.5
drawing of

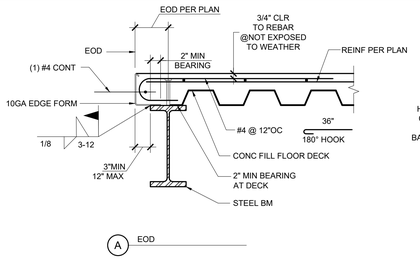

A EOD

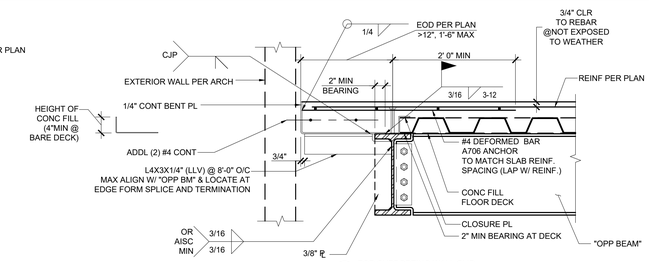

D EOD SUPPORTING WALL CLIP

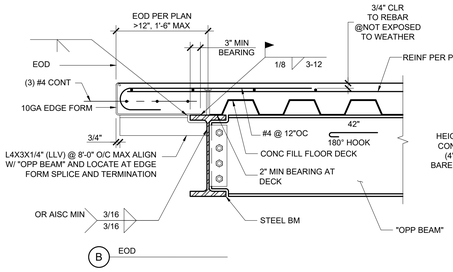

B EOD

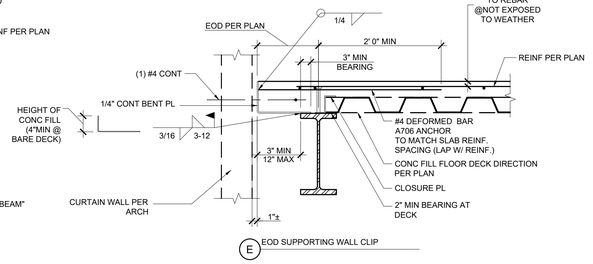

E EOD SUPPORTING WALL CLIP

DECK PARALLEL

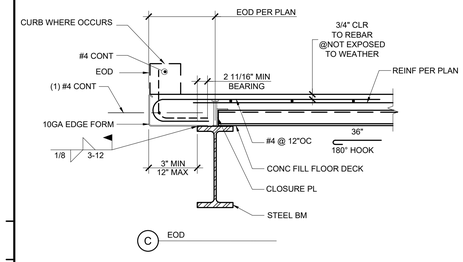

C EOD

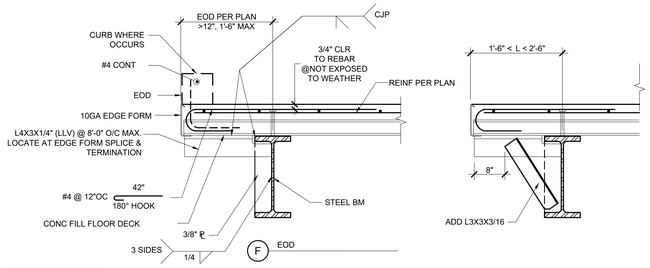

F EOD

DECK PERPENDICULAR

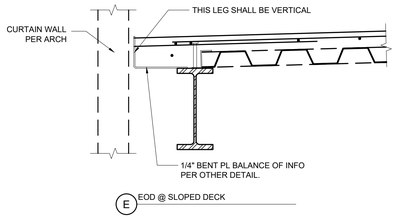

E EOD @ SLOPED DECK

NOTE:
DO NOT USE (A) (B) (C) (F) WHERE CURTAIN WALL OR EXTERIOR STUD WALL ARE ATTACHED TO DECK EDGE.

5 EDGE OF CONCRETE FILL DECK (EOD) AT FLOOR/ROOF
NTS

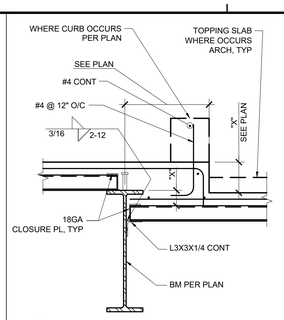

A WHERE "X" IS LARGER THAN 3"

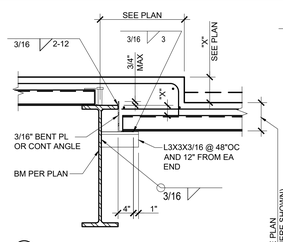

B WHERE "X" IS 3" OR SMALLER

TYPICAL SLAB DEPRESSION DECK PERPENDICULAR TO SUPPORT

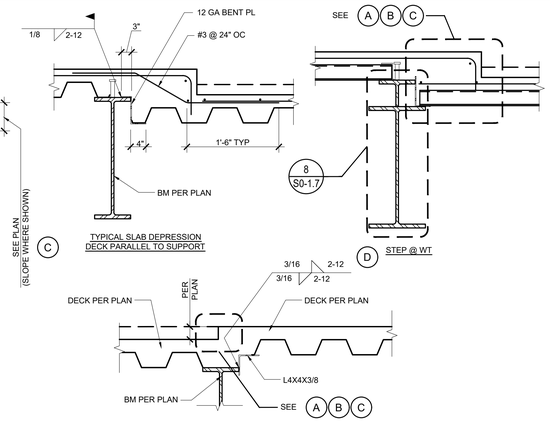

C TYPICAL SLAB DEPRESSION DECK PARALLEL TO SUPPORT

D STEP @ WT

3 TYPICAL STEPPED SLAB
NTS

7 DETAIL
NTS

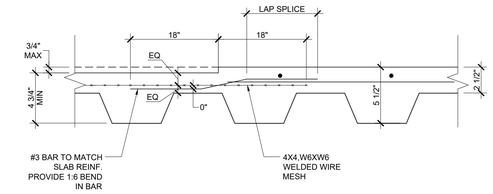

8 DETAIL @ WALK-OFF MAT
NTS

11 DETAIL
NTS

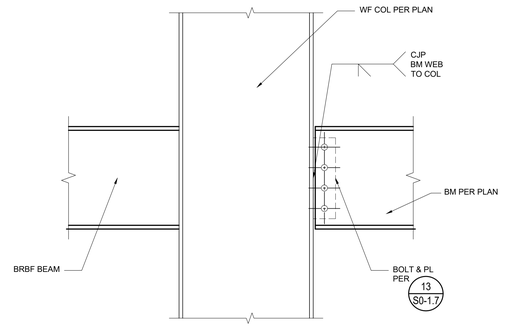

12 DETAIL
NTS

13 DETAIL
NTS

14 DETAIL
NTS

15 DETAIL
NTS

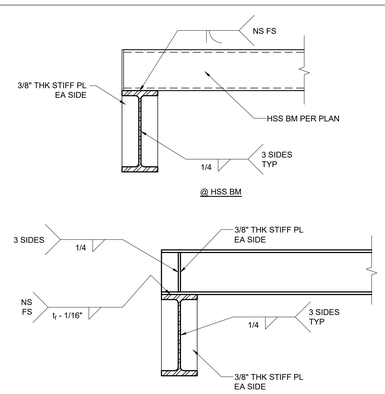

16 DETAIL
NTS

IDENTIFICATION STAMP
DIV. OF THE STATE ARCHITECT
APP. 03-119458 INC:
REVIEWED FOR
SS ☑ FLS ☑ ACS ☑
DATE:05/23/2019

DIVISION OF STATE ARCHITECT
355 South Grand Avenue, Suite 2100
Los Angeles, California. 90012
ph: (213) 897-3995 Fax: (213) 897-3159
agency

tBP architecture planning interiors

tBP/Architecture
4611 Teller Avenue
Newport Beach, CA 92660
ph: 949.673.0300 fx: 949.732.3895
architect

VCA ENGINEERS INC
2151 Michelson Dr. #240
Irvine, CA 92612
Tel. 949.679.0870
Fax. 949.679.9370
Project No.: E358
No. S4029 Exp. 9/30/20
consultant

COMPTON COLLEGE
INSTRUCTIONAL BUILDING No. 2
COMPTON COMMUNITY COLLEGE DISTRICT
1111 E. ARTESIA BLVD. COMPTON, CA.
owner

tBP project number : 20998.00
file name:
drawn by: checked by:
date: 04/08/19

Rev:	date:	description:

THIS DRAWING AND THE DESIGNS, DEPICTIONS, IDEAS AND OTHER INFORMATION CONTAINED HEREIN CONSTITUTE UNPUBLISHED WORK OF tBP/ARCHITECTURE AND SHALL REMAIN THE PROPERTY OF tBP/ARCHITECTURE IN PERPETUITY. NO PART THEREOF SHALL BE REPRODUCED, DISCLOSED, DISTRIBUTED, SOLD, PUBLISHED OR OTHERWISE USED IN ANY WAY WITHOUT THE ADVANCED EXPRESS WRITTEN CONSENT OF tBP/ARCHITECTURE.

drawing title:
TYPICAL DETAILS

drawing no.:
S0-1.6
drawing of

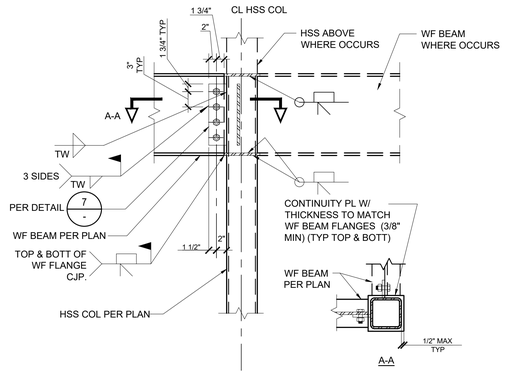

1 WF BEAM TO HSS COL. MOMENT CONNECTION
1" = 1'-0"

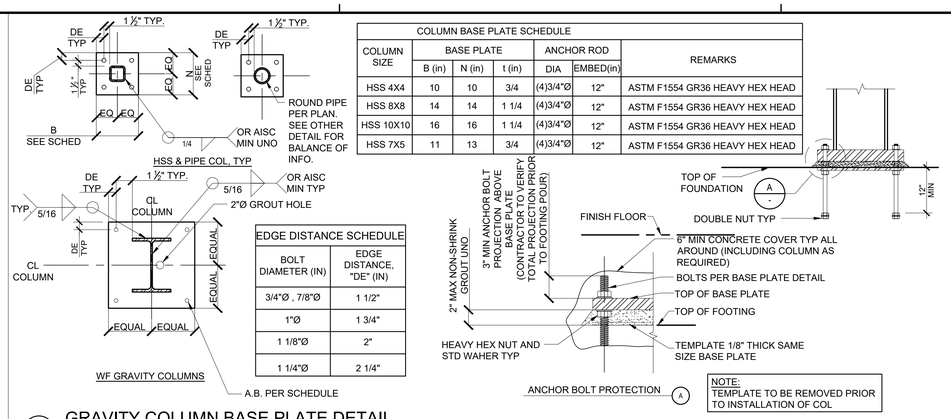

COLUMN BASE PLATE SCHEDULE						
COLUMN SIZE	BASE PLATE			ANCHOR ROD		REMARKS
	B (in)	N (in)	t (in)	DIA	EMBED(in)	
HSS 4X4	10	10	3/4	(4)3/4"Ø	12"	ASTM F1554 GR36 HEAVY HEX HEAD
HSS 8X8	14	14	1 1/4	(4)3/4"Ø	12"	ASTM F1554 GR36 HEAVY HEX HEAD
HSS 10X10	16	16	1 1/4	(4)3/4"Ø	12"	ASTM F1554 GR36 HEAVY HEX HEAD
HSS 7X5	11	13	3/4	(4)3/4"Ø	12"	ASTM F1554 GR36 HEAVY HEX HEAD

EDGE DISTANCE SCHEDULE	
BOLT DIAMETER (IN)	EDGE DISTANCE, "DE" (IN)
3/4"Ø , 7/8"Ø	1 1/2"
1"Ø	1 3/4"
1 1/8"Ø	2"
1 1/4"Ø	2 1/4"

2 GRAVITY COLUMN BASE PLATE DETAIL

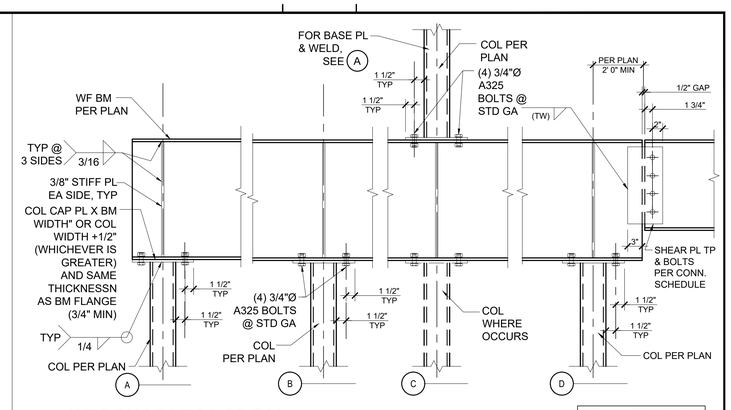

NOT ALL ITEMS SHOWN FOR CLARITY

4 WF BEAM TO TOP OF COL
1" = 1'-0"

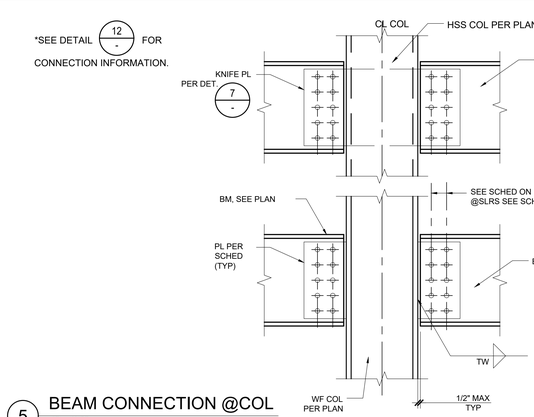

5 BEAM CONNECTION @COL
1" = 1'-0"

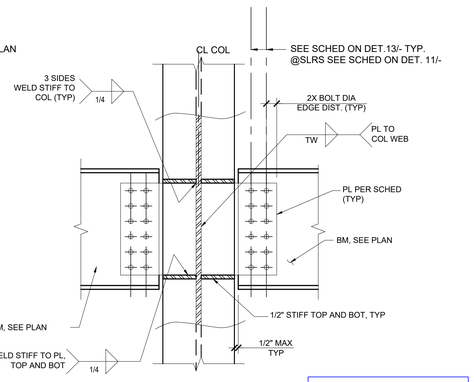

DETAIL IS APPLICABLE TO A SKEW UP TO 30 DEGREES.

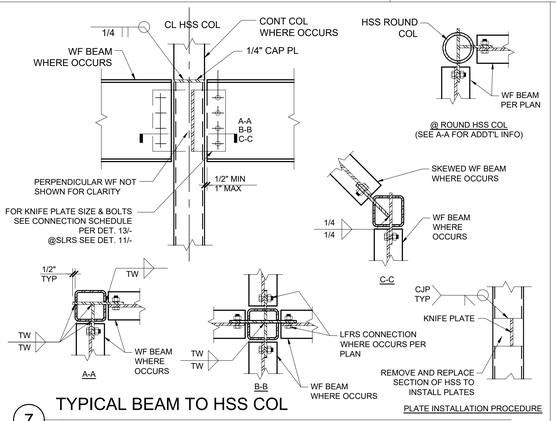

7 TYPICAL BEAM TO HSS COL
1" = 1'-0"

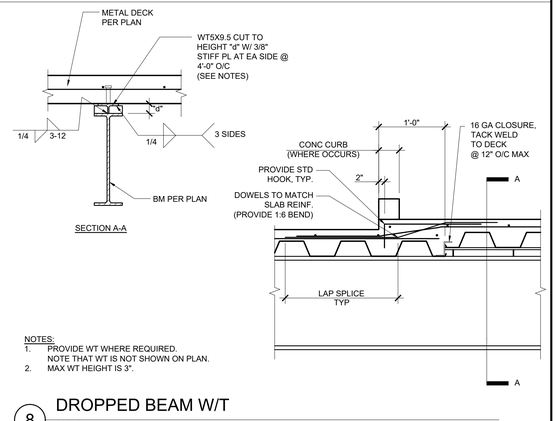

NOTES:
1. PROVIDE WT WHERE REQUIRED. NOTE THAT WT IS NOT SHOWN ON PLAN.
2. MAX WT HEIGHT IS 3".

8 DROPPED BEAM W/T
N.T.S.

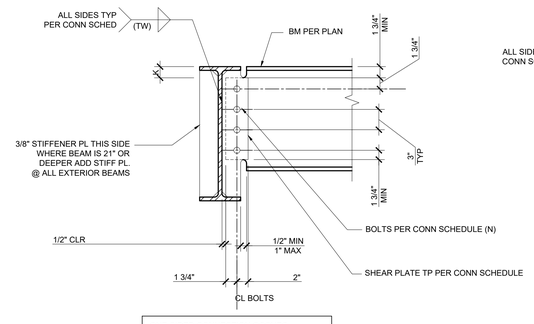

ONE-SIDED CONNECTION OCCURS WHERE OPPOSITE BEAMS ARE OFFSET BY 12" OR MORE

NOTE:
1. USE STANDARD BOLT HOLES

BEAM ONE SIDE

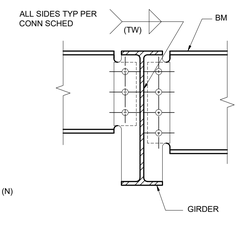

FOR ITEMS NOT SHOWN OR NOTED SEE "BEAM ONE SIDE"

BEAM EACH SIDE

TYP WF BEAM TO WF BEAM

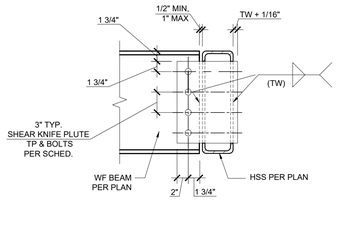

BEAM ONE SIDE @ HSS

WF BM & GIRDER CONNECTION SCHEDULE				
WF BM	(N) A325N BOLTS UNO	(L) MIN PLATE / WELD LENGTH	(TP) MIN PLATE THICKNESS	(TW) [1] MIN WELD THICKNESS
W8	(2) 3/4"Ø	5 1/2"	3/8"	1/4"
W10	(2) 3/4"Ø	6"	3/8"	1/4"
W12	(3) 1"Ø	9"	3/8"	1/4"
W14	(3) 1"Ø	9"	3/8"	1/4"
W16	(4) 1"Ø	12"	3/8"	1/4"
W18	(5) 1"Ø	15"	1/2"[2]	3/8"
W21,24	(6) 1"Ø	18"	1/2"[2]	3/8"
W27	(7) 1"Ø	21"	1/2"[2]	3/8"
W30	(8) 1"Ø	24"	1/2"[2]	3/8"
W33	(9) 1"Ø	27"	1/2"[2]	3/8"
W36	(10) 1"Ø	31"	1/2"[2]	3/8"

NOTES:
1. 5/16" MIN FOR COLUMN FLANGES GREATER THAN 3/4" THICK
2. PL 1/2" & THICKER SHALL BE GAS OR SAW CUT
3. ALL BOLT HOLES SHALL BE STD HOLES UNO.

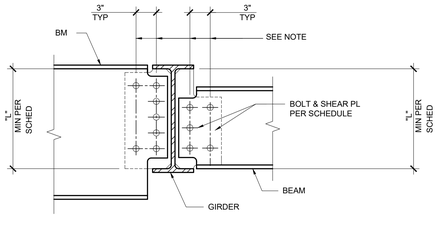

DROP BEAM OR DEEPER BEAM THAN GIRDER CONNECTION

NOTE:
WHERE NUMBER OF REQUIRED BOLTS PER PLAN OR SCHEDULE ARE MORE THAN NUMBER OF BOLTS THAT FIT AT ONE ROW, USE MAXIMUM BOLTS AT FIRST ROW & BALANCE IN SECOND ROW (2 BOLTS MIN AT SECOND ROW).

13 TYPICAL BEAM TO COLUMN AND BEAM TO BEAM CONNECTION
1" = 1'-0"

DRAG STRUT CONNECTION SCHEDULE				
MEMBER	CONN. PL THICKNESS "t" U.N.O.	# OF BOLTS A490 - SC PER ROW	NO. OF ROWS	WELD SIZE TW
W12-14	1/2"	3 - 1" DIA	SEE PLAN	3/8"
W16	3/4"	4 - 1" DIA		1/2"
W18	3/4"	5 - 1" DIA		1/2"
W21	7/8"	6 - 1" DIA		1/2"
W24	1"	6 - 1" DIA		3/4"
W27	1"	7 - 1" DIA		3/4"

NOTES:
1. FILLET WELDS INDICATED PER SCHEDULE SHALL BE REPLACED WITH COMPLETE PENETRATION GROOVE WELDS WHERE SKEWED BEAM CONNECTIONS WITH ANGLES SMALLER THAN 60° (BETWEEN BEAM AND GIRDER) OCCUR, TYP. U.N.O.
2. INSTALLATION OF HIGH STRENGTH BOLTS SHALL BE TESTED BY USING CALIBRATED WRENCH AS PER AISC SPECIFICATIONS. WRENCH SHALL BE CALIBRATED AT LEAST TWICE A DAY

11 DRAG STRUT CONNECTION SCHEDULE
1" = 1'-0"

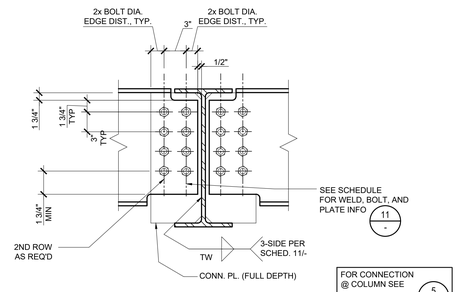

DRAG STRUT CONNECTION

12 DRAG STRUT CONNECTION AT GIRDER
1" = 1'-0"

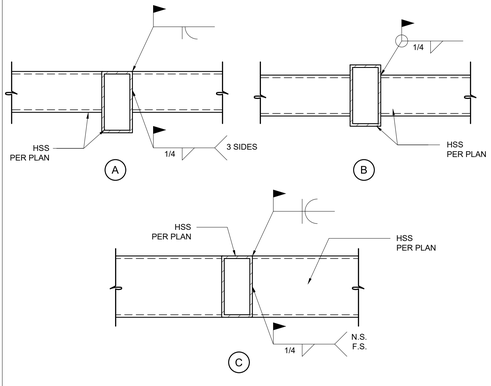

15 HSS TO HSS CONNECTION
1" = 1'-0"

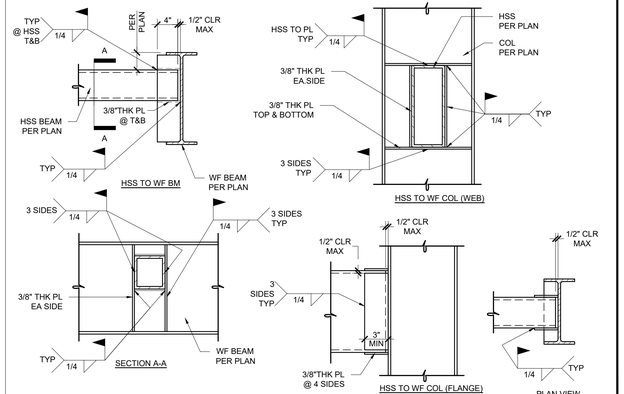

16 HSS BEAM TO WF BEAM CONNECTION
1" = 1'-0"

IDENTIFICATION STAMP
DIV. OF THE STATE ARCHITECT
APP. 03-119458 INC:
REVIEWED FOR
SS ☑ FLS ☑ ACS ☑
DATE:05/23/2019

DIVISION OF STATE ARCHITECT
355 South Grand Avenue, Suite 2100
Los Angeles, California. 90012
ph: (213) 897-3995 Fax: (213) 897-3159
agency

tBP architecture planning interiors

tBP/Architecture
4611 Teller Avenue
Newport Beach, CA 92660
ph: 949.673.0300 fx: 949.732.3895
architect

VCA ENGINEERS INC
2151 Michelson Dr. #240
Irvine, CA 92612
Tel. 949.679.0870
Fax. 949.679.9370
Project No.: E358
No. S4029 Exp. 9/30/20
consultant

COMPTON COLLEGE
INSTRUCTIONAL BUILDING No. 2
COMPTON COMMUNITY COLLEGE DISTRICT
1111 E. ARTESIA BLVD. COMPTON, CA.

owner

tBP project number : 20998.00
file name:
drawn by: checked by:
date: 04/08/19

Rev:	date:	description:

THIS DRAWING AND THE DESIGNS, DEPICTIONS, IDEAS AND OTHER INFORMATION CONTAINED HEREIN CONSTITUTE UNPUBLISHED WORK OF tBP/ARCHITECTURE AND SHALL REMAIN THE PROPERTY OF tBP/ARCHITECTURE IN PERPETUITY. NO PART THEREOF SHALL BE REPRODUCED, DISCLOSED, DISTRIBUTED, SOLD, PUBLISHED OR OTHERWISE USED IN ANY WAY WITHOUT THE ADVANCED EXPRESS WRITTEN CONSENT OF tBP/ARCHITECTURE.

drawing title:
TYPICAL DETAILS

drawing no.:
S0-1.7
drawing of

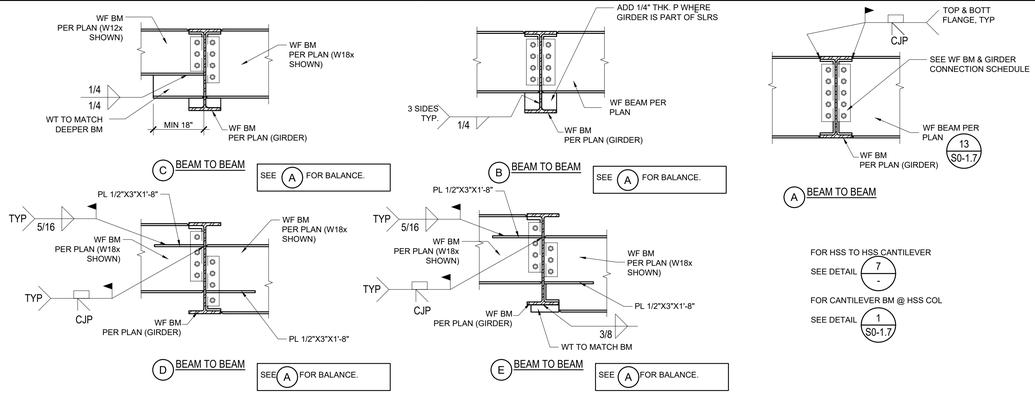

1 TYPICAL CANTILEVER BEAM CONNECTION
3/4" = 1'-0"

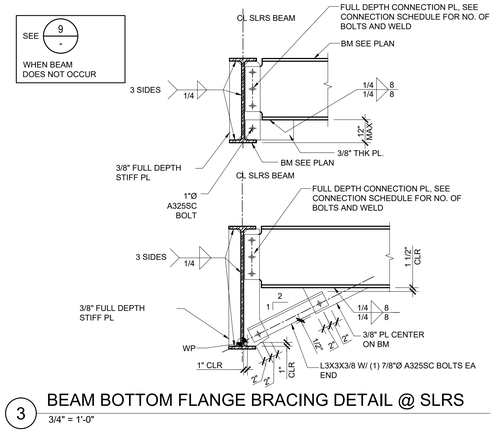

3 BEAM BOTTOM FLANGE BRACING DETAIL @ SLRS
3/4" = 1'-0"

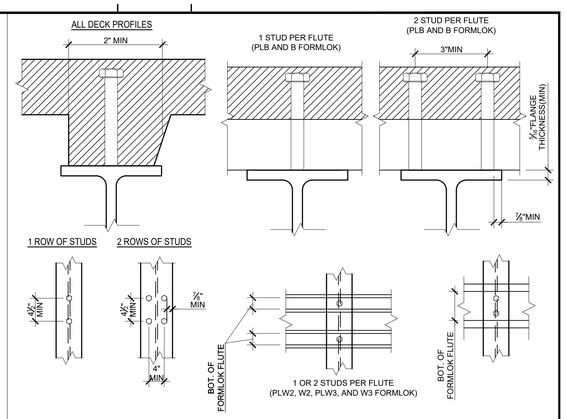

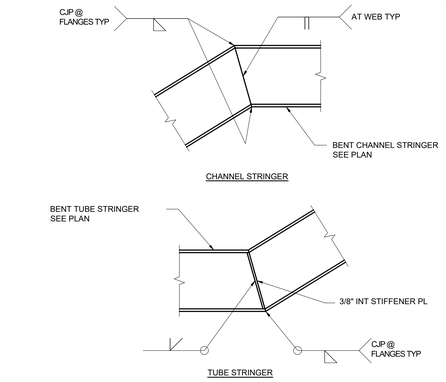

5 TYPICAL BENT STRINGERS
1" = 1'-0"

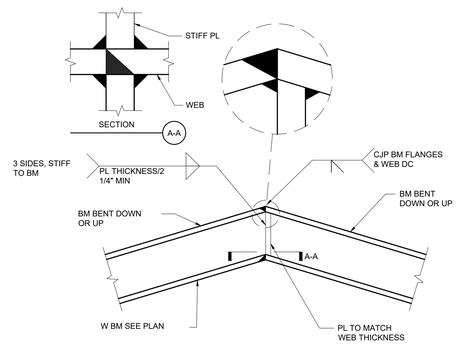

6 TYPICAL BENT BEAM
1" = 1'-0"

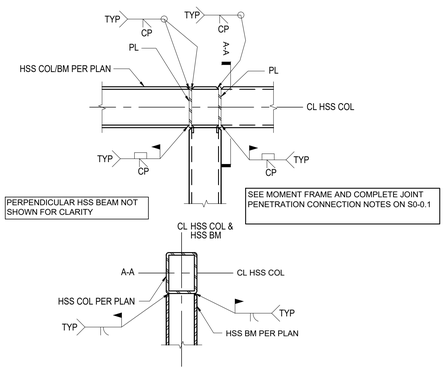

7 TYPICAL HSS MOMENT CONNECTION
NTS

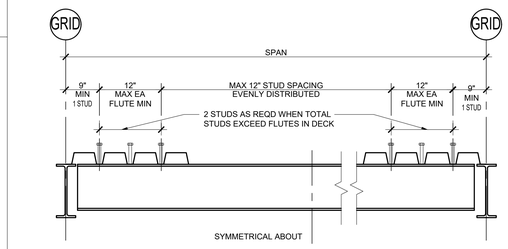

NOTES:
1. ALL WELDED STUDS SHALL BE 3/4"Ø x AS REQUIRED.
2. SPACE STUDS EVENLY ALONG LENGTH OF SPAN @ 12" (MAX) CENTERS.
3. DISTRIBUTE REMAINDER OF STUDS SYMMETRICAL FROM EACH END WITH ONE STUD EACH FLUTE, OR AT 6" O.C.
4. WHERE DECKING IS PARALLEL TO BEAM, DISTRIBUTE STUDS SYMMETRICALLY IN SIMILAR MANNER TO THAT SHOWN AND NOTED IN DETAIL ABOVE.
5. CUT DECKING AND PROVIDE GAP AS REQUIRED TO MAINTAIN STUD CENTERING. (ADD 16 GA. (MIN) CLOSURES AS REQUIRED).

8 WELDED STUDS
1" = 1'-0"

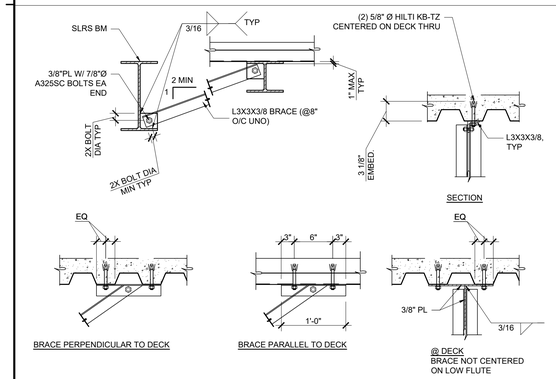

9 BEAM BOTTOM FLANGE BRACE DETAILS
1" = 1'-0"

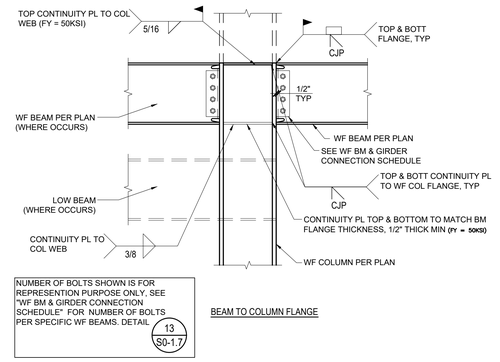

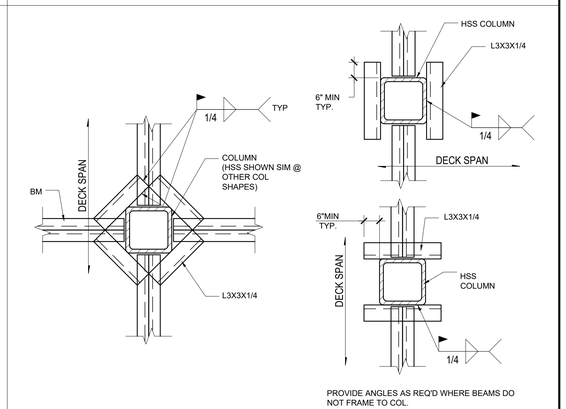

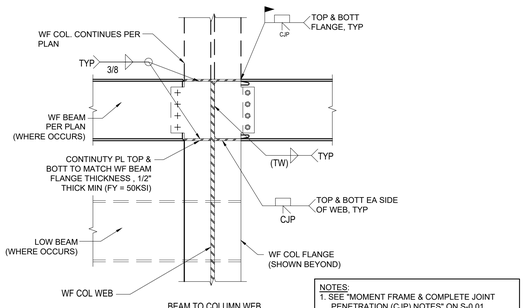

NOTES:
1. SEE "MOMENT FRAME & COMPLETE JOINT PENETRATION (CJP) NOTES" ON S-0.01
2. FOR B.U. BAR SEE 2 S0-1.9
3. FOR WELD ACCESS HOLE SEE 3 S0-1.9

15 TYP CANTILEVER / MOMENT BEAM CONNECTION
NTS

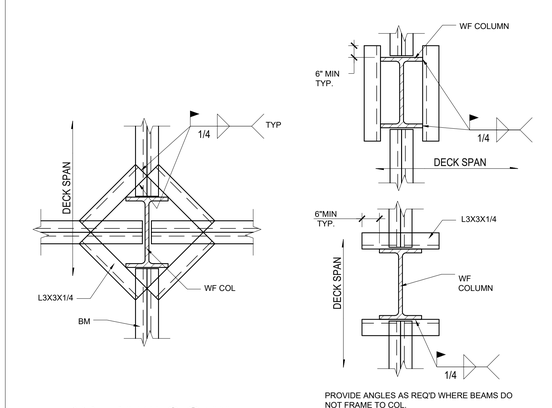

16 TYP FRAMING @ WALL
NTS

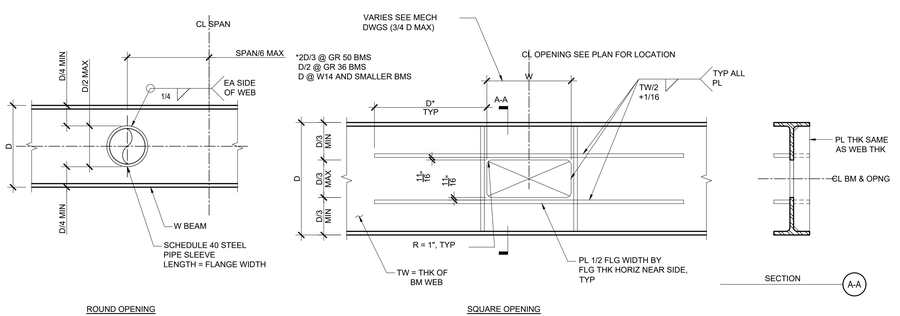

NOTES:
1. THIS DETAIL MAY NOT BE USED WITHOUT PRIOR WRITTEN APPROVAL OF SEOR.
2. CONTINUITY PLATES AND STIFFENERS SHALL BE 1/2 FLANGE WIDTH; GRADE SHALL MATCH BASE BEAM.
3. FLANGE & STIFFENER NOT REQD FOR 4" SQ HOLES & LESS IN W12 OR DEEPER.
4. WHERE ROUND OPENINGS ARE D/6 OR LESS, REINFORCING SHOWN IS NOT REQUIRED.

13 TYPICAL HOLE THRU STEEL BEAM WEB
NTS

IDENTIFICATION STAMP
DIV. OF THE STATE ARCHITECT
APP. 03-119458 INC:
REVIEWED FOR
SS ☑ FLS ☑ ACS ☑
DATE:05/23/2019

DIVISION OF STATE ARCHITECT
355 South Grand Avenue, Suite 2100
Los Angeles, California. 90012
ph: (213) 897-3995 Fax: (213) 897-3159
agency

tBP
architecture
planning
interiors
tBP/Architecture
4611 Teller Avenue
Newport Beach, CA 92660
ph: 949.673.0300 fx: 949.732.3895
architect

VCA ENGINEERS INC
2151 Michelson Dr. #240
Irvine, CA 92612
Tel. 949.679.0870
Fax. 949.679.9370
Project No.: E358
No. S4029
Exp. 9/30/20
consultant

COMPTON COLLEGE
INSTRUCTIONAL BUILDING No. 2

COMPTON COMMUNITY COLLEGE DISTRICT
1111 E. ARTESIA BLVD. COMPTON, CA.

owner

tBP project number : 20998.00
file name:
drawn by: checked by:
date: 04/08/19

Rev:	date:	description:

THIS DRAWING AND THE DESIGNS, DEPICTIONS, IDEAS AND OTHER INFORMATION CONTAINED HEREIN CONSTITUTE UNPUBLISHED WORK OF tBP/ARCHITECTURE AND SHALL REMAIN THE PROPERTY OF tBP/ARCHITECTURE IN PERPETUITY. NO PART THEREOF SHALL BE APPROPRIATED, DISCLOSED, DISTRIBUTED, SOLD, PUBLISHED OR OTHERWISE USED IN ANY WAY WITHOUT THE ADVANCED EXPRESS WRITTEN CONSENT OF tBP/ARCHITECTURE.

drawing title:
TYPICAL DETAILS

drawing no.:
S0-1.8
drawing of

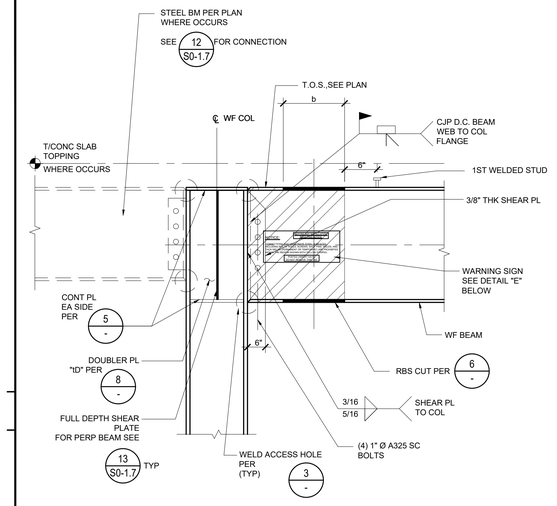

A ONE BEAM ROOF

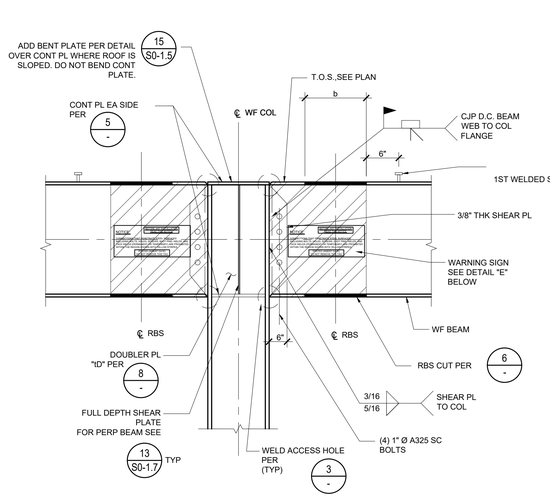

B TWO BEAM ROOF

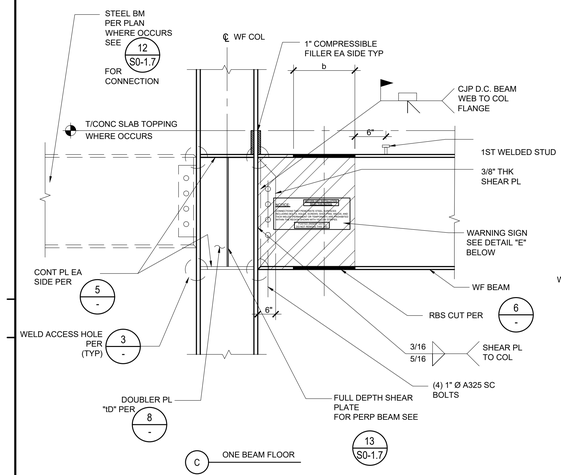

C ONE BEAM FLOOR

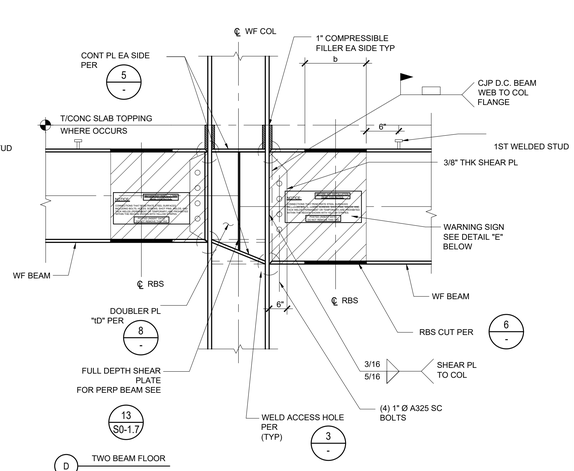

D TWO BEAM FLOOR

NOTES:
1. PERPENDICULAR FRAMING NOT SHOWN FOR CLARITY.
2. FOR WELD AND PLATE SIZES NOTED SEE 8 -
3. CONNECTIONS SHOWN THUS: ↦ ON PLAN & ELEVATION.
4. PROVIDE SLOPED CONTINUITY PLATES WHEN BEAMS ON BOTH SIDES OF COLUMN HAVE NOMINAL DEPTHS DIFFERENCE OF LESS THAN OR EQUAL TO 3 INCHES. OTHERWISE, PROVIDE 2 (PAIRS) OF CONTINUITY PLATES AS SHOWN IN DASH LINES IN SECTION
5. CJP WELDS OF BEAM FLANGES AND BEAM WEBS TO COLUMNS SHALL BE DEMAND CRITICAL WELDS PER AISC 341-10 E3.6
6. AT WELDING IN THE K AREA, TEST WEB FOR CRACKS USING MAGNETIC PARTICLE TESTING (MT). THE MT INSPECTION AREA SHALL INCLUDE THE K-AREA BASE METAL WITHIN 3" OF THE WELD. REF, AISC 341-10 J6.2A.
7. NON-DESTRUCTIVE TESTING (NDT) FOR SMF CONNECTIONS: SHALL BE PROVIDED FOR ALL CJP WELDED CONNECTION, K-AREA WELDS, ETC PER AISC 341-10 J6.2 IN ADDITION TO AISC 360-10 N5.5, AND PER DSA IR 17-2 QA REQUIREMENTS.
8. SEE S0-0.2 FOR ADDITIONAL TESTING AND INSPECTION NOTES.
9. PROTECTED ZONE SHALL BE SPRAYED WITH YELLOW STRIPS AND LOCATE WARNING SIGN SHOWN IN DETAIL "E".
10. PROTECTED ZONE SHALL BE PERMANENTLY MARKED AND MAINTAINED.

1 SMRF BEAM TO COLUMN FLANGE MOMENT CONNECTION
1" = 1'-0"

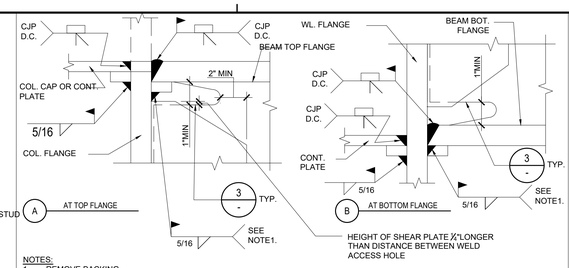

NOTES:
1. REMOVE BACKING
   THE ROOT PASS SHALL BE BACKGOUGED TO SOUND WELD METAL AND BACKWELDED WITH A REINFORCING FILLET.(MIN.5/16")
2. WHERE STEEL BACK IS USED AT THE CONTINUITY PLATE, THE BACKING NEED NOT TO BE REMOVED, BUT FOR BACKING LEFT IN PLACE SHALL BE ATTACHED TO COLUMN FLANGE WITH A 3/16" FILLET WELD BELOW THE CJP WELD (CONT PLATE TO COLUMN FLANGE, NON DC WELD PER AISC 341 E4.6F)EDGE. (AISC 358-10 3.3.1)
3. CJP WELDS OF BEAM FLANGES AND BEAM WEBS TO COLUMNS SHALL BE DEMAND CRITICAL WELDS PER AISC 341-10 E3.6
4. AT WELDING IN THE K AREA, TEST WEB FOR CRACKS USING MAGNETIC PARTICLE TESTING (MT). THE MT INSPECTION AREA SHALL INCLUDE THE K-AREA BASE METAL WITHIN 3" OF THE WELD. REF, AISC 341-10 J6.2A.
5. NON-DESTRUCTIVE TESTING (NDT) FOR SMF CONNECTIONS: SHALL BE PROVIDED FOR ALL CJP WELDED CONNECTION, K-AREA WELDS, ETC PER AISC 341-10 J6.2 IN ADDITION TO AISC 360-10 N5.5, AND PER DSA IR 17-2 QA REQUIREMENTS.

2 SMRF BEAM TO COL FLANGE WELDS
1" = 1'-0"

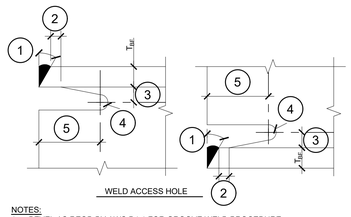

NOTES:
1. BEVEL AS REQD BY AWS D1.1 FOR GROOVE WELD PROCEDURE.
2. LARGER OF T_{BF} OR 1/2".
3. 3/4" T_{BF} TO T_{BF} 3/4" MIN.
4. 3/8" MIN RADIUS.
5. 3 T_{BF}.
6. WELD ACCESS HOLE: SHALL PER AISC 360-10 J1.6 PER 2/-.
7. SEE AWS D1.8 SECTION 6.10.2 FOR FABRICATION DETAILS INCLUDING CUTTING METHODS AND SMOOTHNESS REQUIREMENTS.
8. TOLERANCE SHALL NOT ACCUMULATE TO THE EXTEND THAT THE ANGLE OF THE ACCESS HOLE CUT TO THE FLANGE SURFACE EXCEEDS 25°

3 WELD ACCESS HOLE
1" = 1'-0"

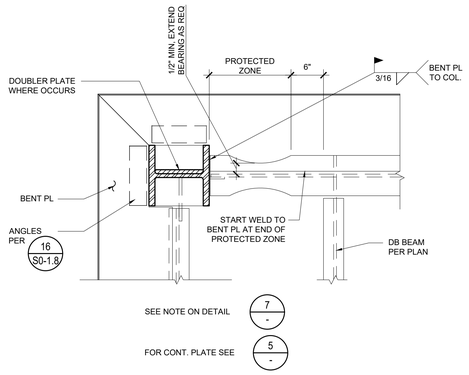

4 EDGE OF DECK AT SMRF BEAM
1" = 1'-0"

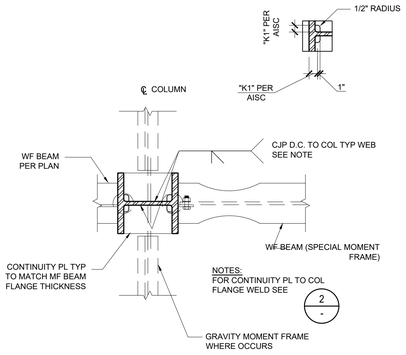

5 SMRF CONTINUITY PLATES
1" = 1'-0"

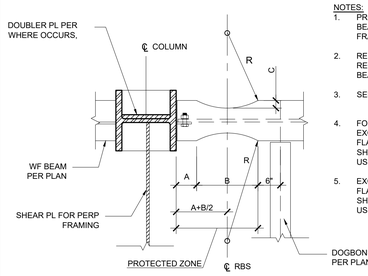

NOTES:
1. PROVIDE THIS DETAIL TO ALL MF BEAMS MARKED WITH ↦ ON FRAME ELEVATIONS SHOWN ON PLAN
2. REDUCED BEAM FLANGE IS NOT REQUIRED AT MF WIDE FLANGE BEAM CONNECTED TO HSS COLUMN
3. SEE RBS NOTES ON DETAIL 9 -
4. FOR ADDITIONAL INFORMATION EXCEPT FOR DECK TO TOP BEAM FLANGE PUDDLE WELD, NO WELD / SHORT PIN / SCREW SHALL BE USED IN PROTECTED ZONE.
5. EXCEPT FOR DECK TO TOP BEAM FLANGE PUDDLE WELD, NO WELD / SHORT PIN / SCREW SHALL BE USED IN PROTECTED ZONE.

RBS SCHEDULE				
BEAM SIZE	"A"	"B"	"C"	"R"
W18X55	4.71"	13.58"	1.32"	18.14"

6 SMRF RBS CONNECTION
1" = 1'-0"

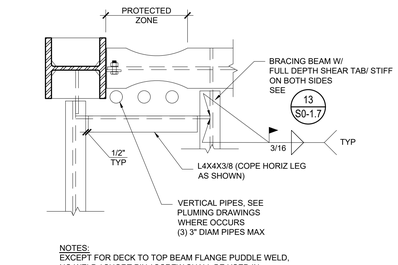

NOTES:
EXCEPT FOR DECK TO TOP BEAM FLANGE PUDDLE WELD, NO WELD / SHORT PIN / SCREW SHALL BE USED IN PROTECTED ZONE.

BRACING AND SUPPORT FOR OPENINGS ADJACENT TO SMRF BEAM

7
1" = 1'-0"

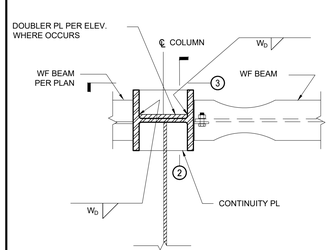

NOTES:
PROVIDE THIS DETAIL ONLY WHERE INDICATED ON FRAME ELEVATIONS.

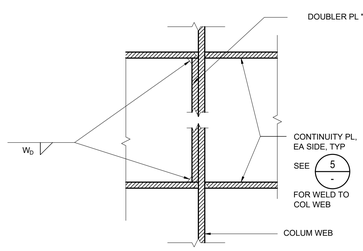

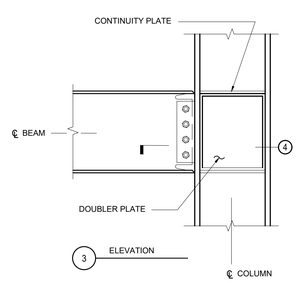

NOTES:
THIS DETAIL IS INTENDED TO ILLUSTRATE DOUBLER PLATE CONNECTION TO COLUMN. DOUBLER PLATE EXTEND BETWEEN THE TOP OF THE CONTINUITY PLATES.

(REFER TO COMMENTARY E3.6e OF AISC 341-10)

8 SMRF DOUBLER PLATES
1" = 1'-0"

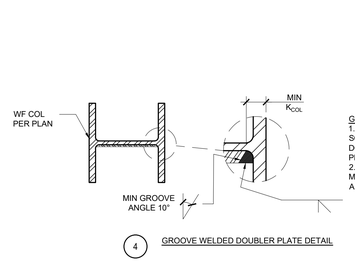

GROOVE WELDED NOTES:
1. A SQUARE-EDGE PLATE AND SQUARE GROOVE WELD BETWEEN DOUBLER PLATE AND COLUMN IS NOT PERMITTED
2. K-AREA SHALL BE INSPECTED BY MAGNETIC PARTICLE TESTING (MT) FOR ANY CRACK.

(REFER TO FIGURE C-E3.3 FROM AISC 341-10)

GROOVE WELDED DOUBLER PLATE DETAIL

4
1" = 1'-0"

HOLES AND ATTACHMENTS TO REDUCED BEAM SECTION (RBS):
1. NO HOLES MAY BE DRILLED OR PUNCHED IN EITHER FLANGE OF THE BEAM WITHIN THE LENGTH THAT HAS RECEIVED THE RADIUS CUT, OR BETWEEN THE RBS CUT AND THE COLUMN. SHEAR STUDS AND MECHANICAL DECK FASTENERS TO THE BEAM FLANGE WITHIN THE LENGTH OF THE RADIUS CUT ARE PROHIBITED. SPOT WELDS FOR THE ATTACHMENT OF METAL DECKING ARE PERMITTED.
2. RBS CUT TOLERANCES:
   THE TOLERANCE ON THE DEPTH OF EACH RBS CUT IS PLUS OR MINUS 1/4 INCH, MEASURED AT THE MID-THICKNESS OF THE FLANGE AT THE NARROWEST POINT OF THE CUT FLANGE. THE LENGTH OF THE CUT SHALL BE WITHIN PLUS OR MINUS 15% OF THE SPECIFIED LENGTH. THE DEPTH OF CUT ON EACH SIDE SHALL BE BALANCED, WITH NO MORE THAN 3/8 INCH TOTAL VARIATION IN THE DEPTH OF CUT FROM ONE SIDE TO THE OTHER. (EXAMPLE: PLUS 1/8 INCH ON ONE SIDE, MINUS 1/4 INCH ON OTHER SIDE) THE BALANCE OF REMAINING FLANGE WIDTH ABOUT THE WEB OF THE BEAM IS NOT A CONSIDERATION.
3. CUT SURFACE ROUGHNESS:
   AFTER THERMAL CUTTING, THE RBS SURFACE SHALL HAVE A SURFACE ROUGHNESS OF NO MORE THAN 500 MICROINCHES (AWS SAMPLE 3). GRINDING OF THERMALLY CUT EDGES SHALL BE PROVIDED ONLY AS NECESSARY TO MEET THIS CRITERIA. CORNERS BETWEEN THE CUT RBS SURFACE AND THE TOP AND BOTTOM OF THE FLANGES SHALL BE GROUND IN THE DIRECTION OF THE FLANGE LENGTH TO REMOVE SHARP EDGES, BUT A MINIMUM RADIUS CHAMFER IS NOT REQUIRED.
4. GOUGES AND NOTCHES:
   GOUGES AND NOTCHES THAT OCCUR IN THE THERMAL CUT RBS SURFACE MAY BE REPAIRED BY GRINDING IF NOT MORE THAN 1/4 INCH DEEP. THE GOUGED OR NOTCHED AREA SHALL BE FAIRED BY GRINDING SO THAT A SMOOTH TRANSITION EXISTS, AND THE TOTAL LENGTH OF THE AREA GROUND FOR THE TRANSITION SHALL BE NO LESS THAN 5 TIMES THE DEPTH OF THE REMOVED GOUGE. IF A SHARP NOTCH EXISTS, THE AREA SHALL BE INSPECTED BY MT AFTER GRINDING TO ENSURE THAT THE ENTIRE DEPTH OF GOUGE OR NOTCH HAS BEEN REMOVED. GRINDING MAY NOT INCREASE THE DEPTH OF THE RBS CUT SECTION MORE THAN 1/4 INCH BEYOND THE SPECIFIED DEPTH OF CUT.
5. WELDED REPAIR OF GOUGE AND NOTCHES:
   GOUGES AND NOTCHES THAT EXCEED 1/4 INCH IN DEPTH, BUT NOT TO EXCEED 1/2 INCH IN DEPTH, AND THOSE GOUGES AND NOTCHES WHERE REPAIR BY GRINDING WOULD INCREASE THE EFFECTIVE DEPTH OF THE RBS CUT BEYOND TOLERANCE, MAY BE REPAIRED BY WELDING. GOUGES AND NOTCHES EXCEEDING 1/2 INCH IN DEPTH MAY BE REPAIRED ONLY WITH THE APPROVAL OF THE STRUCTURAL ENGINEER. THE NOTCH OR GOUGE SHALL BE REMOVED AND GROUND TO PROVIDE A SMOOTH RADIUS OF NOT LESS THAN 1/4 INCH FOR WELDING. THE REPAIR AREA SHALL BE PREHEATED TO A TEMPERATURE OF 150°F (65°C) OR THE VALUE SPECIFIED IN AWS D1.1/D1.1M, WHICHEVER IS GREATER, MEASURED AT THE LOCATION OF THE WELD REPAIR. REPAIR WELDINGSHALL BE DONE WITH NOTCH-TOUGH ELECTRODES MEETING THE REQUIREMENTS PER AISC 358-10, SECTION 5.7. A REPAIR WPS IS REQUIRED. FOLLOWING WELDING, THE REPAIR WELD SHALL BE GROUND TO A SMOOTH CONTOUR MEETING THE RBS REQUIREMENTS, WITH A SURFACE ROUGHNESS NOT TO EXCEED 500 MICROINCHES. THE WELDED REPAIR AREA SHALL BE INSPECTED USING MAGNETIC PARTICLE TESTING.

9 RBS NOTES
1" = 1'-0"

IDENTIFICATION STAMP
DIV. OF THE STATE ARCHITECT
APP. 03-119458 INC:
REVIEWED FOR
SS ☑ FLS ☑ ACS ☑
DATE:05/23/2019

DIVISION OF STATE ARCHITECT
355 South Grand Avenue, Suite 2100
Los Angeles, California. 90012
ph: (213) 897-3995 Fax: (213) 897-3159
agency

tBP architecture planning interiors
tBP/Architecture
4611 Teller Avenue
Newport Beach, CA 92660
ph: 949.673.0300 fx: 949.732.3895
architect

VCA ENGINEERS INC
2151 Michelson Dr. #240
Irvine, CA 92612
Tel. 949.679.0870
Fax. 949.679.9370
Project No.: E358
No. S4029 Exp. 9/30/20
consultant

COMPTON COLLEGE
INSTRUCTIONAL BUILDING No. 2

COMPTON COMMUNITY COLLEGE DISTRICT
1111 E. ARTESIA BLVD. COMPTON, CA.

owner

tBP project number : 20998.00
file name:
drawn by: checked by:
date: 04/08/19

Rev:	date:	description:

THIS DRAWING AND THE DESIGNS, DEPICTIONS, IDEAS AND OTHER INFORMATION CONTAINED HEREIN CONSTITUTE UNPUBLISHED WORK BY tBP/ARCHITECTURE AND SHALL REMAIN THE PROPERTY OF tBP/ARCHITECTURE IN PERPETUITY. NO PART THEREOF SHALL BE REPRODUCED, DISCLOSED, DISTRIBUTED, SOLD, PUBLISHED OR OTHERWISE USED IN ANY WAY WITHOUT THE ADVANCED EXPRESS WRITTEN CONSENT OF tBP/ARCHITECTURE.

drawing title:
TYPICAL DETAILS

drawing no.:
S0-1.9
drawing of

1 DETAIL
NTS

2 DETAIL
NTS

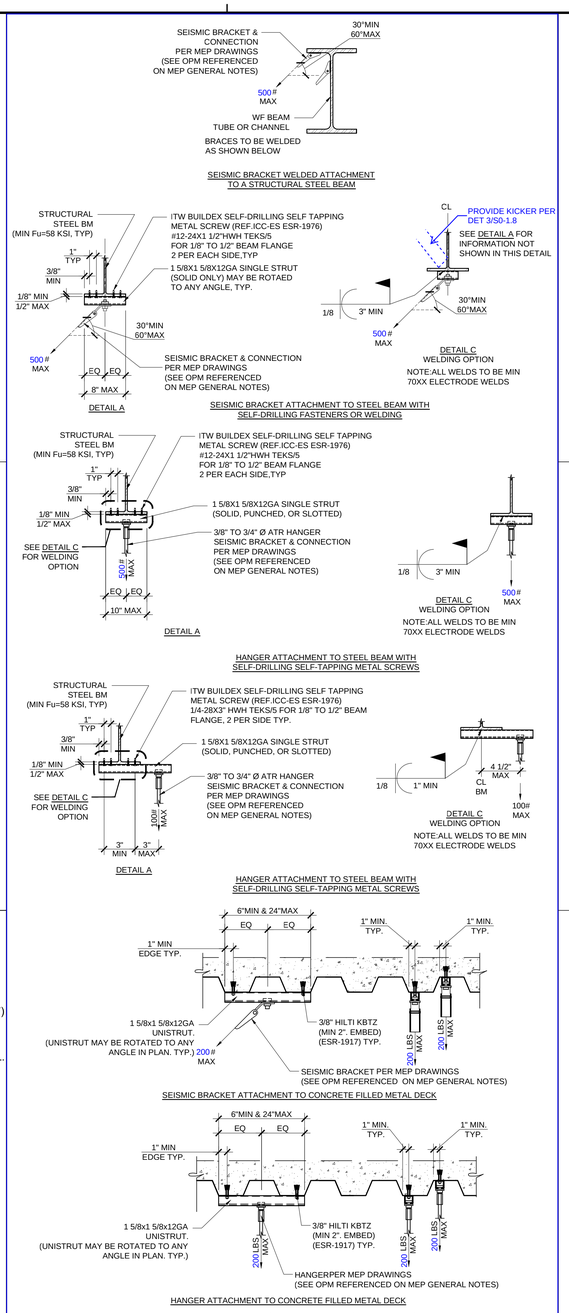

3
DETAIL
NTS

4 DETAIL
NTS

5 DETAIL
NTS

6 DETAIL
NTS

7
DETAIL
NTS

8 UNISTRUT TO METAL STUD CONNECTION
NTS

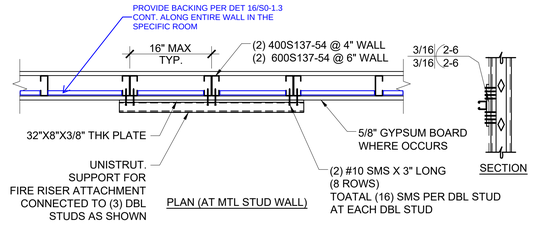

9 CONDENSING UNIT
NTS

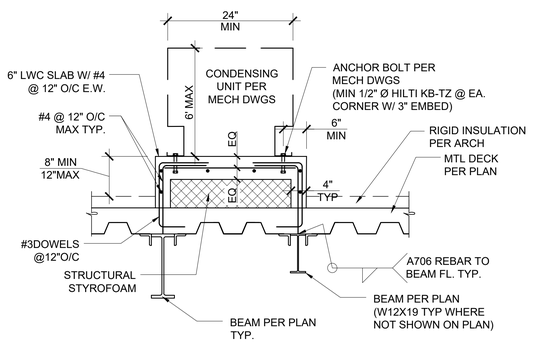

10 SECTION AT EQUIPMENT PAD
NTS

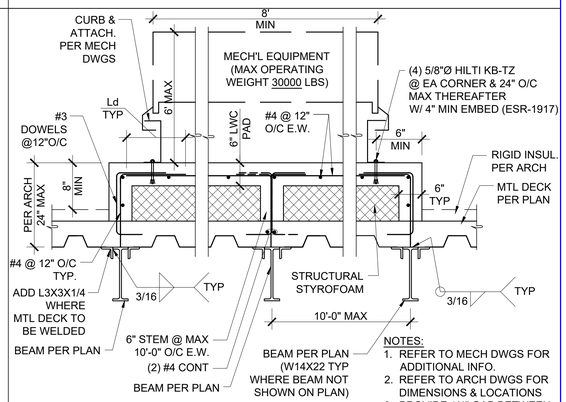

11 HANGER AND BRACE ATTACHMENT TO STRUCTURE
NTS

12 TYP EXHAUST FAN & INTAKE HOOD ANCHORAGE DETAIL
NTS

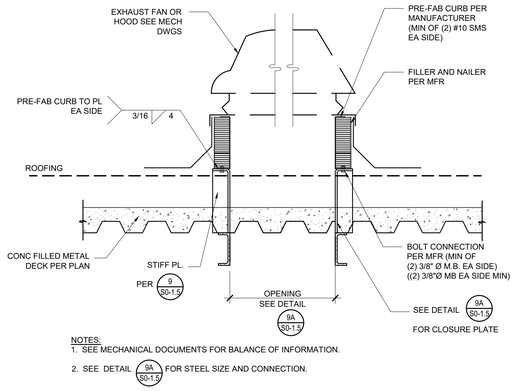

13 DETAIL
NTS

14 DETAIL
NTS

15 DETAIL
NTS

16 DETAIL
NTS

IDENTIFICATION STAMP
DIV. OF THE STATE ARCHITECT
APP. 03-119458 INC:
REVIEWED FOR
SS ☑ FLS ☑ ACS ☑
DATE:05/23/2019

DIVISION OF STATE ARCHITECT
355 South Grand Avenue, Suite 2100
Los Angeles, California. 90012
ph: (213) 897-3995 Fax: (213) 897-3159
agency

tBP
architecture
planning
interiors

tBP/Architecture
4611 Teller Avenue
Newport Beach, CA 92660
ph: 949.673.0300 fx: 949.732.3895
architect

VCA ENGINEERS INC
2151 Michelson Dr. #240
Irvine, CA 92612
Tel. 949.679.0870
Fax. 949.679.9370
Project No.: E358
consultant

COMPTON COLLEGE
INSTRUCTIONAL BUILDING No. 2

COMPTON COMMUNITY COLLEGE DISTRICT
1111 E. ARTESIA BLVD. COMPTON, CA.

owner

tBP project number : 20998.00
file name:
drawn by: checked by:
date: 04/08/19

Rev:	date:	description:

THIS DRAWING AND THE DESIGNS, DEPICTIONS, IDEAS AND OTHER INFORMATION CONTAINED HEREIN CONSTITUTE UNPUBLISHED WORK BY tBP/ARCHITECTURE AND SHALL REMAIN THE PROPERTY OF tBP/ARCHITECTURE IN PERPETUITY. NO PART THEREOF SHALL BE REPRODUCED, DISCLOSED, DISTRIBUTED, SOLD, PUBLISHED OR OTHERWISE USED IN ANY WAY WITHOUT THE ADVANCED EXPRESS WRITTEN CONSENT OF tBP/ARCHITECTURE.

drawing title:
TYPICAL DETAILS

drawing no.:
S0-1.10
drawing of

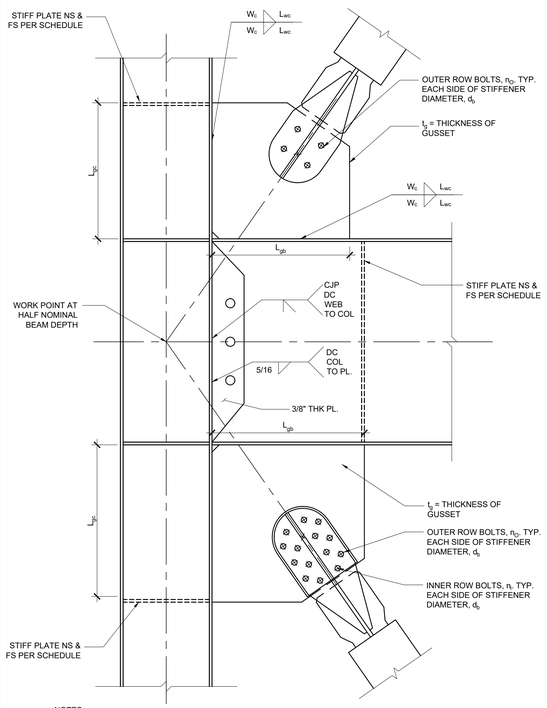

NOTES:
SEE SCHEDULE FOR THE FOLLOWING ITEMS(UNIQUE TO EACH BRACE):

1. Wb, Lwb: SIZE AND LENGTH OF GUSSET WELD TO BEAM/BASE PLATE AT "V" AND CHEVRON CONFIGURATIONS, REQUIRED AT EACH SIDE OF STIFFENER.
2. Wc, Lwc: SIZE AND LENGTH OF GUSSET WELD TO COLUMN PLATE AT "V" AND CHEVRON CONFIGURATIONS, REQUIRED AT EACH SIDE OF STIFFENER.
3. Lgb: APPROXIMATE WIDTH OF GUSSET. AT "V" OR CHEVRON CONFIGURATIONS APPROXIMATE WIDTH OF HALF GUSSET (FROM EDGE TO CL OF STIFFENER).
4. Lgc: APPROX. HEIGHT OF GUSSET.
5. tg: GUSSET THICKNESS.

5 BRB GUSSET DETAIL
NTS

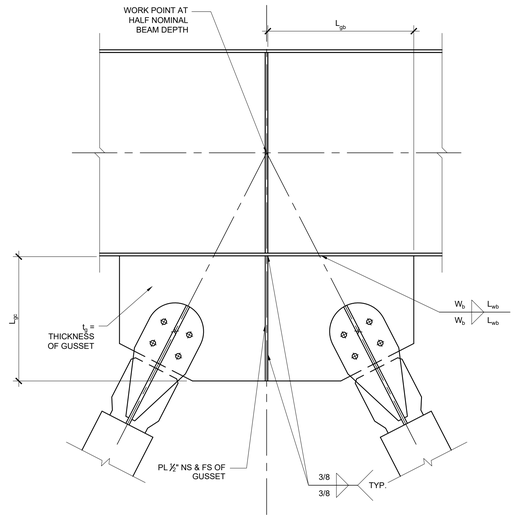

6 BRB CHEVRON
NTS

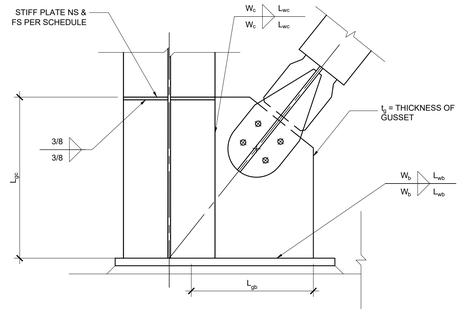

WEAK AXIS COLUMN

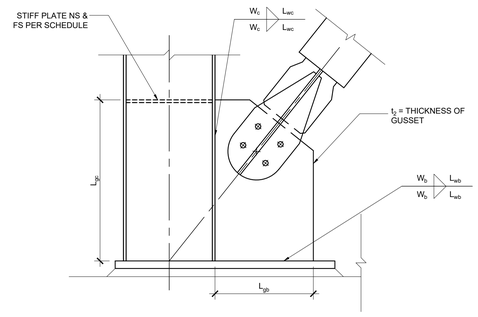

STRONG AXIS COLUMN

7 BRB AT FOUNDATION
NTS

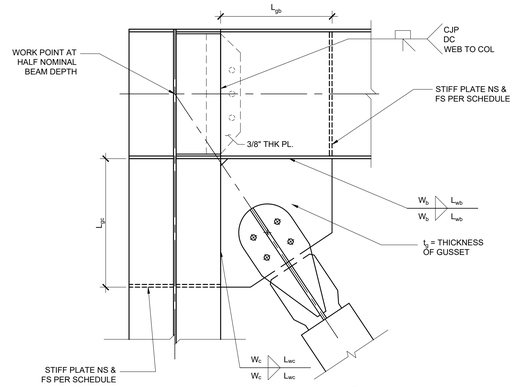

WEAK AXIS COLUMN (BALANCE OF INFO. PER 13/7)

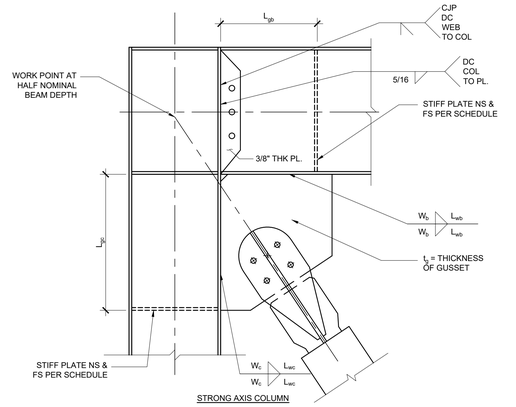

STRONG AXIS COLUMN

8 BRB AT ROOF
NTS

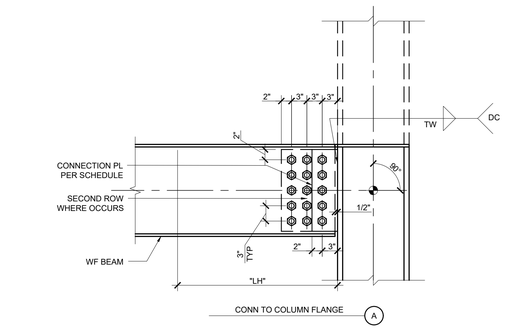

13 TYPICAL BRBF BEAM TO COLUMN
NTS

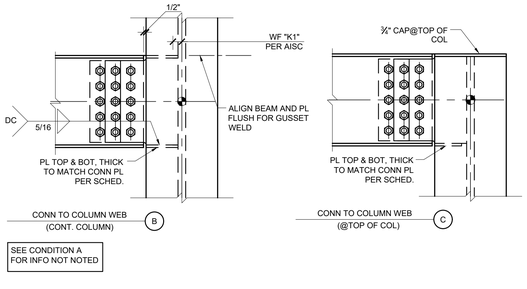

SEE CONDITION A FOR INFO NOT NOTED

BRBF BM CONN SCHEDULE					
BEAM SIZE	NO. 1"Ø A490-SC BOLTS 1ST ROW	2ND ROW	3RD ROW	CONN PL THICKNESS	WELD TW
W18X	4	4	4	1 1/4"	3/4"

NOTES

1. SPECIFY ERECTION PROCEDURES FOR FITTING AND WELDING OF THIS CONNECTION ON SHOP DRAWINGS.

10 DETAIL
NTS

11 DETAIL
NTS

12 DETAIL
NTS

14 DETAIL
NTS

15 DETAIL
NTS

16 DETAIL
NTS

IDENTIFICATION STAMP
DIV. OF THE STATE ARCHITECT
APP. 03-119458 INC:
REVIEWED FOR
SS ☑ FLS ☑ ACS ☑
DATE:05/23/2019

DIVISION OF STATE ARCHITECT
355 South Grand Avenue, Suite 2100
Los Angeles, California. 90012
ph: (213) 897-3995 Fax: (213) 897-3159
agency

tBP
architecture
planning
interiors

tBP/Architecture
4611 Teller Avenue
Newport Beach, CA 92660
ph: 949.673.0300 fx: 949.732.3895
architect

VCA ENGINEERS INC
2151 Michelson Dr. #240
Irvine, CA 92612
Tel. 949.679.0870
Fax. 949.679.9370
Project No.: E358
No. S4029 Exp. 9/30/20
consultant

COMPTON COLLEGE
INSTRUCTIONAL BUILDING No. 2
COMPTON COMMUNITY COLLEGE DISTRICT
1111 E. ARTESIA BLVD. COMPTON, CA.
owner

tBP project number : 20998.00
file name:
drawn by: checked by:
date: 04/08/19

Rev:	date:	description:

THIS DRAWING AND THE DESIGNS, DEPICTIONS, IDEAS AND OTHER INFORMATION CONTAINED HEREIN CONSTITUTE UNPUBLISHED WORK OF tBP/ARCHITECTURE AND SHALL REMAIN THE PROPERTY OF tBP/ARCHITECTURE IN PERPETUITY. NO PART THEREOF SHALL BE REPRODUCED, DISCLOSED, DISTRIBUTED, SOLD, PUBLISHED OR OTHERWISE USED IN ANY WAY WITHOUT THE ADVANCED EXPRESS WRITTEN CONSENT OF tBP/ARCHITECTURE.

drawing title:
TYPICAL DETAILS

drawing no.:
S0-1.11
drawing of

CoreBrace
SUPERIOR SEISMIC PERFORMANCE

5789 W.Wells Park Rd.
West Jordan,Utah 84081
(801) 280-0701

IDENTIFICATION STAMP
DIV. OF THE STATE ARCHITECT
APP. 03-119458 INC:
REVIEWED FOR
SS ☑ FLS ☑ ACS ☑
DATE:05/23/2019

DIVISION OF STATE ARCHITECT
355 South Grand Avenue, Suite 2100
Los Angeles, California. 90012
ph: (213) 897-3995 Fax: (213) 897-3159
agency

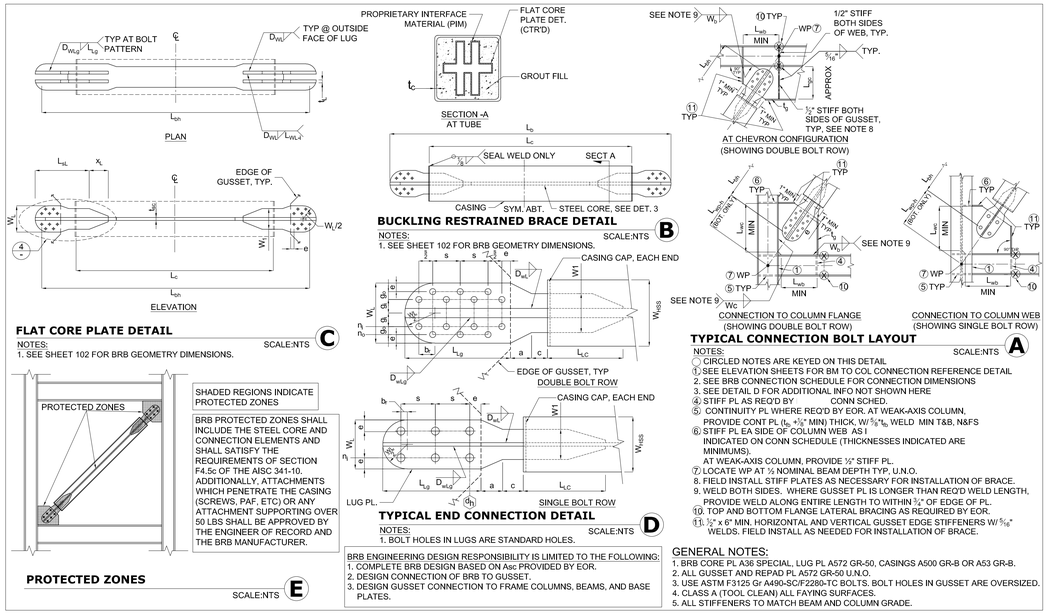

FLAT CORE PLATE DETAIL C

SCALE:NTS

NOTES:
1. SEE SHEET 102 FOR BRB GEOMETRY DIMENSIONS.

SHADED REGIONS INDICATE PROTECTED ZONES

BRB PROTECTED ZONES SHALL INCLUDE THE STEEL CORE AND CONNECTION ELEMENTS AND SHALL SATISFY THE REQUIREMENTS OF SECTION F4.5c OF THE AISC 341-10. ADDITIONALLY, ATTACHMENTS WHICH PENETRATE THE CASING (SCREWS, PAF, ETC) OR ANY ATTACHMENT SUPPORTING OVER 50 LBS SHALL BE APPROVED BY THE ENGINEER OF RECORD AND THE BRB MANUFACTURER.

PROTECTED ZONES E

SCALE:NTS

BUCKLING RESTRAINED BRACE DETAIL B

SCALE:NTS

NOTES:
1. SEE SHEET 102 FOR BRB GEOMETRY DIMENSIONS.

TYPICAL END CONNECTION DETAIL D

SCALE:NTS

NOTES:
1. BOLT HOLES IN LUGS ARE STANDARD HOLES.

BRB ENGINEERING DESIGN RESPONSIBILITY IS LIMITED TO THE FOLLOWING:
1. COMPLETE BRB DESIGN BASED ON Asc PROVIDED BY EOR.
2. DESIGN CONNECTION OF BRB TO GUSSET.
3. DESIGN GUSSET CONNECTION TO FRAME COLUMNS, BEAMS, AND BASE PLATES.

TYPICAL CONNECTION BLD LAYOUT A

SCALE:NTS

NOTES:
- CIRCLED NOTES ARE KEYED ON THIS DETAIL
1. SEE ELEVATION SHEETS FOR BM TO COL CONNECTION REFERENCE DETAIL
2. SEE BRB CONNECTION SCHEDULE FOR CONNECTION DIMENSIONS
3. SEE DETAIL D FOR ADDITIONAL INFO NOT SHOWN HERE
4. STIFF PL AS REQ'D BY CONN SCHED.
5. CONTINUITY PL WHERE REQ'D BY EOR. AT WEAK-AXIS COLUMN, PROVIDE CONT PL (t_b +⅜" MIN) THICK, W/ $\frac{5}{16}$"t_b WELD MIN T&B, N&S
6. STIFF PL EA SIDE OF COLUMN WEB AS I INDICATED ON CONN SCHEDULE (THICKNESSES INDICATED ARE MINIMUMS). AT WEAK-AXIS COLUMN, PROVIDE ½" STIFF PL.
7. LOCATE WP AT ½ NOMINAL BEAM DEPTH TYP. U.N.O.
8. FIELD INSTALL STIFF PLATES AS NECESSARY FOR INSTALLATION OF BRACE.
9. WELD BOTH SIDES. WHERE GUSSET PL IS LONGER THAN REQ'D WELD LENGTH, PROVIDE WELD ALONG ENTIRE LENGTH TO WITHIN ½" OF EDGE OF PL.
10. TOP AND BOTTOM FLANGE LATERAL BRACING AS REQUIRED BY EOR.
11. ½" x 6" MIN. HORIZONTAL AND VERTICAL GUSSET EDGE STIFFENERS W/ $\frac{5}{16}$" WELDS. FIELD INSTALL AS NEEDED FOR INSTALLATION OF BRACE.

GENERAL NOTES:

1. BRB CORE PL A36 SPECIAL, LUG PL A572 GR-50, CASINGS A500 GR-B OR A53 GR-B.
2. ALL GUSSET AND REPAD PL A572 GR-50 U.N.O.
3. USE ASTM F3125 Gr A490-SC/F2280-TC BOLTS. BOLT HOLES IN GUSSET ARE OVERSIZED.
4. CLASS A (TOOL CLEAN) ALL FAYING SURFACES.
5. ALL STIFFENERS TO MATCH BEAM AND COLUMN GRADE.

BOLT TENSIONING PROCEDURE
Bolts shall be torqued to achieve the appropriate bolt tension as set forth in the erector's approved procedures. As a minimum, the following items shall be adhered to:
- Circled notes are keyed on detail.

1 Starting with the most rigid part of the connection (Row 'I') and continuing to the least rigid part of the connection (Row 'v'), bring all bolts to snug-tight condition.
2 Recheck snug-tight condition of bolts in rows 'I' and 'II', re-tighten as necessary.
3 Torque bolts in Row 'I' to appropriate level of tension using approved procedure.
4 Re-check snug tight condition of bolt in row 'III',
5 Torque bolts in Row 'II' to appropriate level using approved procedure.
6 Continue alternating check of snug tight condition of next-to-nearest row and torquing nearest row of untorqed bolts as set forth in steps 4 & 5 until end of brace is reached and all bolts are at appropriate level of torque.
7 Repeat similar procedure at top end of brace.

GENERAL NOTES:
ALL BOLTED BRACE CONNECTIONS SHALL BE INSTALLED IN ACCORDANCE WITH THE ERECTOR'S APPROVED QUALITY ASSURANCE PLAN. AS A MINIMUM, THE FOLLOWING MUST BE MET:

- Tighten all slip-critical bolts and bolts installed in oversized holes by a method approved by the engineer of record. Provide hardened washers under all turned elements.
- Where ASTM A3125 GR A490-SCF2280-TC or stronger bolts are specified in the drawings, provide hardened washer between nut & Lug plate. Where required by AISC Specifications, also provide washer between bolt head & Lug plate.
- Bolts must be long enough for the threads to be flush with the outside face of the nut after tightening. Thread stickout shall not exceed that allowed by the EOR.
- Do not reuse bolts, nuts, or washers.

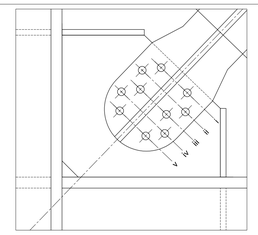

MINIMUM BOLT TENSIONING PROCEDURE C

SCALE:NTS

OVERALL PROCEDURE
- Circled notes are keyed on detail.

① Layout Bottom Brace Connection on Gusset. (See Detail B)
② Establish upper-most bolt-hole, located at distance L_{sh} from lower-most bolt-hole.
③ Layout upper bolt-hole pattern similar to lower bolt-hole pattern. (See Detail B)
④ For minimum bolt tensioning procedure see Detail C.

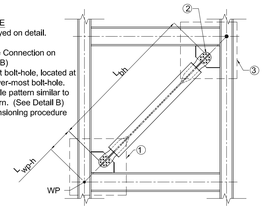

GUSSET LAYOUT PROCEDURE A

SCALE:NTS

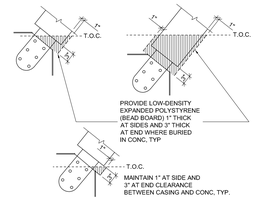

CASING BURIED IN CONCRETE - DETAIL D

SCALE:NTS

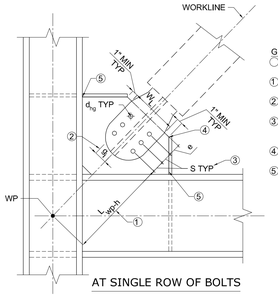

GUSSET LAYOUT PROCEDURE
- Circled notes are keyed on detail.

① Establish location of 1st bolt line along work line.
② Establish inner and outer (where applicable) bolt row offsets with g_i and g_o.
③ Layout bolt hole pattern using hole size, spacing('s'), and edge distance('e') as shown.
④ W_c + 2 x Min Return, gusset edge width perpendicular to work line
⑤ Return to BM and/or COL and verify MIN weld length (including deductions for clip and weld start/stop) is maintained.

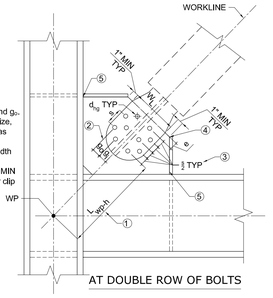

GUSSET LAYOUT PROCEDURE - DETAIL B

SCALE:NTS

tBP
architecture
planning
interiors

tBP/Architecture
4611 Teller Avenue
Newport Beach, CA 92660
ph: 949.673.0300 fx: 949.732.3895
architect

VCA ENGINEERS INC
2151 Michelson Dr. #240
Irvine, CA 92612
Tel. 949.679.0870
Fax. 949.679.9370
Project No.: E358
No. S4029 Exp. 9/30/20
consultant

COREBRACE TYPICAL DETAILS 01

SCALE:NTS

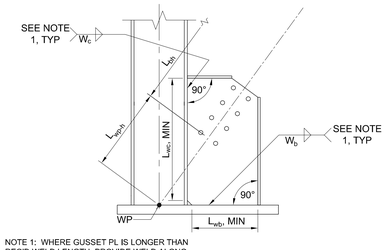

NOTE 1: WHERE GUSSET PL IS LONGER THAN REQ'D WELD LENGTH, PROVIDE WELD ALONG ENTIRE LENGTH TO WITHIN ¾" OF EDGE OF PL.

TYPICAL COLUMN FLANGE @ BASE PLATE 03

SCALE: NTS

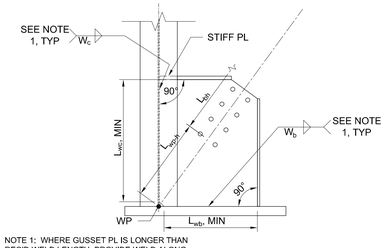

NOTE 1: WHERE GUSSET PL IS LONGER THAN REQ'D WELD LENGTH, PROVIDE WELD ALONG ENTIRE LENGTH TO WITHIN ¾" OF EDGE OF PL.

TYPICAL COLUMN WEB @ BASE PLATE 04

SCALE: NTS

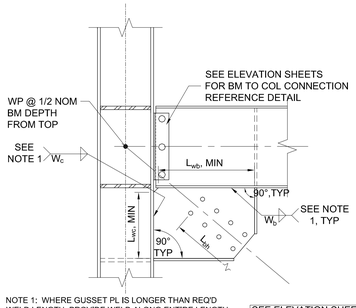

NOTE 1: WHERE GUSSET PL IS LONGER THAN REQ'D WELD LENGTH, PROVIDE WELD ALONG ENTIRE LENGTH TO WITHIN ¾" OF EDGE OF PL.

SEE ELEVATION SHEETS (S6 SERIES) FOR ADDT'L INFO.

TYPICAL COLUMN FLANGE TOP CONNECTION 05

SCALE: NTS

COREBRACE LAYOUT PROCEDURES 02

SCALE:NTS

COMPTON COLLEGE
INSTRUCTIONAL BUILDING No. 2
COMPTON COMMUNITY COLLEGE DISTRICT
1111 E. ARTESIA BLVD. COMPTON, CA.
owner

tBP project number : 20998.00
file name:
drawn by: checked by:
date: 04/08/19

Rev:	date:	description:

THIS DRAWING AND THE DESIGNS, DEPICTIONS, IDEAS AND OTHER INFORMATION CONTAINED HEREIN CONSTITUTE UNPUBLISHED WORK OF tBP/ARCHITECTURE AND SHALL REMAIN THE PROPERTY OF tBP/ARCHITECTURE IN PERPETUITY. NO PART THEREOF SHALL BE REPRODUCED, DISCLOSED, DISTRIBUTED, SOLD, PUBLISHED OR OTHERWISE USED IN ANY WAY WITHOUT THE ADVANCED EXPRESS WRITTEN CONSENT OF tBP/ARCHITECTURE.

drawing title:
BRBF DETAILS

drawing no.:
S0-1.11A
drawing of

CoreBrace
SUPERIOR SEISMIC PERFORMANCE

5789 W.Wells Park Rd.
West Jordan,Utah 84081
(801) 280-0701

CB-ID	EOR-ID	Line	Grids	Lvls	Mark	Qty	L_b	L_c	Casing Type	Casing H_c	Casing W_c	Casing t_c	W_L	W_1	L_{SL}	x_L	L_{Lg}	a	c	L_{Lc}	t_L	D_{wLg}	D_{wL}	L_{WL-i}	n_i	n_o	g	s	e	b_r	L_{ysc}	L'_{ysc}	W_{sc}	t_{sc}	A_{sc}	K_{eff}	Stiffness Modifier K_f	P_{ysc}	F_{ysc} Min	F_{ysc} Max	Axial Test Qualifying Test	Axial Test P_y	Axial Test β	Axial Test ω	Sub-Assemblage Test Qualifying Test	Sub-Assemblage Test P_y	Sub-Assemblage Test β	Sub-Assemblage Test ω	Max (Design Values) β	Max (Design Values) ω	CB Wt
#	#		#	#	#	#	in	in	t,p	in	in	in	in	in	in	in	in	in	in	in	in	#	#	in	#	#	in	in	in	in	in	in	in	in	in^2	K/in	(K_{eff}/K_{Lwp})	kip	ksi	ksi		kips				kips					lb
CB-5.50	BRB-5.50	G	2-2.5	2	-	1	171 9/16	132.25	t	10	10	0.2500	7.63	6.24	26.92	5.29	12.42	4.00	3.00	12.79	0.75	4.00	4.00	5.29	3	0	0.00	4.00	1.63	1.02	107.16	107.16	5.500	1.00	5.50	1219	1.53	209	38	46	CoreBrace BRB (P-Series) Test 2P, June 2012	133.80	1.17	1.28	CoreBrace BRB (P-Series) Test 3P, June 2012	376.20	1.12	1.26	1.17	1.28	1769
CB-5.50	BRB-5.50	G	2.5-3	2	-	1	171 9/16	132.25	t	10	10	0.2500	7.63	6.24	26.92	5.29	12.42	4.00	3.00	12.79	0.75	4.00	4.00	5.29	3	0	0.00	4.00	1.63	1.02	107.16	107.16	5.500	1.00	5.50	1219	1.53	209	38	46	CoreBrace BRB (P-Series) Test 2P, June 2012	133.80	1.17	1.28	CoreBrace BRB (P-Series) Test 3P, June 2012	376.20	1.12	1.26	1.17	1.28	1769
CB-5.50	BRB-5.50	G	3-3.5	2	-	1	171 9/16	132.25	t	10	10	0.2500	7.63	6.24	26.92	5.29	12.42	4.00	3.00	12.79	0.75	4.00	4.00	5.29	3	0	0.00	4.00	1.63	1.02	107.16	107.16	5.500	1.00	5.50	1219	1.53	209	38	46	CoreBrace BRB (P-Series) Test 2P, June 2012	133.80	1.17	1.28	CoreBrace BRB (P-Series) Test 3P, June 2012	376.20	1.12	1.26	1.17	1.28	1769
CB-5.50	BRB-5.50	G	3.5-4	2	-	1	171 9/16	132.25	t	10	10	0.2500	7.63	6.24	26.92	5.29	12.42	4.00	3.00	12.79	0.75	4.00	4.00	5.29	3	0	0.00	4.00	1.63	1.02	107.16	107.16	5.500	1.00	5.50	1219	1.53	209	38	46	CoreBrace BRB (P-Series) Test 2P, June 2012	133.80	1.17	1.28	CoreBrace BRB (P-Series) Test 3P, June 2012	376.20	1.12	1.26	1.17	1.28	1769
CB-5.50	BRB-5.50	G	2-2.5	1	-	1	176 8/16	137.13	t	10	10	0.2500	7.63	6.24	26.92	5.29	12.42	4.00	3.00	12.79	0.75	4.00	4.00	5.29	3	0	0.00	4.00	1.63	1.02	112.05	112.05	5.500	1.00	5.50	1174	1.52	209	38	46	CoreBrace BRB (P-Series) Test 2P, June 2012	133.80	1.17	1.27	CoreBrace BRB (P-Series) Test 3P, June 2012	376.20	1.11	1.24	1.17	1.27	1824
CB-5.50	BRB-5.50	G	2.5-3	1	-	1	176 8/16	137.13	t	10	10	0.2500	7.63	6.24	26.92	5.29	12.42	4.00	3.00	12.79	0.75	4.00	4.00	5.29	3	0	0.00	4.00	1.63	1.02	112.05	112.05	5.500	1.00	5.50	1174	1.52	209	38	46	CoreBrace BRB (P-Series) Test 2P, June 2012	133.80	1.17	1.27	CoreBrace BRB (P-Series) Test 3P, June 2012	376.20	1.11	1.24	1.17	1.27	1824
CB-5.50	BRB-5.50	G	3-3.5	1	-	1	176 8/16	137.13	t	10	10	0.2500	7.63	6.24	26.92	5.29	12.42	4.00	3.00	12.79	0.75	4.00	4.00	5.29	3	0	0.00	4.00	1.63	1.02	112.05	112.05	5.500	1.00	5.50	1174	1.52	209	38	46	CoreBrace BRB (P-Series) Test 2P, June 2012	133.80	1.17	1.27	CoreBrace BRB (P-Series) Test 3P, June 2012	376.20	1.11	1.24	1.17	1.27	1824
CB-5.50	BRB-5.50	G	3.5-4	1	-	1	176 8/16	137.13	t	10	10	0.2500	7.63	6.24	26.92	5.29	12.42	4.00	3.00	12.79	0.75	4.00	4.00	5.29	3	0	0.00	4.00	1.63	1.02	112.05	112.05	5.500	1.00	5.50	1174	1.52	209	38	46	CoreBrace BRB (P-Series) Test 2P, June 2012	133.80	1.17	1.27	CoreBrace BRB (P-Series) Test 3P, June 2012	376.20	1.11	1.24	1.17	1.27	1824
CB-5.50	BRB-5.50	B	4.3-4.5	2	-	1	169 4/16	129.94	t	10	10	0.2500	7.63	6.24	26.92	5.29	12.42	4.00	3.00	12.79	0.75	4.00	4.00	5.29	3	0	0.00	4.00	1.63	1.02	104.83	104.83	5.500	1.00	5.50	1240	1.55	209	38	46	CoreBrace BRB (P-Series) Test 2P, June 2012	133.80	1.17	1.28	CoreBrace BRB (P-Series) Test 3P, June 2012	376.20	1.12	1.25	1.17	1.28	1742
CB-5.50	BRB-5.50	B	4.5-4.7	2	-	1	169 4/16	129.94	t	10	10	0.2500	7.63	6.24	26.92	5.29	12.42	4.00	3.00	12.79	0.75	4.00	4.00	5.29	3	0	0.00	4.00	1.63	1.02	104.83	104.83	5.500	1.00	5.50	1240	1.55	209	38	46	CoreBrace BRB (P-Series) Test 2P, June 2012	133.80	1.17	1.28	CoreBrace BRB (P-Series) Test 3P, June 2012	376.20	1.12	1.25	1.17	1.28	1742
CB-5.50	BRB-5.50	B	4.7-4.9	2	-	1	169 4/16	129.94	t	10	10	0.2500	7.63	6.24	26.92	5.29	12.42	4.00	3.00	12.79	0.75	4.00	4.00	5.29	3	0	0.00	4.00	1.63	1.02	104.83	104.83	5.500	1.00	5.50	1240	1.55	209	38	46	CoreBrace BRB (P-Series) Test 2P, June 2012	133.80	1.17	1.28	CoreBrace BRB (P-Series) Test 3P, June 2012	376.20	1.12	1.25	1.17	1.28	1742
CB-5.50	BRB-5.50	B	4.9-5.2	2	-	1	169 4/16	129.94	t	10	10	0.2500	7.63	6.24	26.92	5.29	12.42	4.00	3.00	12.79	0.75	4.00	4.00	5.29	3	0	0.00	4.00	1.63	1.02	104.83	104.83	5.500	1.00	5.50	1240	1.55	209	38	46	CoreBrace BRB (P-Series) Test 2P, June 2012	133.80	1.17	1.28	CoreBrace BRB (P-Series) Test 3P, June 2012	376.20	1.12	1.25	1.17	1.28	1742
CB-5.50	BRB-5.50	B	4.3-4.5	1	-	1	174 3/16	134.81	t	10	10	0.2500	7.63	6.24	26.92	5.29	12.42	4.00	3.00	12.79	0.75	4.00	4.00	5.29	3	0	0.00	4.00	1.63	1.02	109.74	109.74	5.500	1.00	5.50	1194	1.53	209	38	46	CoreBrace BRB (P-Series) Test 2P, June 2012	133.80	1.17	1.26	CoreBrace BRB (P-Series) Test 3P, June 2012	376.20	1.11	1.24	1.17	1.26	1798
CB-5.50	BRB-5.50	B	4.5-4.7	1	-	1	174 3/16	134.81	t	10	10	0.2500	7.63	6.24	26.92	5.29	12.42	4.00	3.00	12.79	0.75	4.00	4.00	5.29	3	0	0.00	4.00	1.63	1.02	109.74	109.74	5.500	1.00	5.50	1194	1.53	209	38	46	CoreBrace BRB (P-Series) Test 2P, June 2012	133.80	1.17	1.26	CoreBrace BRB (P-Series) Test 3P, June 2012	376.20	1.11	1.24	1.17	1.26	1798
CB-5.50	BRB-5.50	B	4.7-4.9	1	-	1	174 3/16	134.81	t	10	10	0.2500	7.63	6.24	26.92	5.29	12.42	4.00	3.00	12.79	0.75	4.00	4.00	5.29	3	0	0.00	4.00	1.63	1.02	109.74	109.74	5.500	1.00	5.50	1194	1.53	209	38	46	CoreBrace BRB (P-Series) Test 2P, June 2012	133.80	1.17	1.26	CoreBrace BRB (P-Series) Test 3P, June 2012	376.20	1.11	1.24	1.17	1.26	1798
CB-5.50	BRB-5.50	B	4.9-5.2	1	-	1	174 3/16	134.81	t	10	10	0.2500	7.63	6.24	26.92	5.29	12.42	4.00	3.00	12.79	0.75	4.00	4.00	5.29	3	0	0.00	4.00	1.63	1.02	109.74	109.74	5.500	1.00	5.50	1194	1.53	209	38	46	CoreBrace BRB (P-Series) Test 2P, June 2012	133.80	1.17	1.26	CoreBrace BRB (P-Series) Test 3P, June 2012	376.20	1.11	1.24	1.17	1.26	1798
CB-5.50	BRB-5.50	6	G-F.5	2	-	1	178 3/16	138.81	t	10	10	0.2500	7.63	6.24	26.92	5.29	12.42	4.00	3.00	12.79	0.75	4.00	4.00	5.29	3	0	0.00	4.00	1.63	1.02	113.74	113.74	5.500	1.00	5.50	1162	1.50	209	38	46	CoreBrace BRB (P-Series) Test 2P, June 2012	133.80	1.18	1.29	CoreBrace BRB (P-Series) Test 3P, June 2012	376.20	1.12	1.26	1.18	1.29	1843
CB-5.50	BRB-5.50	6	F.5-F	2	-	1	178 3/16	138.81	t	10	10	0.2500	7.63	6.24	26.92	5.29	12.42	4.00	3.00	12.79	0.75	4.00	4.00	5.29	3	0	0.00	4.00	1.63	1.02	113.74	113.74	5.500	1.00	5.50	1162	1.50	209	38	46	CoreBrace BRB (P-Series) Test 2P, June 2012	133.80	1.18	1.29	CoreBrace BRB (P-Series) Test 3P, June 2012	376.20	1.12	1.26	1.18	1.29	1843
CB-5.50	BRB-5.50	6	F-E.5	2	-	1	178 3/16	138.81	t	10	10	0.2500	7.63	6.24	26.92	5.29	12.42	4.00	3.00	12.79	0.75	4.00	4.00	5.29	3	0	0.00	4.00	1.63	1.02	113.74	113.74	5.500	1.00	5.50	1162	1.50	209	38	46	CoreBrace BRB (P-Series) Test 2P, June 2012	133.80	1.18	1.29	CoreBrace BRB (P-Series) Test 3P, June 2012	376.20	1.12	1.26	1.18	1.29	1843
CB-5.50	BRB-5.50	6	E.5-E	2	-	1	178 3/16	138.81	t	10	10	0.2500	7.63	6.24	26.92	5.29	12.42	4.00	3.00	12.79	0.75	4.00	4.00	5.29	3	0	0.00	4.00	1.63	1.02	113.74	113.74	5.500	1.00	5.50	1162	1.50	209	38	46	CoreBrace BRB (P-Series) Test 2P, June 2012	133.80	1.18	1.29	CoreBrace BRB (P-Series) Test 3P, June 2012	376.20	1.12	1.26	1.18	1.29	1843
CB-5.50	BRB-5.50	6	G-F.5	1	-	1	183	143.69	t	10	10	0.2500	7.63	6.24	26.92	5.29	12.42	4.00	3.00	12.79	0.75	4.00	4.00	5.29	3	0	0.00	4.00	1.63	1.02	118.59	118.59	5.500	1.00	5.50	1122	1.49	209	38	46	CoreBrace BRB (P-Series) Test 2P, June 2012	133.80	1.17	1.28	CoreBrace BRB (P-Series) Test 3P, June 2012	376.20	1.12	1.25	1.17	1.28	1898
CB-5.50	BRB-5.50	6	F.5-F	1	-	1	183	143.69	t	10	10	0.2500	7.63	6.24	26.92	5.29	12.42	4.00	3.00	12.79	0.75	4.00	4.00	5.29	3	0	0.00	4.00	1.63	1.02	118.59	118.59	5.500	1.00	5.50	1122	1.49	209	38	46	CoreBrace BRB (P-Series) Test 2P, June 2012	133.80	1.17	1.28	CoreBrace BRB (P-Series) Test 3P, June 2012	376.20	1.12	1.25	1.17	1.28	1898
CB-5.50	BRB-5.50	6	F-E.5	1	-	1	183	143.69	t	10	10	0.2500	7.63	6.24	26.92	5.29	12.42	4.00	3.00	12.79	0.75	4.00	4.00	5.29	3	0	0.00	4.00	1.63	1.02	118.59	118.59	5.500	1.00	5.50	1122	1.49	209	38	46	CoreBrace BRB (P-Series) Test 2P, June 2012	133.80	1.17	1.28	CoreBrace BRB (P-Series) Test 3P, June 2012	376.20	1.12	1.25	1.17	1.28	1898
CB-5.50	BRB-5.50	6	E.5-E	1	-	1	183	143.69	t	10	10	0.2500	7.63	6.24	26.92	5.29	12.42	4.00	3.00	12.79	0.75	4.00	4.00	5.29	3	0	0.00	4.00	1.63	1.02	118.59	118.59	5.500	1.00	5.50	1122	1.49	209	38	46	CoreBrace BRB (P-Series) Test 2P, June 2012	133.80	1.17	1.28	CoreBrace BRB (P-Series) Test 3P, June 2012	376.20	1.12	1.25	1.17	1.28	1898
CB-5.50	BRB-5.50	8	H-G	2	-	1	179 12/16	140.44	t	10	10	0.2500	7.63	6.24	26.92	5.29	12.42	4.00	3.00	12.79	0.75	4.00	4.00	5.29	3	0	0.00	4.00	1.63	1.02	115.32	115.32	5.500	1.00	5.50	1149	1.49	209	38	46	CoreBrace BRB (P-Series) Test 2P, June 2012	133.80	1.18	1.29	CoreBrace BRB (P-Series) Test 3P, June 2012	376.20	1.12	1.26	1.18	1.29	1861
CB-5.50	BRB-5.50	8	G-F.5	2	-	1	179 6/16	140.06	t	10	10	0.2500	7.63	6.24	26.92	5.29	12.42	4.00	3.00	12.79	0.75	4.00	4.00	5.29	3	0	0.00	4.00	1.63	1.02	114.94	114.94	5.500	1.00	5.50	1152	1.50	209	38	46	CoreBrace BRB (P-Series) Test 2P, June 2012	133.80	1.18	1.29	CoreBrace BRB (P-Series) Test 3P, June 2012	376.20	1.12	1.26	1.18	1.29	1857
CB-5.50	BRB-5.50	8	F.5-F	2	-	1	179 6/16	140.06	t	10	10	0.2500	7.63	6.24	26.92	5.29	12.42	4.00	3.00	12.79	0.75	4.00	4.00	5.29	3	0	0.00	4.00	1.63	1.02	114.94	114.94	5.500	1.00	5.50	1152	1.50	209	38	46	CoreBrace BRB (P-Series) Test 2P, June 2012	133.80	1.18	1.29	CoreBrace BRB (P-Series) Test 3P, June 2012	376.20	1.12	1.26	1.18	1.29	1857
CB-5.50	BRB-5.50	8	F-E.5	2	-	1	179 6/16	140.06	t	10	10	0.2500	7.63	6.24	26.92	5.29	12.42	4.00	3.00	12.79	0.75	4.00	4.00	5.29	3	0	0.00	4.00	1.63	1.02	114.94	114.94	5.500	1.00	5.50	1152	1.50	209	38	46	CoreBrace BRB (P-Series) Test 2P, June 2012	133.80	1.18	1.29	CoreBrace BRB (P-Series) Test 3P, June 2012	376.20	1.12	1.26	1.18	1.29	1857
CB-5.50	BRB-5.50	8	H-G	1	-	1	184 10/16	145.25	t	10	10	0.2500	7.63	6.24	26.92	5.29	12.42	4.00	3.00	12.79	0.75	4.00	4.00	5.29	3	0	0.00	4.00	1.63	1.02	120.17	120.17	5.500	1.00	5.50	1110	1.48	209	38	46	CoreBrace BRB (P-Series) Test 2P, June 2012	133.80	1.17	1.28	CoreBrace BRB (P-Series) Test 3P, June 2012	376.20	1.12	1.25	1.17	1.28	1916
CB-5.50	BRB-5.50	8	G-F.5	1	-	1	184 4/16	144.88	t	10	10	0.2500	7.63	6.24	26.92	5.29	12.42	4.00	3.00	12.79	0.75	4.00	4.00	5.29	3	0	0.00	4.00	1.63	1.02	119.79	119.79	5.500	1.00	5.50	1112	1.48	209	38	46	CoreBrace BRB (P-Series) Test 2P, June 2012	133.80	1.17	1.28	CoreBrace BRB (P-Series) Test 3P, June 2012	376.20	1.12	1.25	1.17	1.28	1912
CB-5.50	BRB-5.50	8	F.5-F	1	-	1	184 4/16	144.88	t	10	10	0.2500	7.63	6.24	26.92	5.29	12.42	4.00	3.00	12.79	0.75	4.00	4.00	5.29	3	0	0.00	4.00	1.63	1.02	119.79	119.79	5.500	1.00	5.50	1112	1.48	209	38	46	CoreBrace BRB (P-Series) Test 2P, June 2012	133.80	1.17	1.28	CoreBrace BRB (P-Series) Test 3P, June 2012	376.20	1.12	1.25	1.17	1.28	1912
CB-5.50	BRB-5.50	8	F-E.5	1	-	1	184 4/16	144.88	t	10	10	0.2500	7.63	6.24	26.92	5.29	12.42	4.00	3.00	12.79	0.75	4.00	4.00	5.29	3	0	0.00	4.00	1.63	1.02	119.79	119.79	5.500	1.00	5.50	1112	1.48	209	38	46	CoreBrace BRB (P-Series) Test 2P, June 2012	133.80	1.17	1.28	CoreBrace BRB (P-Series) Test 3P, June 2012	376.20	1.12	1.25	1.17	1.28	1912
CB-3.00	BRB-3.00	H	8-8.25	2	-	1	162 12/16	129.56	t	8	8	0.2500	7.38	4.42	26.10	3.33	9.35	4.00	3.00	13.08	0.50	3.00	3.00	3.33	2	0	0.00	5.00	1.63	0.96	103.89	103.89	4.000	0.75	3.00	672	1.50	114	38	46	CoreBrace BRB (P-Series) Test 2P, June 2012	133.80	1.17	1.24	CoreBrace BRB (P-Series) Test 3P, June 2012	376.20	1.11	1.22	1.17	1.24	1109
CB-3.00	BRB-3.00	H	8.25-8.5	2	-	1	162 12/16	129.56	t	8	8	0.2500	7.38	4.42	26.10	3.33	9.35	4.00	3.00	13.08	0.50	3.00	3.00	3.33	2	0	0.00	5.00	1.63	0.96	103.89	103.89	4.000	0.75	3.00	672	1.50	114	38	46	CoreBrace BRB (P-Series) Test 2P, June 2012	133.80	1.17	1.24	CoreBrace BRB (P-Series) Test 3P, June 2012	376.20	1.11	1.22	1.17	1.24	1109
CB-3.00	BRB-3.00	H	8.5-8.75	2	-	1	162 12/16	129.56	t	8	8	0.2500	7.38	4.42	26.10	3.33	9.35	4.00	3.00	13.08	0.50	3.00	3.00	3.33	2	0	0.00	5.00	1.63	0.96	103.89	103.89	4.000	0.75	3.00	672	1.50	114	38	46	CoreBrace BRB (P-Series) Test 2P, June 2012	133.80	1.17	1.24	CoreBrace BRB (P-Series) Test 3P, June 2012	376.20	1.11	1.22	1.17	1.24	1109
CB-3.00	BRB-3.00	H	8.75-9	2	-	1	162 12/16	129.56	t	8	8	0.2500	7.38	4.42	26.10	3.33	9.35	4.00	3.00	13.08	0.50	3.00	3.00	3.33	2	0	0.00	5.00	1.63	0.96	103.89	103.89	4.000	0.75	3.00	672	1.50	114	38	46	CoreBrace BRB (P-Series) Test 2P, June 2012	133.80	1.17	1.24	CoreBrace BRB (P-Series) Test 3P, June 2012	376.20	1.11	1.22	1.17	1.24	1109
CB-3.00	BRB-3.00	H	8-8.25	1	-	1	167 11/16	134.50	t	8	8	0.2500	7.38	4.42	26.10	3.33	9.35	4.00	3.00	13.08	0.50	3.00	3.00	3.33	2	0	0.00	5.00	1.63	0.96	108.82	108.82	4.000	0.75	3.00	647	1.49	114	38	46	CoreBrace BRB (P-Series) Test 2P, June 2012	133.80	1.17	1.23	CoreBrace BRB (P-Series) Test 3P, June 2012	376.20	1.11	1.21	1.17	1.23	1146
CB-3.00	BRB-3.00	H	8.25-8.5	1	-	1	167 11/16	134.50	t	8	8	0.2500	7.38	4.42	26.10	3.33	9.35	4.00	3.00	13.08	0.50	3.00	3.00	3.33	2	0	0.00	5.00	1.63	0.96	108.82	108.82	4.000	0.75	3.00	647	1.49	114	38	46	CoreBrace BRB (P-Series) Test 2P, June 2012	133.80	1.17	1.23	CoreBrace BRB (P-Series) Test 3P, June 2012	376.20	1.11	1.21	1.17	1.23	1146
CB-3.00	BRB-3.00	H	8.5-8.75	1	-	1	167 11/16	134.50	t	8	8	0.2500	7.38	4.42	26.10	3.33	9.35	4.00	3.00	13.08	0.50	3.00	3.00	3.33	2	0	0.00	5.00	1.63	0.96	108.82	108.82	4.000	0.75	3.00	647	1.49	114	38	46	CoreBrace BRB (P-Series) Test 2P, June 2012	133.80	1.17	1.23	CoreBrace BRB (P-Series) Test 3P, June 2012	376.20	1.11	1.21	1.17	1.23	1146
CB-3.00	BRB-3.00	H	8.75-9	1	-	1	167 11/16	134.50	t	8	8	0.2500	7.38	4.42	26.10	3.33	9.35	4.00	3.00	13.08	0.50	3.00	3.00	3.33	2	0	0.00	5.00	1.63	0.96	108.82	108.82	4.000	0.75	3.00	647	1.49	114	38	46	CoreBrace BRB (P-Series) Test 2P, June 2012	133.80	1.17	1.23	CoreBrace BRB (P-Series) Test 3P, June 2012	376.20	1.11	1.21	1.17	1.23	1146
CB-5.50	BRB-5.50	9	E-D.5	2	-	1	165 9/16	126.25	t	10	10	0.2500	7.63	6.24	26.92	5.29	12.42	4.00	3.00	12.79	0.75	4.00	4.00	5.29	3	0	0.00	4.00	1.63	1.02	101.13	101.13	5.500	1.00	5.50	1275	1.57	209	38	46	CoreBrace BRB (P-Series) Test 2P, June 2012	133.80	1.17	1.27	CoreBrace BRB (P-Series) Test 3P, June 2012	376.20	1.11	1.25	1.17	1.27	1701
CB-5.50	BRB-5.50	9	D.5-D	2	-	1	165 9/16	126.25	t	10	10	0.2500	7.63	6.24	26.92	5.29	12.42	4.00	3.00	12.79	0.75	4.00	4.00	5.29	3	0	0.00	4.00	1.63	1.02	101.13	101.13	5.500	1.00	5.50	1275	1.57	209	38	46	CoreBrace BRB (P-Series) Test 2P, June 2012	133.80	1.17	1.27	CoreBrace BRB (P-Series) Test 3P, June 2012	376.20	1.11	1.25	1.17	1.27	1701
CB-5.50	BRB-5.50	9	D-C.6	2	-	1	159 1/16	119.69	t	10	10	0.2500	7.63	6.24	26.92	5.29	12.42	4.00	3.00	12.79	0.75	4.00	4.00	5.29	3	0	0.00	4.00	1.63	1.02	94.62	94.62	5.500	1.00	5.50	1342	1.62	209	38	46	CoreBrace BRB (P-Series) Test 2P, June 2012	133.80	1.17	1.25	CoreBrace BRB (P-Series) Test 3P, June 2012	376.20	1.11	1.23	1.17	1.25	1626
CB-5.50	BRB-5.50	9	C.6-C.2	2	-	1	159 9/16	120.19	t	10	10	0.2500	7.63	6.24	26.92	5.29	12.42	4.00	3.00	12.79	0.75	4.00	4.00	5.29	3	0	0.00	4.00	1.63	1.02	95.12	95.12	5.500	1.00	5.50	1337	1.61	209	38	46	CoreBrace BRB (P-Series) Test 2P, June 2012	133.80	1.17	1.25	CoreBrace BRB (P-Series) Test 3P, June 2012	376.20	1.11	1.23	1.17	1.25	1632
CB-5.50	BRB-5.50	9	E-D.5	1	-	1	170 8/16	131.13	t	10	10	0.2500	7.63	6.24	26.92	5.29	12.42	4.00	3.00	12.79	0.75	4.00	4.00	5.29	3	0	0.00	4.00	1.63	1.02	106.05	106.05	5.500	1.00	5.50	1226	1.55	209	38	46	CoreBrace BRB (P-Series) Test 2P, June 2012	133.80	1.17	1.25	CoreBrace BRB (P-Series) Test 3P, June 2012	376.20	1.11	1.23	1.17	1.25	1756
CB-5.50	BRB-5.50	9	D.5-D	1	-	1	170 8/16	131.13	t	10	10	0.2500	7.63	6.24	26.92	5.29	12.42	4.00	3.00	12.79	0.75	4.00	4.00	5.29	3	0	0.00	4.00	1.63	1.02	106.05	106.05	5.500	1.00	5.50	1226	1.55	209	38	46	CoreBrace BRB (P-Series) Test 2P, June 2012	133.80	1.17	1.25	CoreBrace BRB (P-Series) Test 3P, June 2012	376.20	1.11	1.23	1.17	1.25	1756
CB-5.50	BRB-5.50	9	D-C.6	1	-	1	163 15/16	124.63	t	10	10	0.2500	7.63	6.24	26.92	5.29	12.42	4.00	3.00	12.79	0.75	4.00	4.00	5.29	3	0	0.00	4.00	1.63	1.02	99.53	99.53	5.500	1.00	5.50	1288	1.60	209	38	46	CoreBrace BRB (P-Series) Test 2P, June 2012	133.80	1.17	1.24	CoreBrace BRB (P-Series) Test 3P, June 2012	376.20	1.11	1.22	1.17	1.24	1682
CB-5.50	BRB-5.50	9	C.6-C.2	1	-	1	164 8/16	125.13	t	10	10	0.2500	7.63	6.24	26.92	5.29	12.42	4.00	3.00	12.79	0.75	4.00	4.00	5.29	3	0	0.00	4.00	1.63	1.02	100.05	100.05	5.500	1.00	5.50	1283	1.59	209	38	46	CoreBrace BRB (P-Series) Test 2P, June 2012	133.80	1.17	1.23	CoreBrace BRB (P-Series) Test 3P, June 2012	376.20	1.11	1.22	1.17	1.23	1688
CB-5.50	BRB-5.50	C.2	8-8.4	2	-	1	173 10/16	134.25	t	10	10	0.2500	7.63	6.24	26.92	5.29	12.42	4.00	3.00	12.79	0.75	4.00	4.00	5.29	3	0	0.00	4.00	1.63	1.02	109.16	109.16	5.500	1.00	5.50	1198	1.55	209	38	46	CoreBrace BRB (P-Series) Test 2P, June 2012	133.80	1.18	1.31	CoreBrace BRB (P-Series) Test 3P, June 2012	376.20	1.12	1.28	1.18	1.31	1791
CB-5.50	BRB-5.50	C.2	8-8.4	1	-	1	178 8/16	139.19	t	10	10	0.2500	7.63	6.24	26.92	5.29	12.42	4.00	3.00	12.79	0.75	4.00	4.00	5.29	3	0	0.00	4.00	1.63	1.02	114.07	114.07	5.500	1.00	5.50	1154	1.53	209	38	46	CoreBrace BRB (P-Series) Test 2P, June 2012	133.80	1.18	1.30	CoreBrace BRB (P-Series) Test 3P, June 2012	376.20	1.12	1.27	1.18	1.30	1847
CB-5.50	BRB-5.50	C.2	8.6-9	2	-	1	173 10/16	134.25	t	10	10	0.2500	7.63	6.24	26.92	5.29	12.42	4.00	3.00	12.79	0.75	4.00	4.00	5.29	3	0	0.00	4.00	1.63	1.02	109.16	109.16	5.500	1.00	5.50	1198	1.55	209	38	46	CoreBrace BRB (P-Series) Test 2P, June 2012	133.80	1.18	1.31	CoreBrace BRB (P-Series) Test 3P, June 2012	376.20	1.12	1.28	1.18	1.31	1791
CB-5.50	BRB-5.50	C.2	8.6-9	1	-	1	178 8/16	139.19	t	10	10	0.2500	7.63	6.24	26.92	5.29	12.42	4.00	3.00	12.79	0.75	4.00	4.00	5.29	3	0	0.00	4.00	1.63	1.02	114.07	114.07	5.500	1.00	5.50	1154	1.53	209	38	46	CoreBrace BRB (P-Series) Test 2P, June 2012	133.80	1.18	1.30	CoreBrace BRB (P-Series) Test 3P, June 2012	376.20	1.12	1.27	1.18	1.30	1847
CB-5.50	BRB-5.50	1	G-F.5	2	-	1	178 3/16	138.81	t	10	10	0.2500	7.63	6.24	26.92	5.29	12.42	4.00	3.00	12.79	0.75	4.00	4.00	5.29	3	0	0.00	4.00	1.63	1.02	113.74	113.74	5.500	1.00	5.50	1162	1.50	209	38	46	CoreBrace BRB (P-Series) Test 2P, June 2012	133.80	1.18	1.29	CoreBrace BRB (P-Series) Test 3P, June 2012	376.20	1.12	1.26	1.18	1.29	1843
CB-5.50	BRB-5.50	1	F.5-F	2	-	1	178 3/16	138.81	t	10	10	0.2500	7.63	6.24	26.92	5.29	12.42	4.00	3.00	12.79	0.75	4.00	4.00	5.29	3	0	0.00	4.00	1.63	1.02	113.74	113.74	5.500	1.00	5.50	1162	1.50	209	38	46	CoreBrace BRB (P-Series) Test 2P, June 2012	133.80	1.18	1.29	CoreBrace BRB (P-Series) Test 3P, June 2012	376.20	1.12	1.26	1.18	1.29	1843
CB-5.50	BRB-5.50	1	F-E.5	2	-	1	178 3/16	138.81	t	10	10	0.2500	7.63	6.24	26.92	5.29	12.42	4.00	3.00	12.79	0.75	4.00	4.00	5.29	3	0	0.00	4.00	1.63	1.02	113.74	113.74	5.500	1.00	5.50	1162	1.50	209	38	46	CoreBrace BRB (P-Series) Test 2P, June 2012	133.80	1.18	1.29	CoreBrace BRB (P-Series) Test 3P, June 2012	376.20	1.12	1.26	1.18	1.29	1843
CB-5.50	BRB-5.50	1	E.5-E	2	-	1	178 3/16	138.81	t	10	10	0.2500	7.63	6.24	26.92	5.29	12.42	4.00	3.00	12.79	0.75	4.00	4.00	5.29	3	0	0.00	4.00	1.63	1.02	113.74	113.74	5.500	1.00	5.50	1162	1.50	209	38	46	CoreBrace BRB (P-Series) Test 2P, June 2012	133.80	1.18	1.29	CoreBrace BRB (P-Series) Test 3P, June 2012	376.20	1.12	1.26	1.18	1.29	1843
CB-6.00	BRB-6.00	1	G-F.5	1	-	1	183	135.69	t	10	10	0.2500	7.63	6.65	30.92	5.82	16.42	4.00	3.00	13.32	0.75	4.00	4.00	5.82	4	0	0.00	4.00	1.63	1.02	109.55	109.55	6.000	1.00	6.00	1290	1.57	228	38	44	CoreBrace BRB (P-Series) Test 2P, June 2012	133.80	1.18	1.31	CoreBrace BRB (P-Series) Test 3P, June 2012	376.20	1.12	1.28	1.18	1.31	1866
CB-6.00	BRB-6.00	1	F.5-F	1	-	1	183	135.69	t	10	10	0.2500	7.63	6.65	30.92	5.82	16.42	4.00	3.00	13.32	0.75	4.00	4.00	5.82	4	0	0.00	4.00	1.63	1.02	109.55	109.55	6.000	1.00	6.00	1290	1.57	228	38	44	CoreBrace BRB (P-Series) Test 2P, June 2012	133.80	1.18	1.31	CoreBrace BRB (P-Series) Test 3P, June 2012	376.20	1.12	1.28	1.18	1.31	1866
CB-6.00	BRB-6.00	1	F-E.5	1	-	1	183	135.69	t	10	10	0.2500	7.63	6.65	30.92	5.82	16.42	4.00	3.00	13.32	0.75	4.00	4.00	5.82	4	0	0.00	4.00	1.63	1.02	109.55	109.55	6.000	1.00	6.00	1290	1.57	228	38	44	CoreBrace BRB (P-Series) Test 2P, June 2012	133.80	1.18	1.31	CoreBrace BRB (P-Series) Test 3P, June 2012	376.20	1.12	1.28	1.18	1.31	1866
CB-6.00	BRB-6.00	1	E.5-E	1	-	1	183	135.69	t	10	10	0.2500	7.63	6.65	30.92	5.82	16.42	4.00	3.00	13.32	0.75	4.00	4.00	5.82	4	0	0.00	4.00	1.63	1.02	109.55	109.55	6.000	1.00	6.00	1290	1.57	228	38	44	CoreBrace BRB (P-Series) Test 2P, June 2012	133.80	1.18	1.31	CoreBrace BRB (P-Series) Test 3P, June 2012	376.20	1.12	1.28	1.18	1.31	1866
						60																																													

Sum --> 103,257 lbs
Max --> 1,916 lbs

Table of Symbols

- L_b = Length of CB tip to tip
- L_c = Length of casing
- **Casing** = Size & type of casing
- **Type** = t = tube (HSS) and p = pipe
- W_L = Width of Lug
- W_1 = Width at Reduced Section of Lug
- L_{SL} = Total Length of Lug minus Transition (xL)
- x_L = Length from start of lug transition to end of lug transition
- L_{Lg} = Length of Lap on Gusset
- **a** = Gap between core and gusset
- **c** = Core extension length out of casing
- L_{Lc} = Length of Lug within Casing (incl. xL)
- t_L = Thickness of lug
- D_{wLg} = Size of weld at lug to core at bolt pattern # 1/16ths
- D_{wL} = Size of weld at lug to core beyond bolt pattern # 1/16ths
- L_{WL-i} = Weld length required at inside face of lug
- n_i = Number of bolts in inner row
- n_o = Number of bolts in outer row
- **g** = Gauge between outer & inner bolt rows
- **s** = Bolt Spacing
- **e** = Typical bolt edge distance
- b_r = Distance to start of radius from first outermost bolt. (If negative it is towards end of CB from bolt.)
- L_{ysc} = Length of yielding core w/out allowance for Cntr Stiffener
- L'_{ysc} = Yield length of core - Yielding Portion Only
- W_{sc} = Width of core at yield section
- t_{sc} = Thickness of core
- A_{sc} = Cross sectional area of core at yield section
- K_{eff} = Effective Stiffness of BRB from WP to WP
- K_f = Axial Stiffness Adjustment Factor
- P_{ysc} = Yield force of CB (A_{sc} x F_{ysc_min})
- F_{ysc} = Specified yield stress range of core plate. Values may be adjusted if minimum yield strength and stiffness requirements are met.
- P_y = Yield strength of qualifying test specimen
- **β** = Maximum compression adjustment factor based on backbone curves
- **ω** = Maximum tension adjustment factor based on backbone curves

COREBRACE BRB PROPERTIES SCHEDULE (1)
SCALE:NTS

CB-ID	EOR-ID	Line	Grids	Lvls	Mark	Qty	W_{WP}	H_{WP}	L_{bh}	L_{wp-h}	Hole Pattern n_i	n_o	e	s	g_i	g_o	d_{hg}	Gusset t_g	Gusset $F_{y,g}$	Lug W_L	t_L	t_s	L_{Lg}	W_{L-Alt}	L_{WL-Alt}	Bolt d_b	G	L'	La	3.25"	3.50"	3.75"	4.00"	4.25"	4.50"	Bot. Bm/Col Flange Bot W_b	L_{wb}	W_c	L_{wc}	L_{gb}	L_{gc}	Bot. Bm/Col Web (90) Bot W_b	L_{wb}	W_c	L_{wc}	L_{gb}	L_{gc}	Top Bm/Col Flange Top W_b	L_{wb}	W_c	L_{wc}	Ext	L_{gb}	L_{gc}	Top Chev Λ W_b	L_{wb}	L_{gb}	L_{gc}	Req. Stiff or CP Bottom End Beam	Bottom End Col	Top End Beam	Top End Col	Req. Web Doubler Bottom End Beam t_{Dblr}	Bottom End Col t_{Dblr}	Top End Beam t_{Dblr}	Top End Col t_{Dblr}	CB Wt	Total CB Wt
#	#		#	#	#	#	in	in	in	in	#	#	in	in	in	in	in	in	ksi	in	in	in	in	in	in	in	in	in	in	Qty	Qty	Qty	Qty	Qty	Qty	in	in	in	in	in	in	in	in	in	in	in	in	in	in	in	in	?	in	in	in	in	in	in									lb	lb
CB-5.50	BRB-5.50	G	2-2.5	2	-	1	95	177	166	19 3/16	3	0	1 10/16	4.00	2 3/16	0	1 7/16	1	50	7 5/8	3/4	1	12 7/16	9/16	27	1 1/8	2.56	4.240	4 1/4	-	-	-	-	12	-	7/16	12	3/8	17	14	19	-	-	-	-	-	-	-	-	-	-	-	-	-	7/16	15	16	16	-	-	**	-	-	-	-	-	1769	1769
CB-5.50	BRB-5.50	G	2.5-3	2	-	1	95	177	166	19 3/16	3	0	1 10/16	4.00	2 3/16	0	1 7/16	1	50	7 5/8	3/4	1	12 7/16	9/16	27	1 1/8	2.56	4.240	4 1/4	-	-	-	-	12	-	7/16	12	3/8	17	14	19	-	-	-	-	-	-	-	-	-	-	-	-	-	7/16	15	16	16	-	-	**	-	-	0.38"	-	-	1769	1769
CB-5.50	BRB-5.50	G	3-3.5	2	-	1	95	177	166	19 3/16	3	0	1 10/16	4.00	2 3/16	0	1 7/16	1	50	7 5/8	3/4	1	12 7/16	9/16	27	1 1/8	2.56	4.240	4 1/4	-	-	-	-	12	-	7/16	12	3/8	17	14	19	-	-	-	-	-	-	-	-	-	-	-	-	-	7/16	15	16	16	-	-	**	-	-	0.38"	-	-	1769	1769
CB-5.50	BRB-5.50	G	3.5-4	2	-	1	95	177	166	19 3/16	3	0	1 10/16	4.00	2 3/16	0	1 7/16	1	50	7 5/8	3/4	1	12 7/16	9/16	27	1 1/8	2.56	4.240	4 1/4	-	-	-	-	12	-	7/16	12	3/8	17	14	19	-	-	-	-	-	-	-	-	-	-	-	-	-	7/16	15	16	16	-	-	**	-	-	-	-	-	1769	1769
CB-5.50	BRB-5.50	G	2-2.5	1	-	1	95	183	170 14/16	19 12/16	3	0	1 10/16	4.00	2 3/16	0	1 7/16	1	50	7 5/8	3/4	1	12 7/16	9/16	27	1 1/8	2.56	4.240	4 1/4	-	-	-	-	12	-	5/16	12	3/8	27	14	29	-	-	-	-	-	-	-	-	-	-	-	-	-	7/16	15	16	16	-	-	**	-	-	0.25"	-	-	1824	1824
CB-5.50	BRB-5.50	G	2.5-3	1	-	1	95	183	170 14/16	19 12/16	3	0	1 10/16	4.00	2 3/16	0	1 7/16	1	50	7 5/8	3/4	1	12 7/16	9/16	27	1 1/8	2.56	4.240	4 1/4	-	-	-	-	12	-	5/16	12	3/8	27	14	29	-	-	-	-	-	-	-	-	-	-	-	-	-	7/16	15	16	16	-	-	**	-	-	0.50"	-	-	1824	1824
CB-5.50	BRB-5.50	G	3-3.5	1	-	1	95	183	170 14/16	19 12/16	3	0	1 10/16	4.00	2 3/16	0	1 7/16	1	50	7 5/8	3/4	1	12 7/16	9/16	27	1 1/8	2.56	4.240	4 1/4	-	-	-	-	12	-	5/16	12	3/8	27	14	29	-	-	-	-	-	-	-	-	-	-	-	-	-	7/16	15	16	16	-	-	**	-	-	0.50"	-	-	1824	1824
CB-5.50	BRB-5.50	G	3.5-4	1	-	1	95	183	170 14/16	19 12/16	3	0	1 10/16	4.00	2 3/16	0	1 7/16	1	50	7 5/8	3/4	1	12 7/16	9/16	27	1 1/8	2.56	4.240	4 1/4	-	-	-	-	12	-	5/16	12	3/8	27	14	29	-	-	-	-	-	-	-	-	-	-	-	-	-	7/16	15	16	16	-	-	**	-	-	0.25"	-	-	1824	1824
CB-5.50	BRB-5.50	B	4.3-4.5	2	-	1	91 2/16	177	163 11/16	19 14/16	3	0	1 10/16	4.00	2 3/16	0	1 7/16	1	50	7 5/8	3/4	1	12 7/16	9/16	27	1 1/8	2.56	4.240	4 1/4	-	-	-	-	12	-	7/16	12	3/8	18	14	20	-	-	-	-	-	-	-	-	-	-	-	-	-	7/16	15	16	16	-	-	**	-	-	-	-	-	1742	1742
CB-5.50	BRB-5.50	B	4.5-4.7	2	-	1	91 2/16	177	163 11/16	19 14/16	3	0	1 10/16	4.00	2 3/16	0	1 7/16	1	50	7 5/8	3/4	1	12 7/16	9/16	27	1 1/8	2.56	4.240	4 1/4	-	-	-	-	12	-	7/16	12	3/8	18	14	20	-	-	-	-	-	-	-	-	-	-	-	-	-	7/16	15	16	16	-	-	**	-	-	0.38"	-	-	1742	1742
CB-5.50	BRB-5.50	B	4.7-4.9	2	-	1	91 2/16	177	163 11/16	19 14/16	3	0	1 10/16	4.00	2 3/16	0	1 7/16	1	50	7 5/8	3/4	1	12 7/16	9/16	27	1 1/8	2.56	4.240	4 1/4	-	-	-	-	12	-	7/16	12	3/8	18	14	20	-	-	-	-	-	-	-	-	-	-	-	-	-	7/16	15	16	16	-	-	**	-	-	0.38"	-	-	1742	1742
CB-5.50	BRB-5.50	B	4.9-5.2	2	-	1	91 2/16	177	163 11/16	19 14/16	3	0	1 10/16	4.00	2 3/16	0	1 7/16	1	50	7 5/8	3/4	1	12 7/16	9/16	27	1 1/8	2.56	4.240	4 1/4	-	-	-	-	12	-	7/16	12	3/8	18	14	20	-	-	-	-	-	-	-	-	-	-	-	-	-	7/16	15	16	16	-	-	**	-	-	-	-	-	1742	1742
CB-5.50	BRB-5.50	B	4.3-4.5	1	-	1	91 2/16	183	168 9/16	20 7/16	3	0	1 10/16	4.00	2 3/16	0	1 7/16	1	50	7 5/8	3/4	1	12 7/16	9/16	27	1 1/8	2.56	4.240	4 1/4	-	-	-	-	12	-	5/16	12	3/8	28	14	30	-	-	-	-	-	-	-	-	-	-	-	-	-	7/16	15	16	16	-	-	**	-	-	0.25"	-	-	1798	1798
CB-5.50	BRB-5.50	B	4.5-4.7	1	-	1	91 2/16	183	168 9/16	20 7/16	3	0	1 10/16	4.00	2 3/16	0	1 7/16	1	50	7 5/8	3/4	1	12 7/16	9/16	27	1 1/8	2.56	4.240	4 1/4	-	-	-	-	12	-	5/16	12	3/8	28	14	30	-	-	-	-	-	-	-	-	-	-	-	-	-	7/16	15	16	16	-	-	**	-	-	0.50"	-	-	1798	1798
CB-5.50	BRB-5.50	B	4.7-4.9	1	-	1	91 2/16	183	168 9/16	20 7/16	3	0	1 10/16	4.00	2 3/16	0	1 7/16	1	50	7 5/8	3/4	1	12 7/16	9/16	27	1 1/8	2.56	4.240	4 1/4	-	-	-	-	12	-	5/16	12	3/8	28	14	30	-	-	-	-	-	-	-	-	-	-	-	-	-	7/16	15	16	16	-	-	**	-	-	0.50"	-	-	1798	1798
CB-5.50	BRB-5.50	B	4.9-5.2	1	-	1	91 2/16	183	168 9/16	20 7/16	3	0	1 10/16	4.00	2 3/16	0	1 7/16	1	50	7 5/8	3/4	1	12 7/16	9/16	27	1 1/8	2.56	4.240	4 1/4	-	-	-	-	12	-	5/16	12	3/8	28	14	30	-	-	-	-	-	-	-	-	-	-	-	-	-	7/16	15	16	16	-	-	**	-	-	0.25"	-	-	1798	1798
CB-5.50	BRB-5.50	6	G-F.5	2	-	1	106	177	172 9/16	17 10/16	3	0	1 10/16	4.00	2 3/16	0	1 7/16	1	50	7 5/8	3/4	1	12 7/16	9/16	27	1 1/8	2.56	4.240	4 1/4	-	-	-	-	12	-	7/16	12	7/16	15	14	17	-	-	-	-	-	-	-	-	-	-	-	-	-	7/16	17	18	16	-	-	**	-	-	0.25"	-	-	1843	1843
CB-5.50	BRB-5.50	6	F.5-F	2	-	1	106	177	172 9/16	17 10/16	3	0	1 10/16	4.00	2 3/16	0	1 7/16	1	50	7 5/8	3/4	1	12 7/16	9/16	27	1 1/8	2.56	4.240	4 1/4	-	-	-	-	12	-	7/16	12	7/16	15	14	17	-	-	-	-	-	-	-	-	-	-	-	-	-	7/16	17	18	16	-	-	**	-	-	0.38"	-	-	1843	1843
CB-5.50	BRB-5.50	6	F-E.5	2	-	1	106	177	172 9/16	17 10/16	3	0	1 10/16	4.00	2 3/16	0	1 7/16	1	50	7 5/8	3/4	1	12 7/16	9/16	27	1 1/8	2.56	4.240	4 1/4	-	-	-	-	12	-	7/16	12	7/16	15	14	17	-	-	-	-	-	-	-	-	-	-	-	-	-	7/16	17	18	16	-	-	**	-	-	0.38"	-	-	1843	1843
CB-5.50	BRB-5.50	6	E.5-E	2	-	1	106	177	172 9/16	17 10/16	3	0	1 10/16	4.00	2 3/16	0	1 7/16	1	50	7 5/8	3/4	1	12 7/16	9/16	27	1 1/8	2.56	4.240	4 1/4	-	-	-	-	12	-	7/16	12	7/16	15	14	17	-	-	-	-	-	-	-	-	-	-	-	-	-	7/16	17	18	16	-	-	**	-	-	0.25"	-	-	1843	1843
CB-5.50	BRB-5.50	6	G-F.5	1	-	1	106	183	177 7/16	18 1/16	3	0	1 10/16	4.00	2 3/16	0	1 7/16	1	50	7 5/8	3/4	1	12 7/16	9/16	27	1 1/8	2.56	4.240	4 1/4	-	-	-	-	12	-	5/16	12	7/16	25	14	27	-	-	-	-	-	-	-	-	-	-	-	-	-	7/16	16	17	16	-	-	**	-	-	0.25"	-	-	1898	1898
CB-5.50	BRB-5.50	6	F.5-F	1	-	1	106	183	177 7/16	18 1/16	3	0	1 10/16	4.00	2 3/16	0	1 7/16	1	50	7 5/8	3/4	1	12 7/16	9/16	27	1 1/8	2.56	4.240	4 1/4	-	-	-	-	12	-	5/16	12	7/16	25	14	27	-	-	-	-	-	-	-	-	-	-	-	-	-	7/16	16	17	16	-	-	**	-	-	0.50"	-	-	1898	1898
CB-5.50	BRB-5.50	6	F-E.5	1	-	1	106	183	177 7/16	18 1/16	3	0	1 10/16	4.00	2 3/16	0	1 7/16	1	50	7 5/8	3/4	1	12 7/16	9/16	27	1 1/8	2.56	4.240	4 1/4	-	-	-	-	12	-	5/16	12	7/16	25	14	27	-	-	-	-	-	-	-	-	-	-	-	-	-	7/16	16	17	16	-	-	**	-	-	0.50"	-	-	1898	1898
CB-5.50	BRB-5.50	6	E.5-E	1	-	1	106	183	177 7/16	18 1/16	3	0	1 10/16	4.00	2 3/16	0	1 7/16	1	50	7 5/8	3/4	1	12 7/16	9/16	27	1 1/8	2.56	4.240	4 1/4	-	-	-	-	12	-	5/16	12	7/16	25	14	27	-	-	-	-	-	-	-	-	-	-	-	-	-	7/16	16	17	16	-	-	**	-	-	0.25"	-	-	1898	1898
CB-5.50	BRB-5.50	8	H-G	2	-	1	108	177	174 3/16	17	3	0	1 10/16	4.00	2 3/16	0	1 7/16	1	50	7 5/8	3/4	1	12 7/16	9/16	27	1 1/8	2.56	4.240	4 1/4	-	-	-	-	12	-	-	-	-	-	-	-	5/8	14	7/16	15	18	17	-	-	-	-	-	-	-	7/16	17	18	16	0.50"	CP	**	-	-	-	-	-	1861	1861
CB-5.50	BRB-5.50	8	G-F.5	2	-	1	108	177	173 13/16	17 5/16	3	0	1 10/16	4.00	2 3/16	0	1 7/16	1	50	7 5/8	3/4	1	12 7/16	9/16	27	1 1/8	2.56	4.240	4 1/4	-	-	-	-	12	-	7/16	12	7/16	15	14	17	-	-	-	-	-	-	-	-	-	-	-	-	-	7/16	17	18	16	-	-	**	-	-	0.38"	-	-	1857	1857
CB-5.50	BRB-5.50	8	F.5-F	2	-	1	108	177	173 13/16	17 5/16	3	0	1 10/16	4.00	2 3/16	0	1 7/16	1	50	7 5/8	3/4	1	12 7/16	9/16	27	1 1/8	2.56	4.240	4 1/4	-	-	-	-	12	-	7/16	12	7/16	15	14	17	-	-	-	-	-	-	-	-	-	-	-	-	-	7/16	17	18	16	-	-	**	-	-	0.38"	-	-	1857	1857
CB-5.50	BRB-5.50	8	F-E.5	2	-	1	108	177	173 13/16	17 5/16	3	0	1 10/16	4.00	2 3/16	0	1 7/16	1	50	7 5/8	3/4	1	12 7/16	9/16	27	1 1/8	2.56	4.240	4 1/4	-	-	-	-	12	-	7/16	12	7/16	15	14	17	-	-	-	-	-	-	-	-	-	-	-	-	-	7/16	17	18	16	-	-	**	-	-	0.25"	-	-	1857	1857
CB-5.50	BRB-5.50	8	H-G	1	-	1	108	183	179	17 7/16	3	0	1 10/16	4.00	2 3/16	0	1 7/16	1	50	7 5/8	3/4	1	12 7/16	9/16	27	1 1/8	2.56	4.240	4 1/4	-	-	-	-	12	-	-	-	-	-	-	-	7/16	14	7/16	24	18	26	-	-	-	-	-	-	-	7/16	16	17	16	-	CP	**	-	-	-	-	-	1916	1916
CB-5.50	BRB-5.50	8	G-F.5	1	-	1	108	183	178 10/16	17 13/16	3	0	1 10/16	4.00	2 3/16	0	1 7/16	1	50	7 5/8	3/4	1	12 7/16	9/16	27	1 1/8	2.56	4.240	4 1/4	-	-	-	-	12	-	5/16	12	7/16	25	14	27	-	-	-	-	-	-	-	-	-	-	-	-	-	7/16	16	17	16	-	-	**	-	-	0.50"	-	-	1912	1912
CB-5.50	BRB-5.50	8	F.5-F	1	-	1	108	183	178 10/16	17 13/16	3	0	1 10/16	4.00	2 3/16	0	1 7/16	1	50	7 5/8	3/4	1	12 7/16	9/16	27	1 1/8	2.56	4.240	4 1/4	-	-	-	-	12	-	5/16	12	7/16	25	14	27	-	-	-	-	-	-	-	-	-	-	-	-	-	7/16	16	17	16	-	-	**	-	-	0.50"	-	-	1912	1912
CB-5.50	BRB-5.50	8	F-E.5	1	-	1	108	183	178 10/16	17 13/16	3	0	1 10/16	4.00	2 3/16	0	1 7/16	1	50	7 5/8	3/4	1	12 7/16	9/16	27	1 1/8	2.56	4.240	4 1/4	-	-	-	-	12	-	5/16	12	7/16	25	14	27	-	-	-	-	-	-	-	-	-	-	-	-	-	7/16	16	17	16	-	-	**	-	-	0.25"	-	-	1912	1912
CB-3.00	BRB-3.00	H	8-8.25	2	-	1	80 2/16	177	157 5/16	21 15/16	2	0	1 10/16	5.00	2 1/16	0	1 7/16	3/4	50	7 3/8	1/2	3/4	9 6/16	6/16	21	1 1/8	1.81	3.490	3 1/2	-	8	-	-	-	-	1/4	10	1/4	17	12	19	-	-	-	-	-	-	-	-	-	-	-	-	-	5/16	12	13	13	-	-	**	-	-	-	-	-	1109	1109
CB-3.00	BRB-3.00	H	8.25-8.5	2	-	1	80 2/16	177	157 5/16	21 15/16	2	0	1 10/16	5.00	2 1/16	0	1 7/16	3/4	50	7 3/8	1/2	3/4	9 6/16	6/16	21	1 1/8	1.81	3.490	3 1/2	-	8	-	-	-	-	1/4	10	1/4	17	12	19	-	-	-	-	-	-	-	-	-	-	-	-	-	5/16	12	13	13	-	-	**	-	-	-	-	-	1109	1109
CB-3.00	BRB-3.00	H	8.5-8.75	2	-	1	80 2/16	177	157 5/16	21 15/16	2	0	1 10/16	5.00	2 1/16	0	1 7/16	3/4	50	7 3/8	1/2	3/4	9 6/16	6/16	21	1 1/8	1.81	3.490	3 1/2	-	8	-	-	-	-	1/4	10	1/4	17	12	19	-	-	-	-	-	-	-	-	-	-	-	-	-	5/16	12	13	13	-	-	**	-	-	-	-	-	1109	1109
CB-3.00	BRB-3.00	H	8.75-9	2	-	1	80 2/16	177	157 5/16	21 15/16	2	0	1 10/16	5.00	2 1/16	0	1 7/16	3/4	50	7 3/8	1/2	3/4	9 6/16	6/16	21	1 1/8	1.81	3.490	3 1/2	-	8	-	-	-	-	1/4	10	1/4	17	12	19	-	-	-	-	-	-	-	-	-	-	-	-	-	5/16	12	13	13	-	-	**	-	-	-	-	-	1109	1109
CB-3.00	BRB-3.00	H	8-8.25	1	-	1	80 2/16	183	162 4/16	22 9/16	2	0	1 10/16	5.00	2 1/16	0	1 7/16	3/4	50	7 3/8	1/2	3/4	9 6/16	6/16	21	1 1/8	1.81	3.490	3 1/2	-	8	-	-	-	-	1/4	10	1/4	27	12	29	-	-	-	-	-	-	-	-	-	-	-	-	-	5/16	12	13	13	-	-	**	-	-	-	-	-	1146	1146
CB-3.00	BRB-3.00	H	8.25-8.5	1	-	1	80 2/16	183	162 4/16	22 9/16	2	0	1 10/16	5.00	2 1/16	0	1 7/16	3/4	50	7 3/8	1/2	3/4	9 6/16	6/16	21	1 1/8	1.81	3.490	3 1/2	-	8	-	-	-	-	1/4	10	1/4	27	12	29	-	-	-	-	-	-	-	-	-	-	-	-	-	5/16	12	13	13	-	-	**	-	-	0.25"	-	-	1146	1146
CB-3.00	BRB-3.00	H	8.5-8.75	1	-	1	80 2/16	183	162 4/16	22 9/16	2	0	1 10/16	5.00	2 1/16	0	1 7/16	3/4	50	7 3/8	1/2	3/4	9 6/16	6/16	21	1 1/8	1.81	3.490	3 1/2	-	8	-	-	-	-	1/4	10	1/4	27	12	29	-	-	-	-	-	-	-	-	-	-	-	-	-	5/16	12	13	13	-	-	**	-	-	0.25"	-	-	1146	1146
CB-3.00	BRB-3.00	H	8.75-9	1	-	1	80 2/16	183	162 4/16	22 9/16	2	0	1 10/16	5.00	2 1/16	0	1 7/16	3/4	50	7 3/8	1/2	3/4	9 6/16	6/16	21	1 1/8	1.81	3.490	3 1/2	-	8	-	-	-	-	1/4	10	1/4	27	12	29	-	-	-	-	-	-	-	-	-	-	-	-	-	5/16	12	13	13	-	-	**	-	-	-	-	-	1146	1146
CB-5.50	BRB-5.50	9	E-D.5	2	-	1	85	177	160	21 1/16	3	0	1 10/16	4.00	2 3/16	0	1 7/16	1	50	7 5/8	3/4	1	12 7/16	9/16	27	1 1/8	2.56	4.240	4 1/4	-	-	-	-	12	-	7/16	12	3/8	19	14	21	-	-	-	-	-	-	-	-	-	-	-	-	-	1/2	14	15	16	-	-	**	-	-	-	-	-	1701	1701
CB-5.50	BRB-5.50	9	D.5-D	2	-	1	85	177	160	21 1/16	3	0	1 10/16	4.00	2 3/16	0	1 7/16	1	50	7 5/8	3/4	1	12 7/16	9/16	27	1 1/8	2.56	4.240	4 1/4	-	-	-	-	12	-	7/16	12	3/8	19	14	21	-	-	-	-	-	-	-	-	-	-	-	-	-	1/2	14	15	16	-	-	**	-	-	0.38"	-	-	1701	1701
CB-5.50	BRB-5.50	9	D-C.6	2	-	1	74 8/16	177	153 7/16	23 10/16	3	0	1 10/16	4.00	2 3/16	0	1 7/16	1	50	7 5/8	3/4	1	12 7/16	9/16	27	1 1/8	2.56	4.240	4 1/4	-	-	-	-	12	-	3/8	12	5/16	22	14	24	-	-	-	-	-	-	-	-	-	-	-	-	-	1/2	13	14	16	-	-	**	-	-	0.38"	-	-	1626	1626
CB-5.50	BRB-5.50	9	C.6-C.2	2	-	1	74 8/16	177	153 15/16	23 2/16	3	0	1 10/16	4.00	2 3/16	0	1 7/16	1	50	7 5/8	3/4	1	12 7/16	9/16	27	1 1/8	2.56	4.240	4 1/4	-	-	-	-	12	-	-	-	-	-	-	-	1/2	13	5/16	22	17	24	-	-	-	-	-	-	-	1/2	13	14	16	-	CP	**	-	-	-	-	-	1632	1632
CB-5.50	BRB-5.50	9	E-D.5	1	-	1	85	183	164 14/16	21 11/16	3	0	1 10/16	4.00	2 3/16	0	1 7/16	1	50	7 5/8	3/4	1	12 7/16	9/16	27	1 1/8	2.56	4.240	4 1/4	-	-	-	-	12	-	5/16	12	3/8	29	14	31	-	-	-	-	-	-	-	-	-	-	-	-	-	7/16	14	15	16	-	-	**	-	-	0.25"	-	-	1756	1756
CB-5.50	BRB-5.50	9	D.5-D	1	-	1	85	183	164 14/16	21 11/16	3	0	1 10/16	4.00	2 3/16	0	1 7/16	1	50	7 5/8	3/4	1	12 7/16	9/16	27	1 1/8	2.56	4.240	4 1/4	-	-	-	-	12	-	5/16	12	3/8	29	14	31	-	-	-	-	-	-	-	-	-	-	-	-	-	7/16	14	15	16	-	-	**	-	-	0.38"	-	-	1756	1756
CB-5.50	BRB-5.50	9	D-C.6	1	-	1	74 8/16	183	158 6/16	24 6/16	3	0	1 10/16	4.00	2 3/16	0	1 7/16	1	50	7 5/8	3/4	1	12 7/16	9/16	27	1 1/8	2.56	4.240	4 1/4	-	-	-	-	12	-	5/16	12	3/8	32	14	34	-	-	-	-	-	-	-	-	-	-	-	-	-	7/16	13	14	16	-	-	**	-	-	0.38"	-	-	1682	1682
CB-5.50	BRB-5.50	9	C.6-C.2	1	-	1	74 8/16	183	158 14/16	23 13/16	3	0	1 10/16	4.00	2 3/16	0	1 7/16	1	50	7 5/8	3/4	1	12 7/16	9/16	27	1 1/8	2.56	4.240	4 1/4	-	-	-	-	12	-	-	-	-	-	-	-	3/8	13	3/8	31	17	33	-	-	-	-	-	-	-	7/16	13	14	16	-	CP	**	-	-	-	-	-	1688	1688
CB-5.50	BRB-5.50	C.2	8-8.4	2	-	1	106 13/16	177	168	17 8/16	3	0	1 10/16	4.00	2 3/16	0	1 7/16	1	50	7 5/8	3/4	1	12 7/16	9/16	27	1 1/8	2.56	4.240	4 1/4	-	-	-	-	12	-	11/16	12	9/16	15	14	17	-	-	-	-	-	-	7/16	13	3/8	16	yes	16	20	-	-	-	-	0.50"	-	-	-	-	0.25"	-	0.25"	1791	1791
CB-5.50	BRB-5.50	C.2	8-8.4	1	-	1	106 13/16	183	172 15/16	17 15/16	3	0	1 10/16	4.00	2 3/16	0	1 7/16	1	50	7 5/8	3/4	1	12 7/16	9/16	27	1 1/8	2.56	4.240	4 1/4	-	-	-	-	12	-	5/16	12	7/16	25	14	27	-	-	-	-	-	-	5/8	13	1/2	17	yes	16	20	-	-	-	-	-	-	0.50"	-	-	0.25"	-	0.25"	1847	1847
CB-5.50	BRB-5.50	C.2	8.6-9	2	-	1	106 13/16	177	168	17 8/16	3	0	1 10/16	4.00	2 3/16	0	1 7/16	1	50	7 5/8	3/4	1	12 7/16	9/16	27	1 1/8	2.56	4.240	4 1/4	-	-	-	-	12	-	11/16	12	9/16	15	14	17	-	-	-	-	-	-	7/16	13	3/8	16	yes	16	20	-	-	-	-	0.50"	-	-	-	-	0.25"	-	0.25"	1791	1791
CB-5.50	BRB-5.50	C.2	8.6-9	1	-	1	106 13/16	183	172 15/16	17 15/16	3	0	1 10/16	4.00	2 3/16	0	1 7/16	1	50	7 5/8	3/4	1	12 7/16	9/16	27	1 1/8	2.56	4.240	4 1/4	-	-	-	-	12	-	5/16	12	7/16	25	14	27	-	-	-	-	-	-	5/8	13	1/2	17	yes	16	20	-	-	-	-	-	-	0.50"	-	-	0.25"	-	0.25"	1847	1847
CB-5.50	BRB-5.50	1	G-F.5	2	-	1	106	177	172 9/16	17 10/16	3	0	1 10/16	4.00	2 3/16	0	1 7/16	1	50	7 5/8	3/4	1	12 7/16	9/16	27	1 1/8	2.56	4.240	4 1/4	-	-	-	-	12	-	7/16	12	7/16	15	14	17	-	-	-	-	-	-	-	-	-	-	-	-	-	7/16	17	18	16	-	-	**	-	-	0.25"	-	-	1843	1843
CB-5.50	BRB-5.50	1	F.5-F	2	-	1	106	177	172 9/16	17 10/16	3	0	1 10/16	4.00	2 3/16	0	1 7/16	1	50	7 5/8	3/4	1	12 7/16	9/16	27	1 1/8	2.56	4.240	4 1/4	-	-	-	-	12	-	7/16	12	7/16	15	14	17	-	-	-	-	-	-	-	-	-	-	-	-	-	7/16	17	18	16	-	-	**	-	-	0.38"	-	-	1843	1843
CB-5.50	BRB-5.50	1	F-E.5	2	-	1	106	177	172 9/16	17 10/16	3	0	1 10/16	4.00	2 3/16	0	1 7/16	1	50	7 5/8	3/4	1	12 7/16	9/16	27	1 1/8	2.56	4.240	4 1/4	-	-	-	-	12	-	7/16	12	7/16	15	14	17	-	-	-	-	-	-	-	-	-	-	-	-	-	7/16	17	18	16	-	-	**	-	-	0.38"	-	-	1843	1843
CB-5.50	BRB-5.50	1	E.5-E	2	-	1	106	177	172 9/16	17 10/16	3	0	1 10/16	4.00	2 3/16	0	1 7/16	1	50	7 5/8	3/4	1	12 7/16	9/16	27	1 1/8	2.56	4.240	4 1/4	-	-	-	-	12	-	7/16	12	7/16	15	14	17	-	-	-	-	-	-	-	-	-	-	-	-	-	7/16	17	18	16	-	-	**	-	-	0.25"	-	-	1843	1843
CB-6.00	BRB-6.00	1	G-F.5	1	-	1	106	183	177 7/16	18 1/16	4	0	1 10/16	4.00	2 3/16	0	1 7/16	1	50	7 5/8	3/4	1	16 7/16	8/16	35	1 1/8	2.56	4.240	4 1/4	-	-	-	-	16	-	5/16	14	3/8	28	16	30	-	-	-	-	-	-	-	-	-	-	-	-	-	3/8	18	19	19	-	-	**	-	-	0.25"	-	-	1866	1866
CB-6.00	BRB-6.00	1	F.5-F	1	-	1	106	183	177 7/16	18 1/16	4	0	1 10/16	4.00	2 3/16	0	1 7/16	1	50	7 5/8	3/4	1	16 7/16	8/16	35	1 1/8	2.56	4.240	4 1/4	-	-	-	-	16	-	5/16	14	3/8	28	16	30	-	-	-	-	-	-	-	-	-	-	-	-	-	3/8	18	19	19	-	-	**	-	-	0.50"	-	-	1866	1866
CB-6.00	BRB-6.00	1	F-E.5	1	-	1	106	183	177 7/16	18 1/16	4	0	1 10/16	4.00	2 3/16	0	1 7/16	1	50	7 5/8	3/4	1	16 7/16	8/16	35	1 1/8	2.56	4.240	4 1/4	-	-	-	-	16	-	5/16	14	3/8	28	16	30	-	-	-	-	-	-	-	-	-	-	-	-	-	3/8	18	19	19	-	-	**	-	-	0.50"	-	-	1866	1866
CB-6.00	BRB-6.00	1	E.5-E	1	-	1	106	183	177 7/16	18 1/16	4	0	1 10/16	4.00	2 3/16	0	1 7/16	1	50	7 5/8	3/4	1	16 7/16	8/16	35	1 1/8	2.56	4.240	4 1/4	-	-	-	-	16	-	5/16	14	3/8	28	16	30	-	-	-	-	-	-	-	-	-	-	-	-	-	3/8	18	19	19	-	-	**	-	-	0.25"	-	-	1866	1866
																														0	64	0	0	640	0																																103,257 lbs 51.63 Ton

Note: May Dbl Count Stiffeners.
Indicated Thickness Each Side of Column. Weld Stiffener to FL and Web with 5/16" fillet welds for t ≤ 1.25", 7/16" for t ≤ 2.0"
CP = Cont Plate & Guss Stiff PL
** = Stiffener PL Req'd Per Detail (Chev or V Location)

Doublers to be full-height, UNO. May Double Count Doublers. Use larger size if Multiple Doublers Called for in Same Location (V vs Chev).

t_{Dblr} = Doubler plate thickness 1 side of web, or 1/2 the indicated thickness both sides of web.

Table of Symbols

- W_{WP} = Width of frame bay workpoint (WP) to WP
- H_{WP} = Height of frame bay WP to WP
- L_{bh} = Length of CoreBrace between outermost holes
- L_{wp-h} = Length from bottom WP to center of bottom bolt hole
- n_i = Number of bolts in inner row
- n_o = Number of bolts in outer row
- **e** = Typical bolt edge distance
- **s** = Bolt spacing in a row
- g_i = Gauge inner bolt row from CL of CB
- g_o = Gauge between inner and outer bolt rows
- d_{hg} = Diameter of bolt hole in gusset plate
- t_g = Thickness of gusset
- $F_{y,g}$ = Gusset A572 grade
- W_L = Width of lug
- t_L = Thickness of Lug
- t_s = Thickness of Stiffener on Lug
- L_{Lg} = Expected Lap of Lug on Gusset (as Check Only)
- W_{L-Alt} = Size of alternate weld at lug to gusset if bolt holes do not align
- L_{WL-Alt} = Minimum required length of alternate weld at each lug
- d_b = Bolt diameter (ASTM F3125 Gr A490/F2280)
- **G** = Grip of bolt
- **L'** = Length of bolt needed with F436 washer only
- **La** = Suggested length of bolt to order, detailer to verify
- W_b = Minimum size of gusset weld to beam
- L_{wb} = Minimum length of beam weld
- W_c = Minimum size of gusset weld to column
- L_{wc} = Minimum length of column weld
- **z** = Length at each end of V/Chev gusset for increased weld size. Use 3/4*tg weld size in this region.
- L_{gb} = Approximate maximum width of gusset rounded up to nearest inch (At V or Chev, equal to 1/2 gusset width)
- L_{gc} = Approximate maximum height of gusset rounded up to nearest inch
- **Ext** = If yes, see "extended" gusset detail

COREBRACE GUSSET CONNECTION SCHEDULE (2)
SCALE:NTS

IDENTIFICATION STAMP
DIV. OF THE STATE ARCHITECT
APP. 03-119458 INC:
REVIEWED FOR
SS ☑ FLS ☑ ACS ☑
DATE: 05/23/2019

DIVISION OF STATE ARCHITECT
355 South Grand Avenue, Suite 2100
Los Angeles, California. 90012
ph: (213) 897-3995 Fax: (213) 897-3159
agency

tBP
architecture
planning
interiors

tBP/Architecture
4611 Teller Avenue
Newport Beach, CA 92660
ph: 949.673.0300 fx: 949.732.3895
architect

VCA ENGINEERS INC
CIVIL • STRUCTURAL
2151 Michelson Dr. #240
Irvine, CA 92612
Tel. 949.679.0870
Fax. 949.679.9370
Project No.: E358

REGISTERED PROFESSIONAL ENGINEER
YOUNG-KEUN NAM
No. S4029
Exp. 9/30/20
STRUCTURAL
STATE OF CALIFORNIA
consultant

COMPTON COLLEGE
INSTRUCTIONAL BUILDING No. 2
COMPTON COMMUNITY COLLEGE DISTRICT
1111 E. ARTESIA BLVD. COMPTON, CA.
owner

tBP project number : 20998.00
file name:
drawn by: checked by:
date: 04/08/19
Rev: date: description:

THIS DRAWING AND THE DESIGNS, DEPICTIONS, IDEAS AND OTHER INFORMATION CONTAINED HEREIN CONSTITUTE UNPUBLISHED WORK OF tBP/ARCHITECTURE AND SHALL REMAIN THE PROPERTY OF tBP/ARCHITECTURE IN PERPETUITY. NO PART THEREOF SHALL BE REPRODUCED, DISCLOSED, DISTRIBUTED, SOLD, PUBLISHED OR OTHERWISE USED IN ANY WAY WITHOUT THE ADVANCED EXPRESS WRITTEN CONSENT OF tBP/ARCHITECTURE.

drawing title:
BRBF DETAILS

drawing no.:
S0-1.11B
drawing of

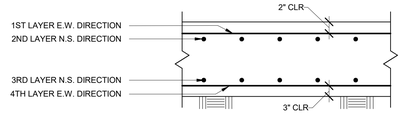

MAT FTG REINF. LAYOUT

MAT FOUNDATION NOTES:

1. FOR GENERAL NOTES, SEE S0-0.0 SERIES.
2. FOR TYPICAL DETAILS, SEE S0-1.0 SERIES.
3. SEE DETAIL ON SHEETS S0-1.3, S0-1.3A AND S0-1.4 FOR ALL INTERIOR METAL STUDS WALL CONSTRUCTION.
4. UNDERGROUND UTILITY NOTE:
   CONTRACTOR SHALL COORDINATE ALL NEW AND EXISTING UTILITIES PRIOR TO ANY FOUNDATION WORK.
   STEP FOOTINGS AS REQUIRED PER DETAIL 6/S0-1.2 & 7/S0-1.2
5. GB-# INDICATES GRADE BEAM. SEE GRADE BEAM SCHEDULE FOR ADDITIONAL INFO.

MARK	WIDTH	DEPTH (MIN)	TOP BARS	BOTTOM BARS (SEE ELEV. FOR 2ND LEYER)	TIES
GB-1	16"	54"	(3) #10	(3) #10	#4 @ 6"O/C
GB-2		54"	(3) #10	(3) #10	#4 @ 6"O/C
GB-3	18"	54"	(3) #10	(3) #10	#4 @ 6"O/C
GB-4	16"	54"	(3) #10	(3) #10	#4 @ 6"O/C
GB-5		54"	(3) #10	(3) #10	#4 @ 6"O/C
GB-6		54"	(3) #10	(3) #10	#4 @ 6"O/C
GB-7		54"	(3) #10	(3) #10	#4 @ 6"O/C
GB-8		54"	(3) #10	(3) #10	#4 @ 6"O/C
GB-9		54"	(3) #10	(3) #10	#4 @ 6"O/C

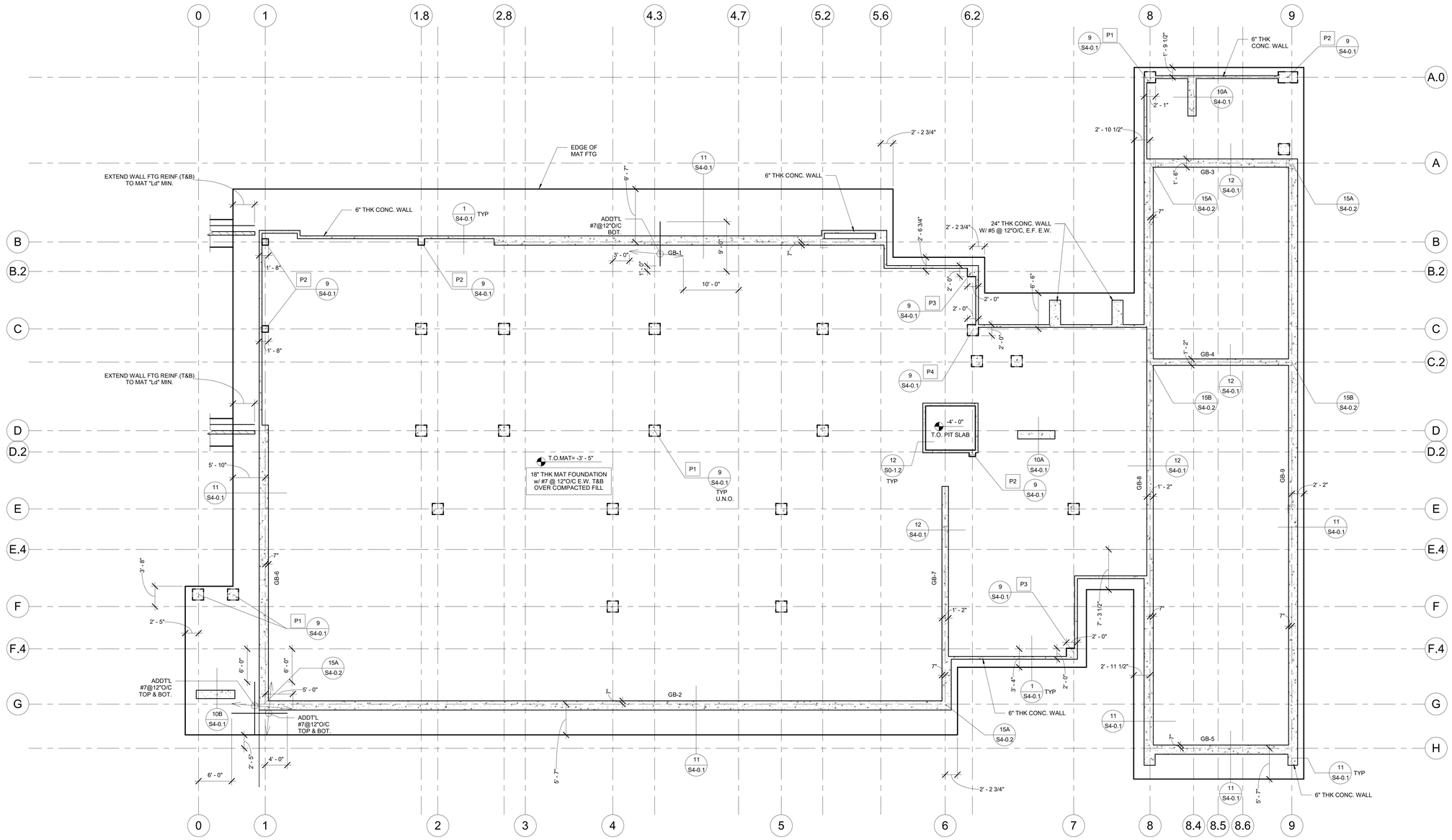

1 FOUNDATION PLAN
SCALE: 1/8" = 1'-0"

4/8/2019 7:03:40 PM

IDENTIFICATION STAMP
DIV. OF THE STATE ARCHITECT
APP. 03-119458 INC:
REVIEWED FOR
SS ☑ FLS ☑ ACS ☑
DATE:05/23/2019

DIVISION OF THE STATE ARCHITECT
355 South Grand Avenue, Suite 2100
Los Angeles, CA 90012
ph: (213) 897-3995 fx:(213) 897-3159

agency

tBP
architecture
planning
interiors

tBP/Architecture
4611 Teller Avenue
Newport Beach, CA 92660
ph: 949.673.0300 fx: 949.732.3895

architect

VCA ENGINEERS INC
CIVIL ★ STRUCTURAL
2151 Michelon Dr. #240
Irvine, CA 92612
Tel. 949.679.0870
Fax. 949.679.9370
Project No.: E358

REGISTERED PROFESSIONAL ENGINEER
Exp. 9/30/20
STATE OF CALIFORNIA

consultant

COMPTON COLLEGE
INSTRUCTIONAL BUILDING No.2
COMPTON COMMUNITY COLLEGE DISTRICT
1111 E. ARTESIA BLVD. COMPTON, CA.

owner

tBP project number: 20998.00
file name:
drawn by: checked by:
date: 04 / 08 / 2019

rev:	date:	description:

THIS DRAWING AND THE DESIGNS, DEPICTIONS, IDEAS AND OTHER INFORMATION CONTAINED HEREIN CONSTITUTE UNPUBLISHED WORK BY tBP/ARCHITECTURE AND SHALL REMAIN PROPERTY OF tBP/ARCHITECTURE IN PERPETUITY. NO PART THEREOF SHALL BE REPRODUCED, DISCLOSED, DISTRIBUTED, SOLD, PUBLISHED OR OTHERWISE USED IN ANY WAY WITHOUT THE ADVANCED EXPRESS WRITTEN CONSENT OF tBP/ARCHITECTURE.

drawing title:
MAT SLAB PLAN

drawing no.:
S2-1
drawing of

FOUNDATION NOTES:

1. FOR GENERAL NOTES, SEE S0-0.0 SERIES.
2. FOR TYPICAL DETAILS, SEE S0-1.0 SERIES.
3. SEE DETAIL ON SHEETS S0-1.3, S0-1.3A AND S0-1.4 FOR ALL INTERIOR METAL STUDS WALL CONSTRUCTION.
4. DRAWING DATUM = 0'-0": REF. ELEV. +/6250.00' @ GROUND FLOOR FINISH FLOOR (SEE CIVIL & ARCH FOR ACTUAL ELEVATION).
5. SLAB SHALL BE UNDERLAYED BY 15 MIL VAPOR BARRIER OVER 4" CLEAN AGGREGATE (OR 4" CLEAN SAND) OVER COMPACTED FILL. CONTACTOR TO PROTECT VAPOR BARRIER FROM PUNTURE.
6. NOT USED.
7. FOR GRAVITY BASE PLATE DETAIL CALLOUT, SEE DETAIL 2 / S0-1.7
8. FOR SLAB SAWCUT AND CONTROL JOINT, SEE DETAIL 16 / S0-1.1
9. UNDERGROUND UTILITY NOTE:
   CONTRACTOR SHALL COORDINATE ALL NEW AND EXISTING UTILITIES PRIOR TO ANY FOUNDATION WORK.
   STEP FOOTINGS AS REQUIRED PER DETAIL 6 / S0-1.2 & 7 / S0-1.2
10. NOT USED.
11. INDICATES DEPRESSED SLAB. SEE DETAIL 9 / S0-1.1. REFER TO ARCHT'L DRAWINGS FOR ADDITIONAL INFORMATION.
12. SHOWS ELEVATION OF STEEL FRAME.

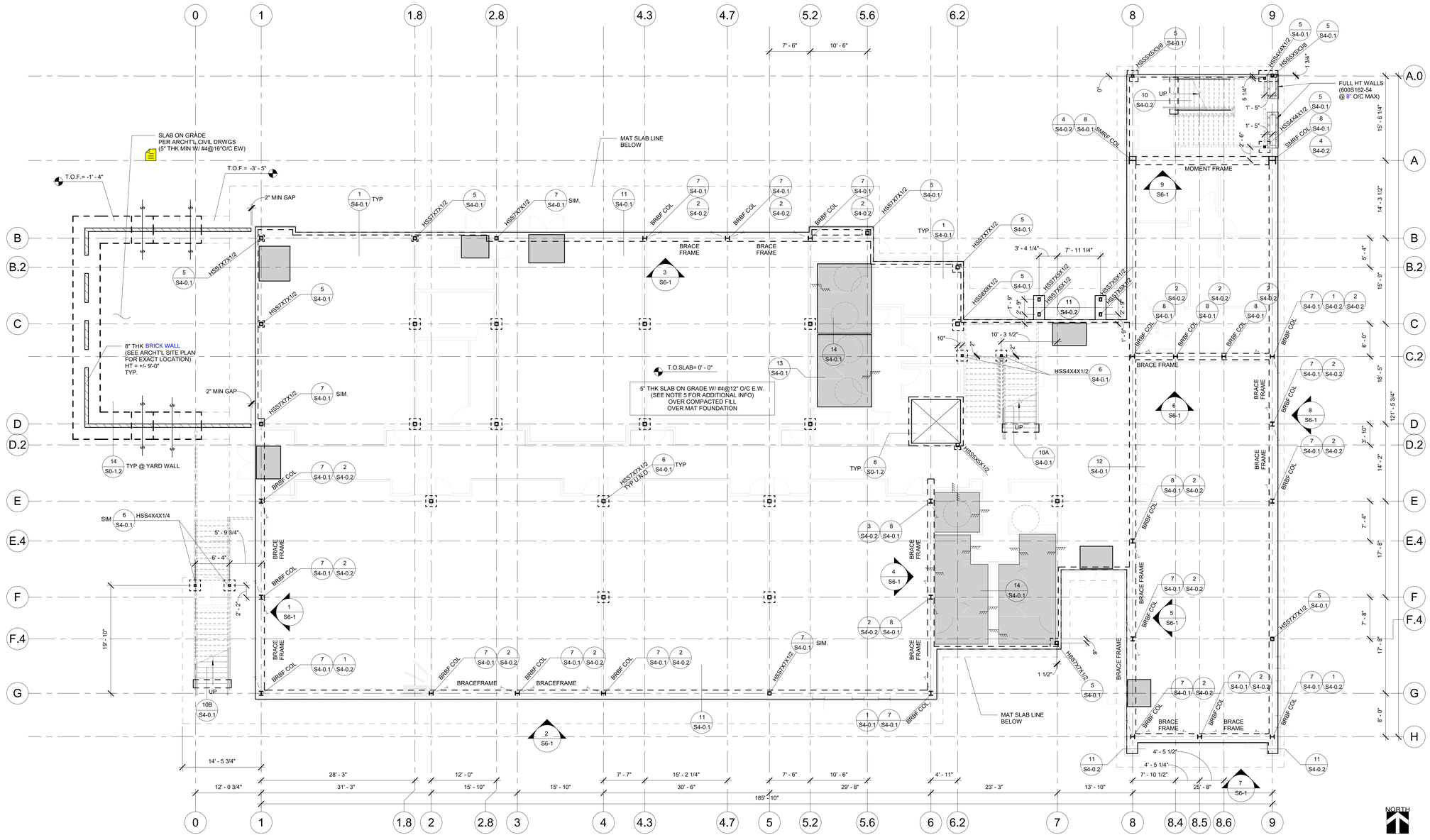

1 GROUND FLOOR SLAB PLAN
SCALE: 1/8" = 1'-0"

4/8/2019 7:03:41 PM

IDENTIFICATION STAMP
DIV. OF THE STATE ARCHITECT
APP. 03-119458 INC:
REVIEWED FOR
SS ☑ FLS ☑ ACS ☑
DATE:05/23/2019

DIVISION OF THE STATE ARCHITECT
355 South Grand Avenue, Suite 2100
Los Angeles, CA 90012
ph: (213) 897-3995 fx:(213) 897-3159
agency

tBP
architecture
planning
interiors

tBP/Architecture
4611 Teller Avenue
Newport Beach, CA 92660
ph: 949.673.0300 fx: 949.732.3895
architect

VCA ENGINEERS INC
CIVIL ★ STRUCTURAL
2151 Michelson Dr. #240
Irvine, CA 92612
Tel. 949.679.0870
Fax. 949.679.9370
Project No.: E358
PROFESSIONAL ENGINEER Exp. 9/30/20 STRUCTURAL STATE OF CALIFORNIA
consultant

COMPTON COLLEGE
INSTRUCTIONAL BUILDING No.2
COMPTON COMMUNITY COLLEGE DISTRICT
1111 E. ARTESIA BLVD. COMPTON, CA.
owner

tBP project number: 20998.00
file name:
drawn by: checked by:
date: 04 / 08 / 2019

rev:	date:	description:

THIS DRAWING AND THE DESIGNS, DEPICTIONS, IDEAS AND OTHER INFORMATION CONTAINED HEREIN CONSTITUTE UNPUBLISHED WORK OF tBP/ARCHITECTURE AND SHALL REMAIN PROPERTY OF tBP/ARCHITECTURE IN PERPETUITY. NO PART THEREOF SHALL BE REPRODUCED, DISCLOSED, DISTRIBUTED, SOLD, PUBLISHED OR OTHERWISE USED IN ANY WAY WITHOUT THE ADVANCED EXPRESS WRITTEN CONSENT OF tBP/ARCHITECTURE.

drawing title: GROUND FLOOR SLAB PLAN

drawing no.: S2-2
drawing of

FLOOR FRAMING NOTES:

1. FOR GENERAL NOTES, SEE S0-0.0 SERIES.
2. FOR TYPICAL DETAILS, SEE S0-1.0 SERIES.
3. METAL DECK(SEE SCHEDULE BELOW). SEE 1/S0-1.5 FOR ADDITIONALINFORMATION.

METAL DECK SCHEDULE

DECK MARK	TYPE	GAGE	I (IN4/FT)	S (TOP +) (IN3/FT)	S (BOT -) (IN3/FT)	TOTAL DEPTH(IN)	CONC FILL TYPE	REINF.	WELDED STUDS
D1	VERCO W3 IAPMO 0217	18	1.213	0.752	0.768	5 1/2"	LWC	#3@12"O/C E.W.	3/4 DIAM. X 5" LONG @12"O/C
D2	VERCO W2 IAPMO 0217	18	1.213	0.752	0.768	4 1/2"	LWC	#3@12"O/C E.W.	3/4 DIAM. X 4" LONG @12"O/C

4. NOT USED
5. FOR TYPICAL BEAM TO BEAM CONNECTIONS, SEE DETAIL 13/S0-1.7
6. CANTILEVER BEAM MOMENT CONNECTION SEE DETAIL 1/S0-1.8
   SMRF CONNECTION SEE FRAME ELEVATION. 1/S0-1.9
7. COLUMNS : SEE FLRS BELOW FOR SIZES NOT NOTED HERE IN.
8. BEAM SPLICE. SEE DETAIL 9/S0-1.8
9. INDICATES BOLT CONNECTION AT SLRS SEE DETAIL 12/S0-1.7
   INDICATES (2) ROWS OF A490SC
   NDICATES (1) ROW OF A490SC,
10. INDICATES DEPRESSED SLAB. SEE DETAIL 3/S0-1.6 REFER TO ARCHT'L DRAWINGS FOR ADDITIONAL INFORMATION.
   * NEXT TO BM SIZE INDICATES LOWERED BEAM AROUND DEPRESSED AREA SEE 8/S0-1.7 FOR BEAM W/ T SECTION.
11. ALL STEEL BEAMS SHALL HAVE WELDED STUDS. SEE DETAIL 8/S0-1.8
12. NOT USED.
13. FRAME OPENING FOR DRAINS AT LOW ROOF PER DETAIL 9/S0-1.5
14. FOR LOW ROOF SLOPE, REFER TO ARCHT'L ROOF PLAN ON SHEET A1-7.1 AND A1-7.2
15. SHOWS ELEVATION OF STEEL MOMENT FRAME.
16. INDICATES EXTERIOR WALL ELEVATION
17. INDICATES STEEL BEAM PENETRATION. SEE DETAIL 13/S0-1.8
18. DENOTES FOLLOR/ROOF PENETRATION.SEE DETAIL 9/S0-1.5 SEE ARCHT'L /MEP DRAWINGS FOR ACTUAL LOCATION ANDADDITION INFO AND ADDITIONAL PENETRATIONS.

1 2ND FLOOR FRAMING PLAN
SCALE: 1/8" = 1'-0"

4/8/2019 7:03:50 PM

IDENTIFICATION STAMP
DIV. OF THE STATE ARCHITECT
APP. 03-119458 INC:
REVIEWED FOR
SS ☑ FLS ☑ ACS ☑
DATE:05/23/2019

DIVISION OF THE STATE ARCHITECT
355 South Grand Avenue, Suite 2100
Los Angeles, CA 90012
ph: (213) 897-3995 fx:(213) 897-3159
agency

tBP architecture planning interiors
tBP/Architecture
4611 Teller Avenue
Newport Beach, CA 92660
ph: 949.673.0300 fx: 949.732.3895
architect

VCA ENGINEERS INC
CIVIL • STRUCTURAL
2151 Michelson Dr. #240
Irvine, CA 92612
Tel. 949.679.0870
Fax. 949.679.9370
Project No.: E358
PROFESSIONAL ENGINEER YOUNG-KEUN NAM No. S4029 Exp. 9/30/20 STRUCTURAL STATE OF CALIFORNIA
consultant

COMPTON COLLEGE
INSTRUCTIONAL BUILDING No.2
COMPTON COMMUNITY COLLEGE DISTRICT
1111 E. ARTESIA BLVD. COMPTON, CA.
owner

tBP project number: 20998.00
file name:
drawn by: checked by:
date: 04 / 08 / 2019
rev: date: description:

THIS DRAWING AND THE DESIGNS, DEPICTIONS, IDEAS AND OTHER INFORMATION CONTAINED HEREIN CONSTITUTE UNPUBLISHED WORK OF tBP/ARCHITECTURE AND SHALL REMAIN PROPERTY OF tBP/ARCHITECTURE IN PERPETUITY. NO PART THEREOF SHALL BE REPRODUCED, DISCLOSED, DISTRIBUTED, SOLD, PUBLISHED OR OTHERWISE USED IN ANY WAY WITHOUT THE ADVANCED EXPRESS WRITTEN CONSENT OF tBP/ARCHITECTURE.

drawing title:
2ND FLOOR FRAMING PLAN

drawing no.:
S3-1
drawing of

ROOF FRAMING NOTES:

1. FOR GENERAL NOTES, SEE S0-0.0 SERIES.
2. FOR TYPICAL DETAILS, SEE S0-1.0 SERIES.
3. METAL DECK. SEE (1 / S0-1.5) FOR ADDITIONAL INFORMATION.

METAL DECK SCHEDULE

DECK MARK	TYPE	GAGE	I (IN4/FT)	S (TOP +) (IN3/FT)	S (BOT -) (IN3/FT)	TOTAL DEPTH(IN)	CONC FILL TYPE	REINF.	WELDED STUDS
D1	VERCO W3 IAPMO 0217	18	1.213	0.752	0.768	5 1/2"	LWC	#3@12"O/C E.W.	3/4 DIAM. X 5" LONG @12"O/C
D2	VERCO W2 IAPMO 0217	18	1.213	0.752	0.768	4 1/2"	LWC	#3@12"O/C E.W.	3/4 DIAM. X 4" LONG @12"O/C

4. TOS = VARIES. VERIFY WITH ARCHT'L DRAWINGS. REFER TO ARCHT'L FOR ROOF SLOPES. T.O.S NOTED AT RIDGE, BALANCE VERIFY WITH ARCHIT'L SLOPE/ELEVATIONS AND TOTAL SLAB THICKNESS.
5. FOR TYPICAL BEAM TO BEAM CONNECTIONS, SEE DETAIL (13 / S0-1.7)
6. CANTILEVER BEAM MOMENT CONNECTION SEE DETAIL (1 / S0-1.8)
   SMRF CONNECTION SEE FRAME ELEVATION. (1 / S0-1.9)
7. HSS COLUMNS: SEE FLOOR BELOW FOR SIZES NOT INDICATED HEREIN.
8. INDICATES BOLT CONNECTION AT SLRS SEE DETAIL (12 / S0-1.7)
   INDICATES (2) ROWS OF A490SC
   NDICATES (1) ROW OF A490SC,
9. INDICATES LOCATION OF MECH UNIT CONC PAD. REFER TO MECH AND ARCH DWGS FOR ADDITIONAL INFO.
   FOR AHU UNIT, SEE (10 / S0-1.6) FOR CONDENSING UNIT, SEE (9 / S0-1.6)
10. FRAME OPENING IN ROOF FOR SKYLIGHTS,SOLAR TUBES & ROOF DRAINS PER DETAIL (9 / S0-1.5)
11. INDICATES PIPE @ MECH SCREEN SEE DETAIL (8 / S5-0.2)
12. ALL STEEL BEAMS SHALL HAVE WELDED STUDS. SEE DETAIL (8 / S0-1.8)
13. SHOWS ELEVATION OF STEEL MOMENT FRAME.
14. DENOTES FLOOR/ROOF PENETRATION.SEE DETAIL SEE ARCHT'L /MEP DRAWINGS FOR ACTUAL LOCATION ANDADDITION INFO AND ADDITIONAL PENETRATIONS.

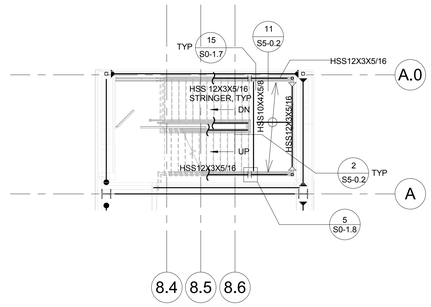

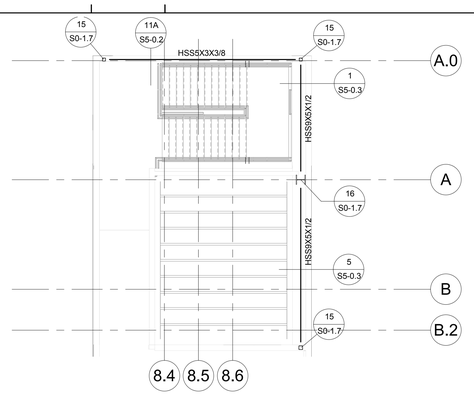

2 2ND FLOOR LANDING PLAN
SCALE: 1/8" = 1'-0"

3 PARAPET FRAMING PLAN
SCALE: 1/8" = 1'-0"

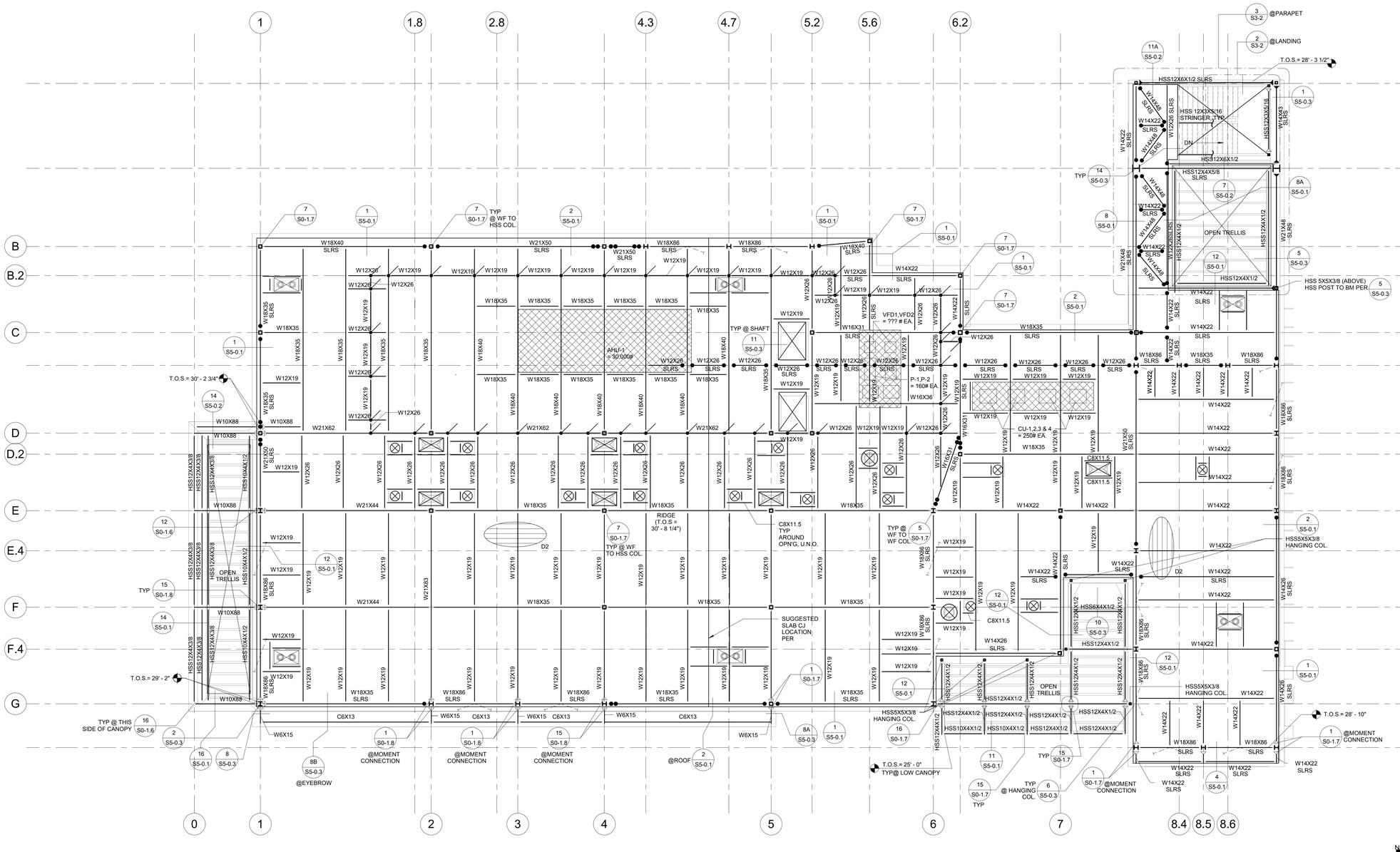

1 ROOF FRAMING PLAN
SCALE: 1/8" = 1'-0"

IDENTIFICATION STAMP
DIV. OF THE STATE ARCHITECT
APP. 03-119458 INC:
REVIEWED FOR
SS ☑ FLS ☑ ACS ☑
DATE:05/23/2019

DIVISION OF THE STATE ARCHITECT
355 South Grand Avenue, Suite 2100
Los Angeles, CA 90012
ph: (213) 897-3995 fx:(213) 897-3159

agency

tBP architecture planning interiors

tBP/Architecture
4611 Teller Avenue
Newport Beach, CA 92660
ph: 949.673.0300 fx. 949.732.3895

architect

VCA ENGINEERS INC
CIVIL ★ STRUCTURAL
2151 Michelson Dr. #240
Irvine, CA 92612
Tel. 949.679.0870
Fax. 949.679.9370
Project No.: E358
Exp. 9/30/20

consultant

COMPTON COLLEGE
INSTRUCTIONAL BUILDING No.2
COMPTON COMMUNITY COLLEGE DISTRICT
1111 E. ARTESIA BLVD. COMPTON, CA.

owner

tBP project number: 20998.00
file name:
drawn by: checked by:
date: 04 / 08 / 2019

rev:	date:	description:

THIS DRAWING AND THE DESIGNS, DEPICTIONS, IDEAS AND OTHER INFORMATION CONTAINED HEREIN CONSTITUTE UNPUBLISHED WORK tBP/ARCHITECTURE AND SHALL REMAIN PROPERTY OF tBP/ARCHITECTURE IN PERPETUITY. NO PART THEREOF SHALL BE REPRODUCED, DISCLOSED, DISTRIBUTED, SOLD, PUBLISHED OR OTHERWISE USED IN ANY WAY WITHOUT THE ADVANCED EXPRESS WRITTEN CONSENT OF tBP/ARCHITECTURE.

drawing title: ROOF FRAMING PLAN

drawing no.: S3-2

drawing of

4/8/2019 7:03:52 PM

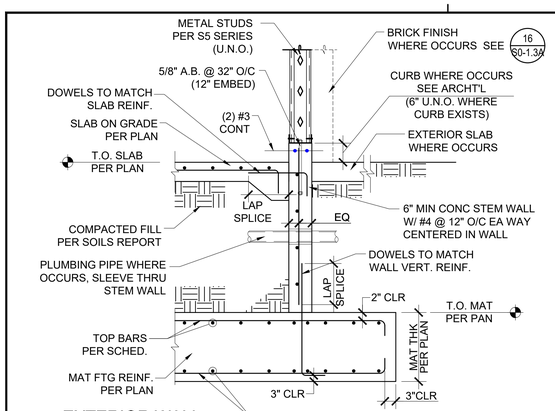

1 EXTERIOR WALL
NTS

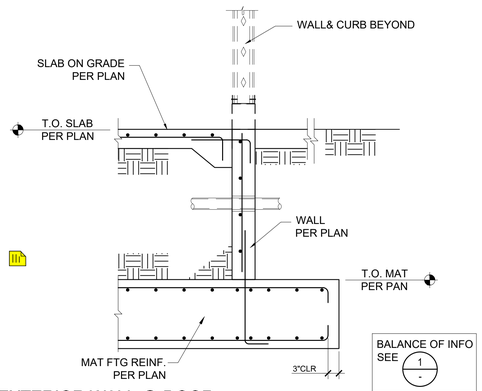

2 EXTERIOR WALL @ DOOR
NTS

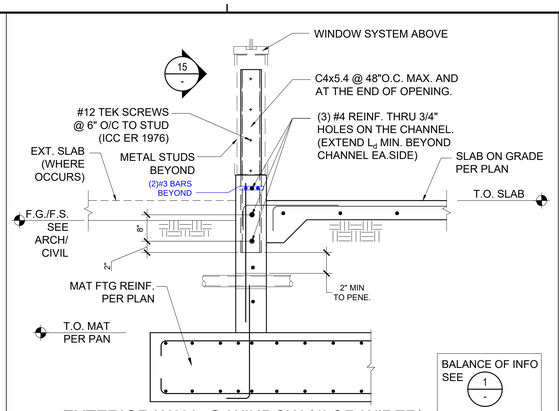

3 EXTERIOR WALL @ WINDOW (4' OR WIDER)
NTS

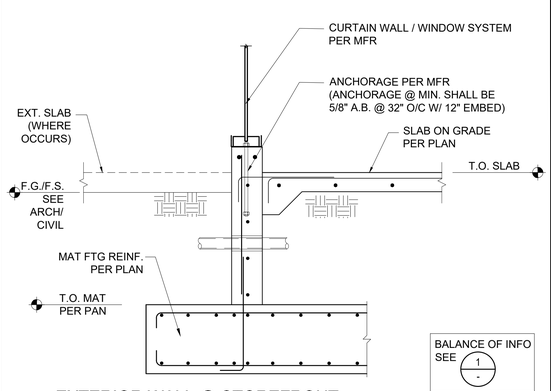

4 EXTERIOR WALL @ STOREFRONT
NTS

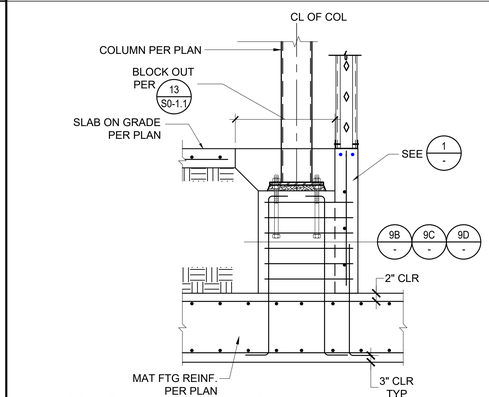

5 COL @ EXTERIOR PILASTER
NTS

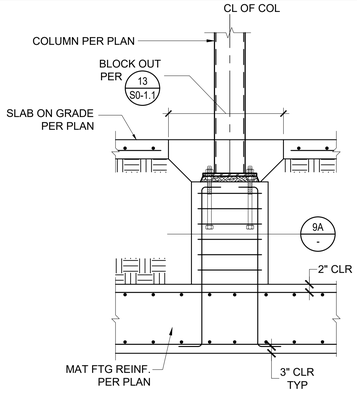

6 HSS COL @ INTERIOR PILASTER
NTS

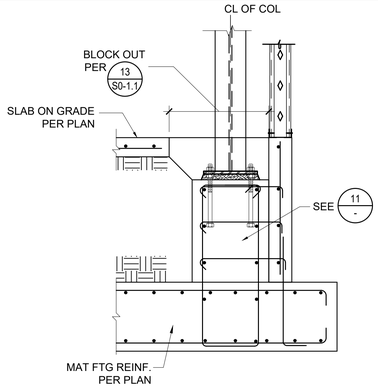

7 COL @ EXT. WALL @ GRADE BEAM
NTS

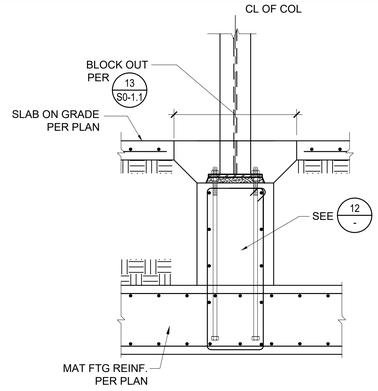

8 COL @ INTERIOR @ GRADE BM
NTS

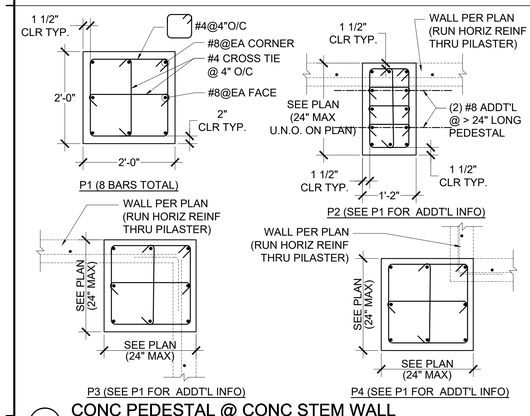

9 CONC PEDESTAL @ CONC STEM WALL
NTS

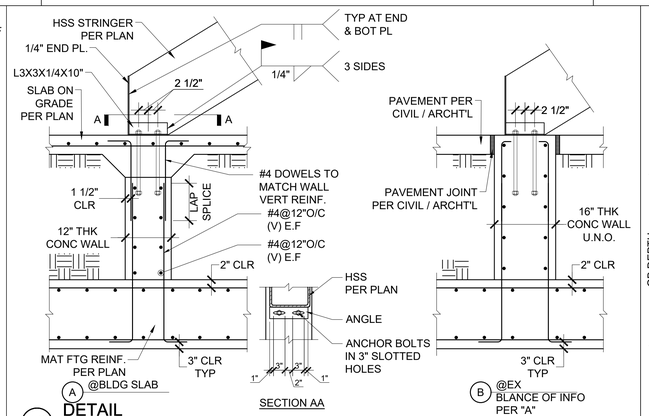

10 DETAIL
NTS

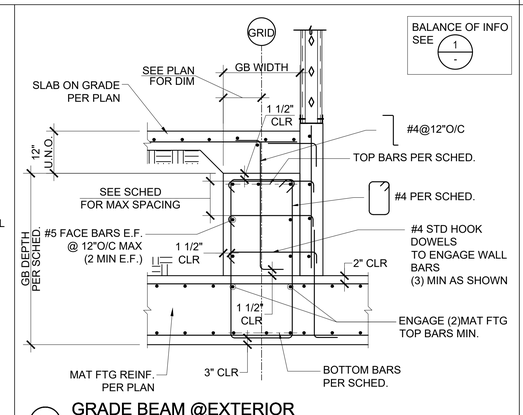

11 GRADE BEAM @EXTERIOR
NTS

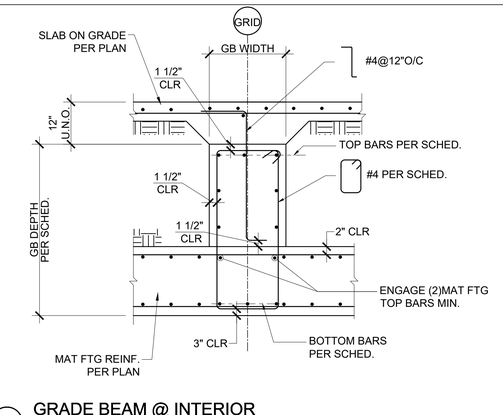

12 GRADE BEAM @ INTERIOR
NTS

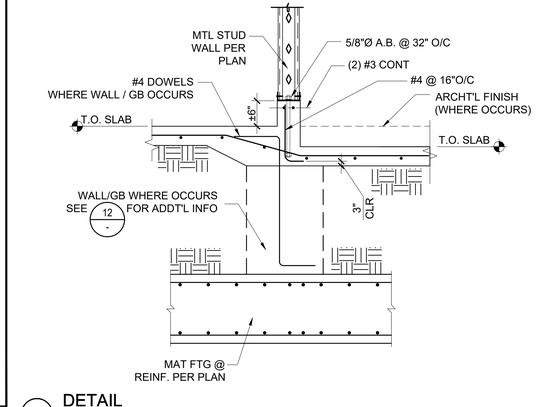

13 DETAIL
NTS

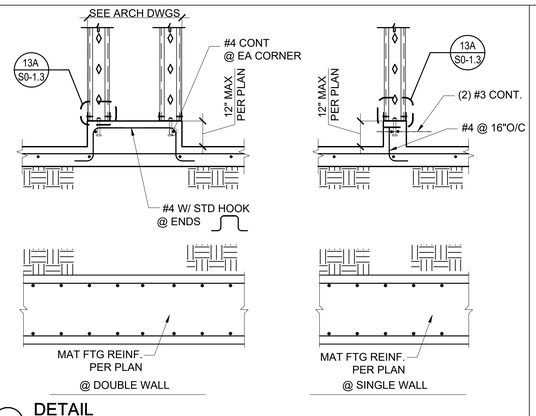

14 DETAIL
NTS

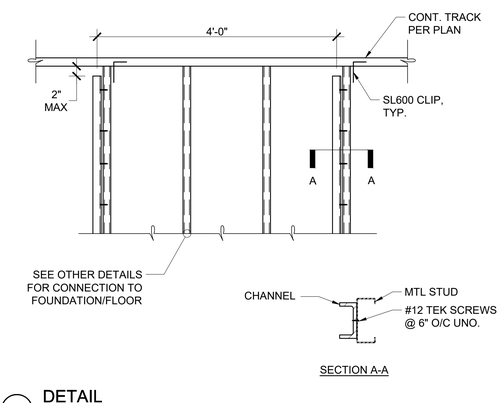

15 DETAIL
NTS

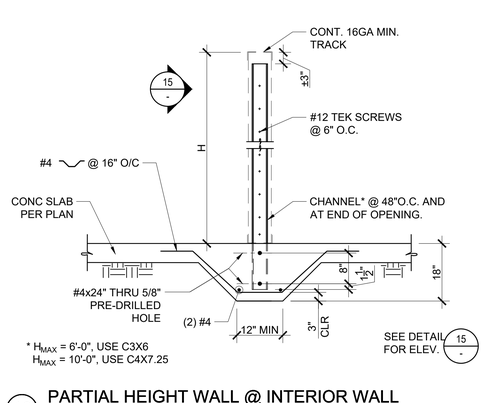

16 PARTIAL HEIGHT WALL @ INTERIOR WALL
NTS

IDENTIFICATION STAMP
DIV. OF THE STATE ARCHITECT
APP. 03-119458 INC:
REVIEWED FOR
SS ☑ FLS ☑ ACS ☑
DATE:05/23/2019

DIVISION OF STATE ARCHITECT
355 South Grand Avenue, Suite 2100
Los Angeles, California. 90012
ph: (213) 897-3995 Fax: (213) 897-3159
agency

tBP architecture planning interiors
tBP/Architecture
4611 Teller Avenue
Newport Beach, CA 92660
ph: 949.673.0300 fx: 949.732.3895
architect

VCA ENGINEERS INC
2151 Michelson Dr. #240
Irvine, CA 92612
Tel. 949.679.0870
Fax. 949.679.9370
Project No.: E358
No. S4029 Exp. 9/30/20
consultant

COMPTON COLLEGE
INSTRUCTIONAL BUILDING No. 2

COMPTON COMMUNITY COLLEGE DISTRICT
1111 E. ARTESIA BLVD. COMPTON, CA.

owner

tBP project number : 20998.00
file name:
drawn by: checked by:
date: 04/08/19

Rev:	date:	description:

THIS DRAWING AND THE DESIGNS, DEPICTIONS, IDEAS AND OTHER INFORMATION CONTAINED HEREIN CONSTITUTE UNPUBLISHED WORK OF tBP/ARCHITECTURE AND SHALL REMAIN THE PROPERTY OF tBP/ARCHITECTURE IN PERPETUITY. NO PART THEREOF SHALL BE REPRODUCED, DISCLOSED, DISTRIBUTED, SOLD, PUBLISHED OR OTHERWISE USED IN ANY WAY WITHOUT THE ADVANCED EXPRESS WRITTEN CONSENT OF tBP/ARCHITECTURE.

drawing title:
FOUNDATION DETAILS

drawing no.:
S4-0.1
drawing of

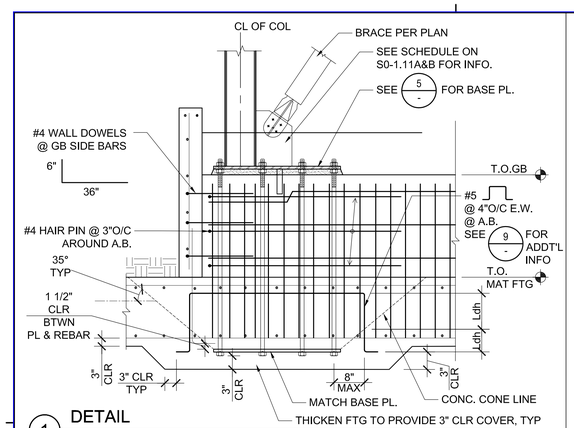

1 DETAIL
NTS

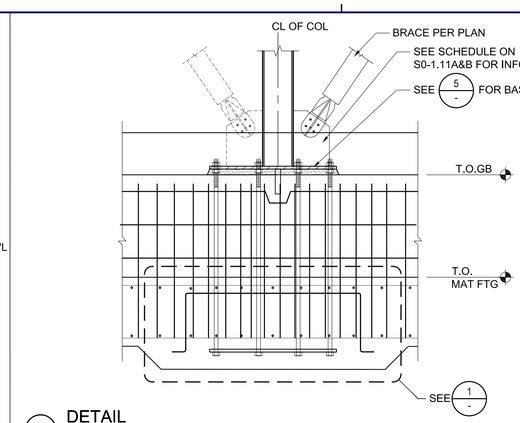

2 DETAIL
NTS

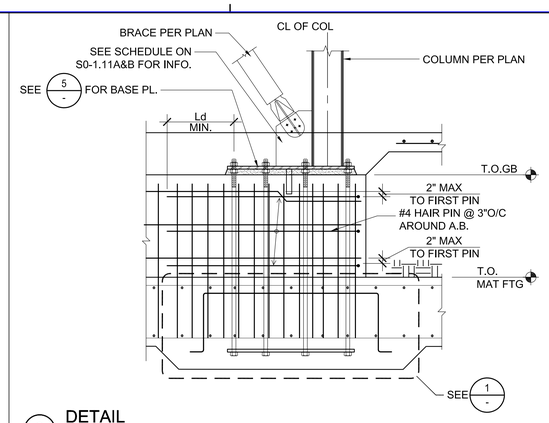

3 DETAIL
NTS

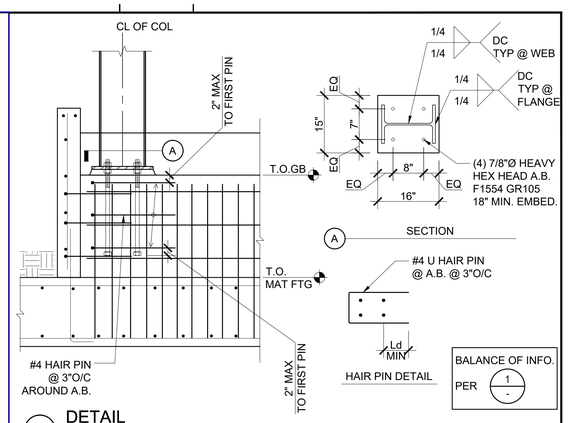

4 DETAIL
NTS

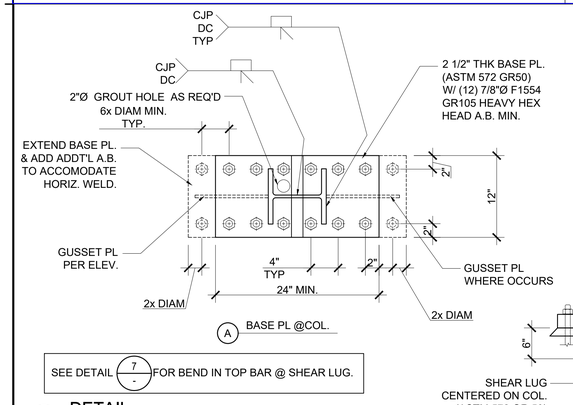

5 DETAIL
NTS

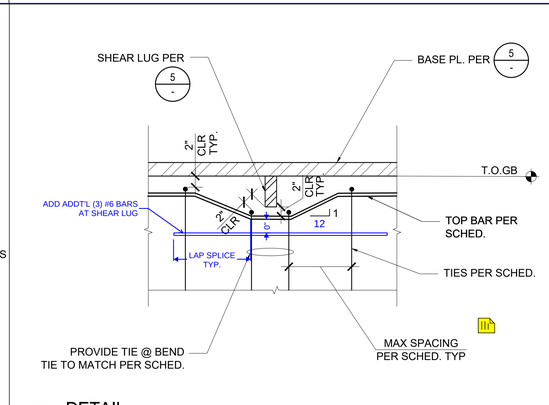

7 DETAIL
NTS

8 DETAIL
NTS

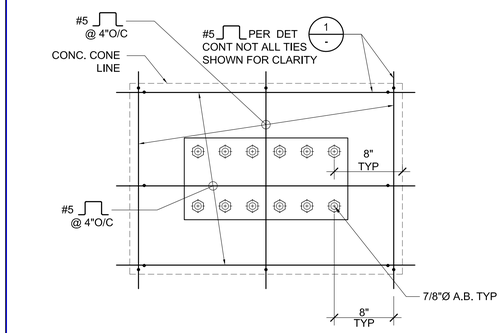

9 DETAIL
NTS

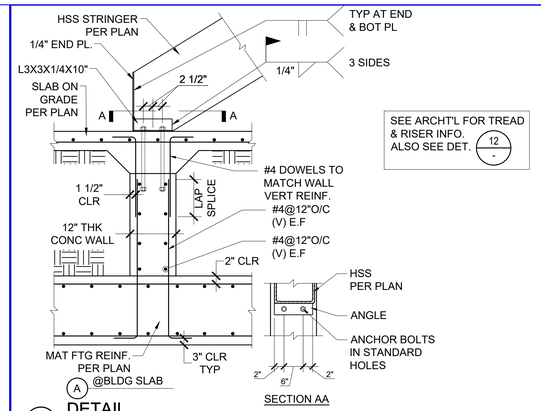

10 DETAIL
NTS

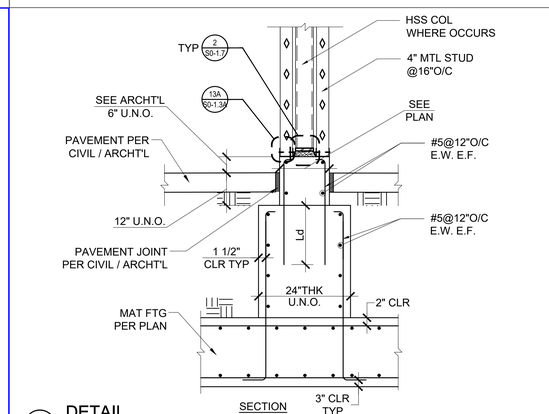

11 DETAIL
NTS

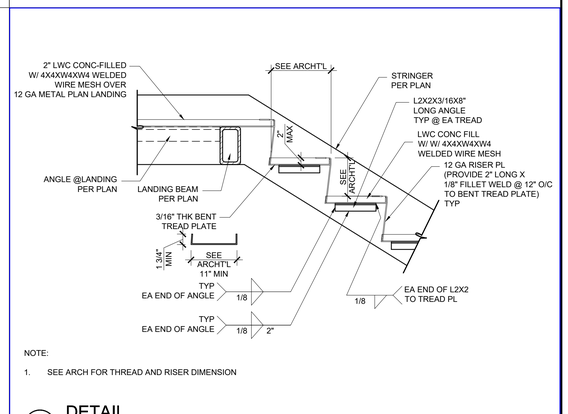

12 DETAIL
NTS

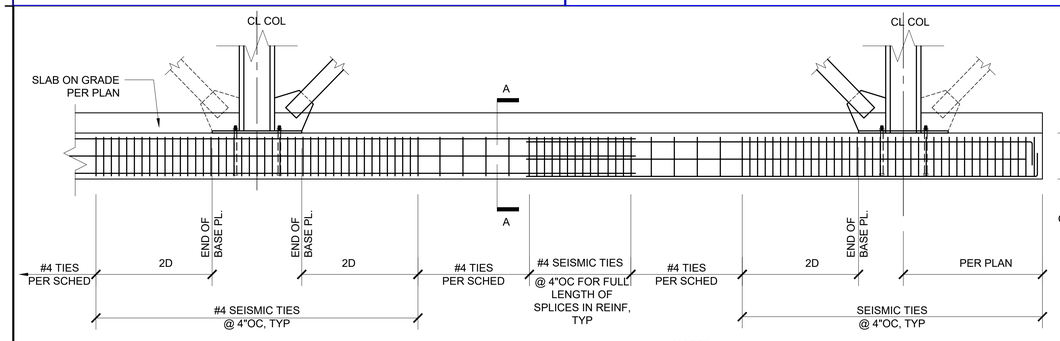

NOTES:
1. #4 SEISMIC TIES PER SCHEDULE. SEE ELEV. ABOVE WHERE 4" SPACING IS REQD.
2. ALL REINFORCEMENT SHALL BE ASTM A706.
3. TYP SEISMIC TIE: ALTERNATE CAP TIE
4. TYPE 2 MECHANICAL COUPLERS MAY BE USED IN LIEU OF LAP SPLICES @ GRADE BEAM REINF. (ICC ESR 1764)

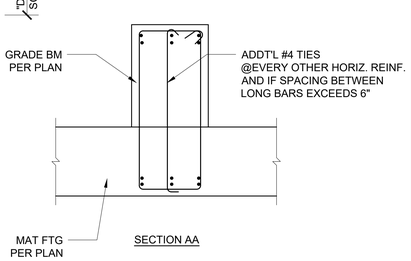

13 GRADE BEAM ELEVATION BRBF (SIM@ SMRF)
NTS

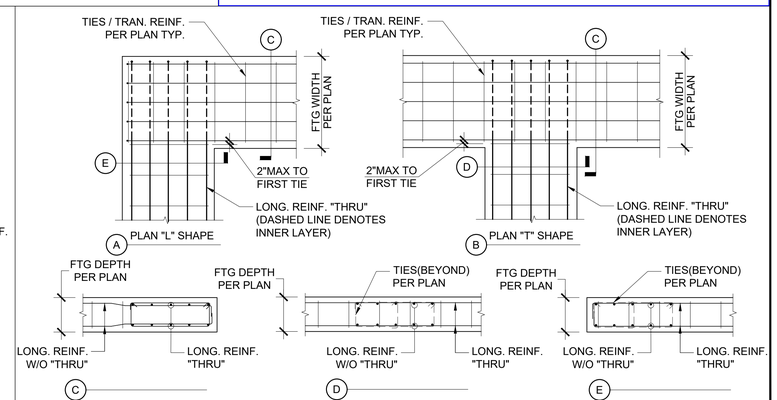

15 DETAIL
NTS

IDENTIFICATION STAMP
DIV. OF THE STATE ARCHITECT
APP. 03-119458 INC:
REVIEWED FOR
SS ☑ FLS ☑ ACS ☑
DATE:05/23/2019

DIVISION OF STATE ARCHITECT
355 South Grand Avenue, Suite 2100
Los Angeles, California. 90012
ph: (213) 897-3995 Fax: (213) 897-3159
agency

tBP
architecture
planning
interiors
tBP/Architecture
4611 Teller Avenue
Newport Beach, CA 92660
ph: 949.673.0300 fx: 949.732.3895
architect

VCA ENGINEERS INC
2151 Michelson Dr. #240
Irvine, CA 92612
Tel. 949.679.0870
Fax. 949.679.9370
Project No.: E358
consultant

COMPTON COLLEGE
INSTRUCTIONAL BUILDING No. 2

COMPTON COMMUNITY COLLEGE DISTRICT
1111 E. ARTESIA BLVD. COMPTON, CA.

owner

tBP project number : 20998.00
file name:
drawn by: checked by:
date: 04/08/19

Rev:	date:	description:

THIS DRAWING AND THE DESIGNS, DEPICTIONS, IDEAS AND OTHER INFORMATION CONTAINED HEREIN CONSTITUTE UNPUBLISHED WORK OF tBP/ARCHITECTURE AND SHALL REMAIN THE PROPERTY OF tBP/ARCHITECTURE IN PERPETUITY. NO PART THEREOF SHALL BE REPRODUCED, DISCLOSED, DISTRIBUTED, SOLD, PUBLISHED OR OTHERWISE USED IN ANY WAY WITHOUT THE ADVANCED EXPRESS WRITTEN CONSENT OF tBP/ARCHITECTURE.

drawing title:
FOUNDATION DETAILS

drawing no.:
S4-0.2
drawing of

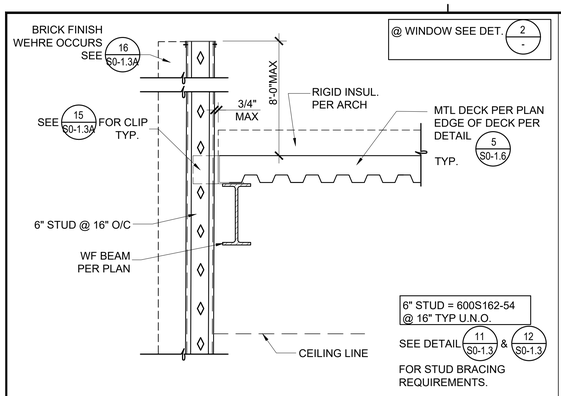

1 STUD WALL @ ROOF (SLOTTED CONNECTION)
NTS

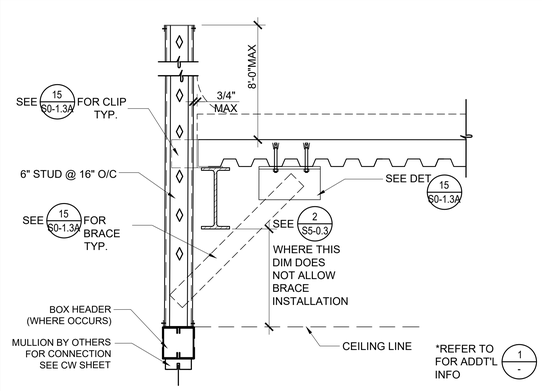

2 STUD WALL @ ROOF OVER WINDOW
NTS

3 DETAIL
NTS

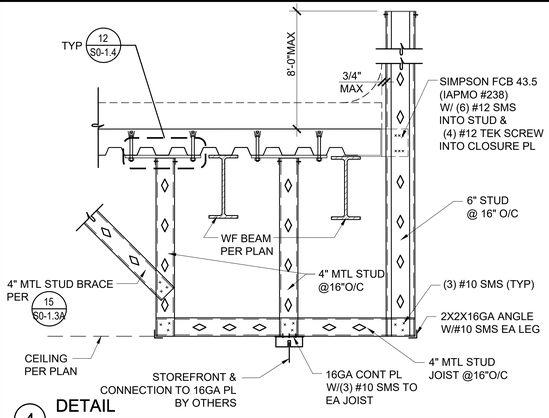

4 DETAIL
NTS

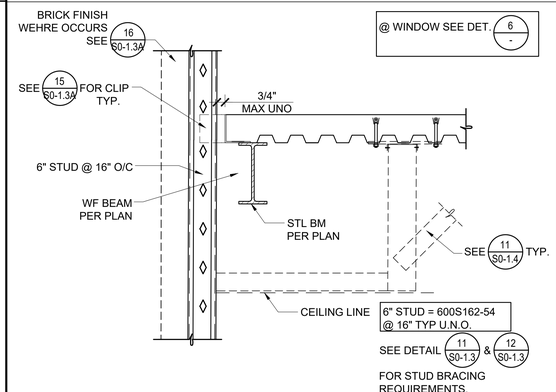

5 STUD WALL @ FLOOR (SLOTTED CONNECTION)
NTS

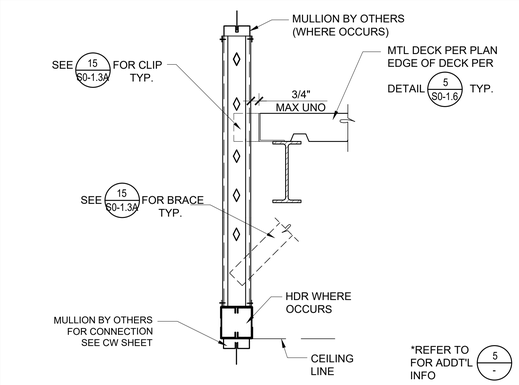

6 DETAIL
NTS

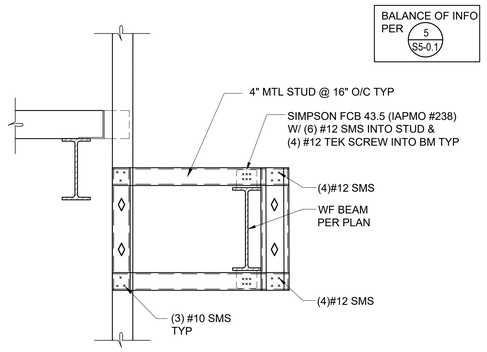

7 DETAIL
NTS

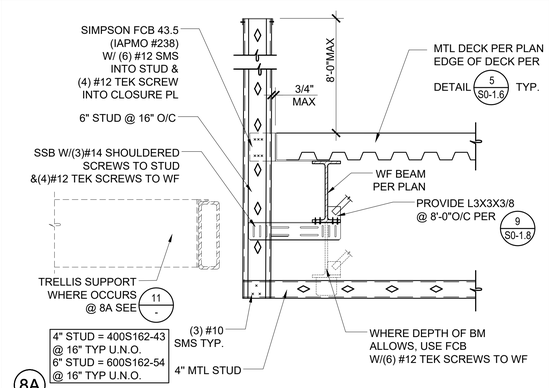

8A
8 DETAIL
NTS

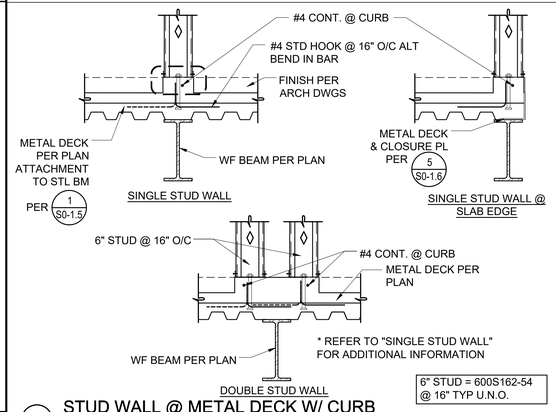

9 STUD WALL @ METAL DECK W/ CURB
NTS

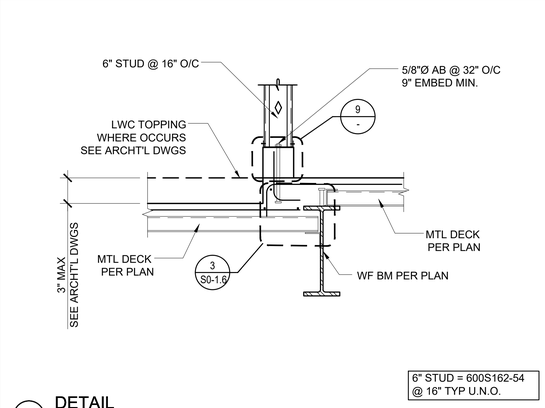

10 DETAIL
NTS

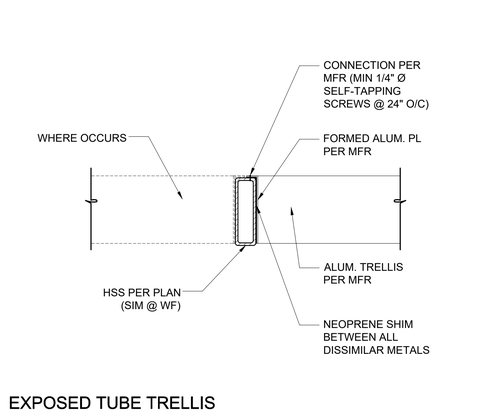

11 EXPOSED TUBE TRELLIS
NTS

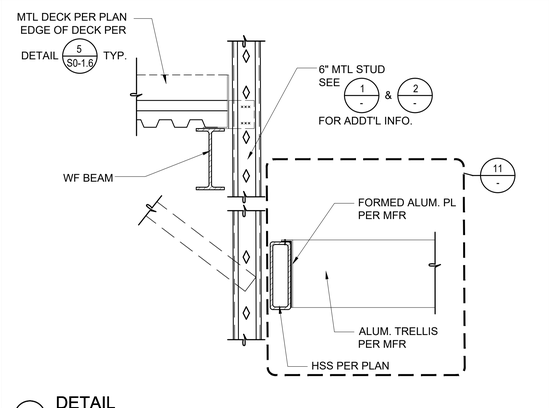

12 DETAIL
NTS

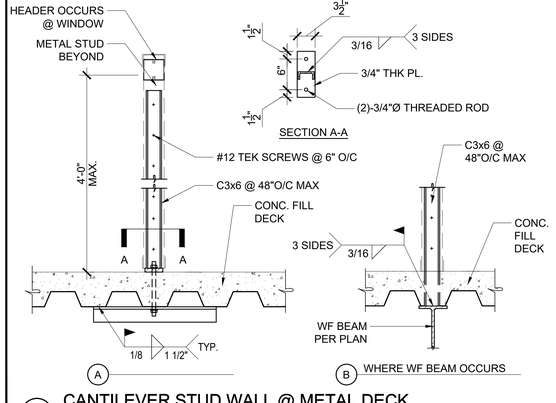

13 CANTILEVER STUD WALL @ METAL DECK
NTS

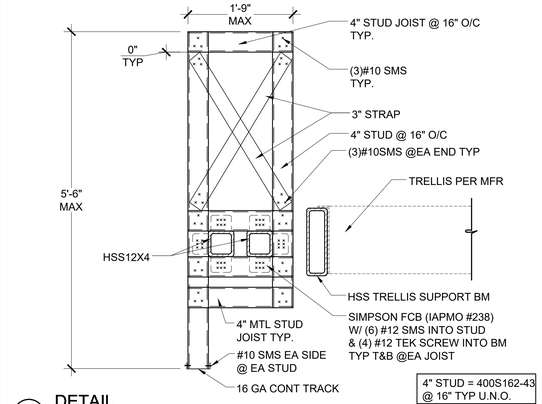

14 DETAIL
NTS

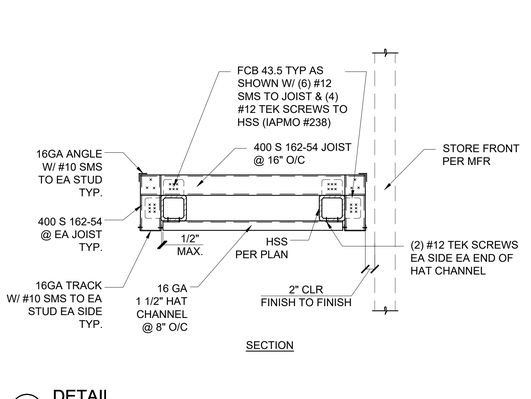

15 DETAIL
NTS

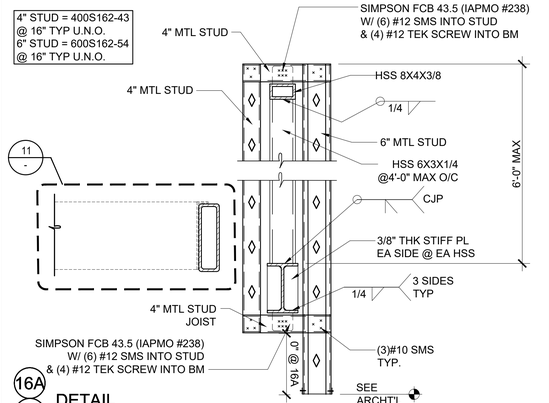

16A
16 DETAIL
NTS

IDENTIFICATION STAMP
DIV. OF THE STATE ARCHITECT
APP. 03-119458 INC:
REVIEWED FOR
SS ☑ FLS ☑ ACS ☑
DATE:05/23/2019

DIVISION OF STATE ARCHITECT
355 South Grand Avenue, Suite 2100
Los Angeles, California. 90012
ph: (213) 897-3995 Fax: (213) 897-3159
agency

tBP architecture planning interiors
tBP/Architecture
4611 Teller Avenue
Newport Beach, CA 92660
ph: 949.673.0300 fx: 949.732.3895
architect

VCA ENGINEERS INC
2151 Michelson Dr. #240
Irvine, CA 92612
Tel. 949.679.0870
Fax. 949.679.9370
Project No.: E358
consultant

COMPTON COLLEGE
INSTRUCTIONAL BUILDING No. 2

COMPTON COMMUNITY COLLEGE DISTRICT
1111 E. ARTESIA BLVD. COMPTON, CA.

owner

tBP project number : 20998.00
file name:
drawn by: checked by:
date: 04/08/19

Rev:	date:	description:

THIS DRAWING AND THE DESIGNS, REPICTIVNS, IDEAS AND OTHER INFORMATION CONTAINED HEREIN CONSTITUTE UNPUBLISHED WORK OF tBP/ARCHITECTURE AND SHALL REMAIN THE PROPERTY OF tBP/ARCHITECTURE IN PERPETUITY. NO PART THEREOF SHALL BE REPRODUCED, DISCLOSED, DISTRIBUTED, SOLD, PUBLISHED OR OTHERWISE USED IN ANY WAY WITHOUT THE ADVANCED EXPRESS WRITTEN CONSENT OF tBP/ARCHITECTURE.

drawing title:
FRAMING DETAILS

drawing no.:
S5-0.1
drawing of

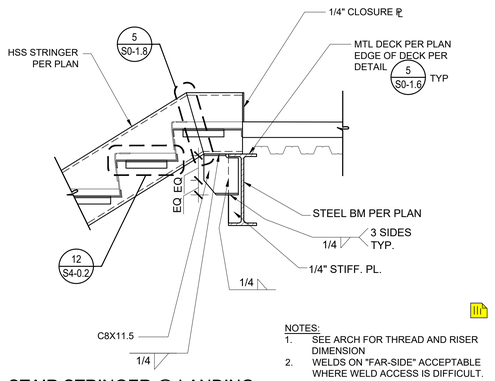

1 STAIR STRINGER @ LANDING
NTS

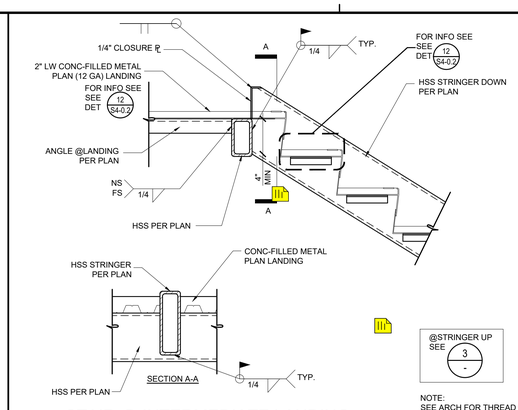

2 STAIR @ INTERMEDIATE LANDING
NTS

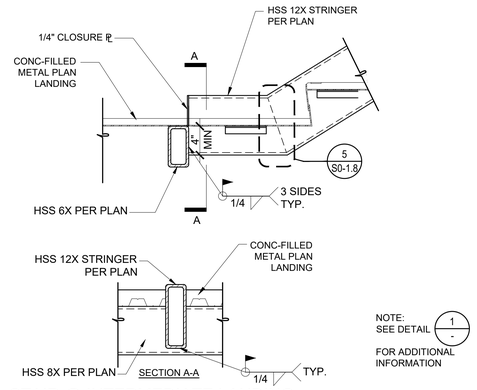

3 STAIR @ INTERMEDIATE LANDING
NTS

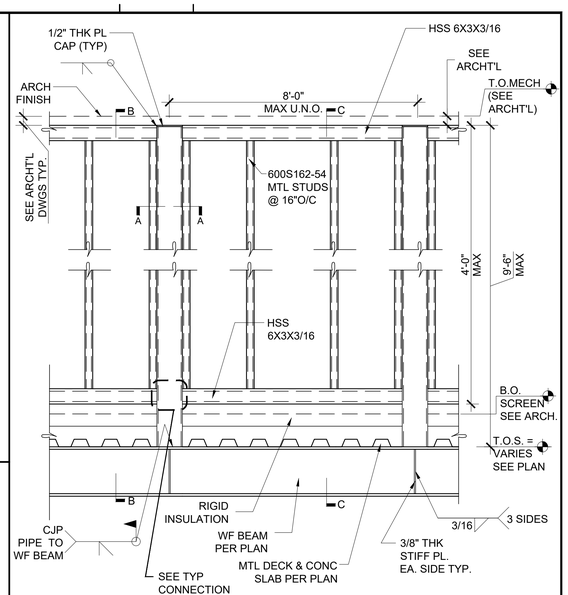

8 CANTILEVER WALL @ROOF
NTS

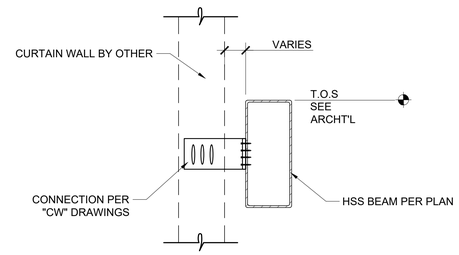

5 CURTAIN WALL TO HSS BEAM
NTS

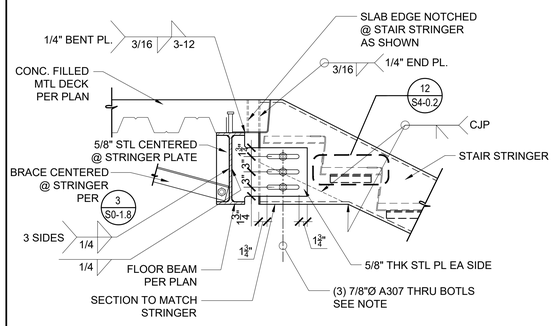

6 STAIR STRINGER @ FLOOR LANDING (SLOTTED)
NTS

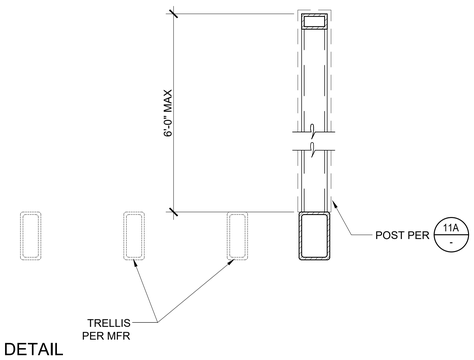

7 DETAIL
NTS

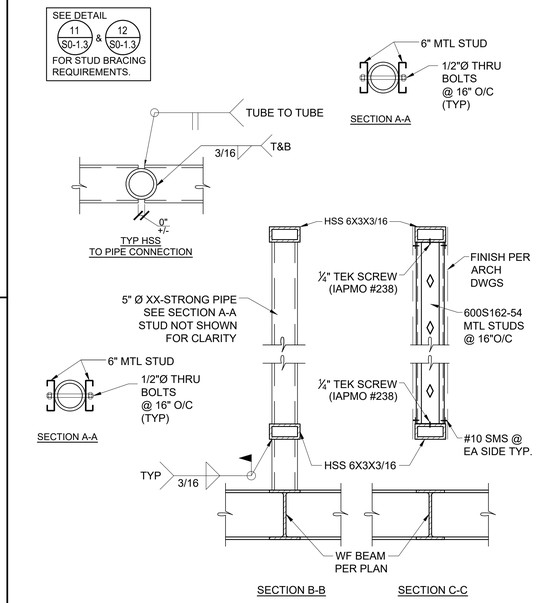

8 CANTILEVER WALL @ROOF
NTS

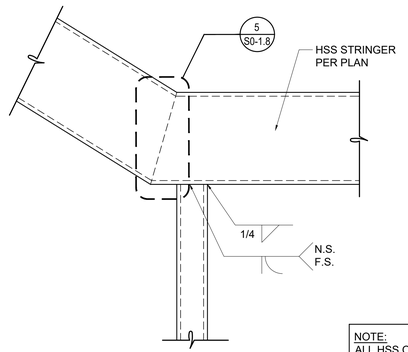

9 DETAIL
NTS

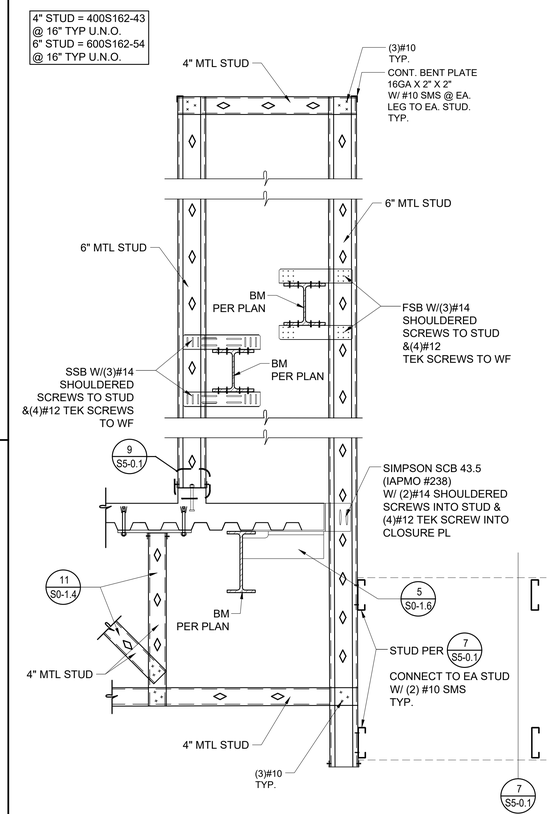

14 DETAIL
NTS

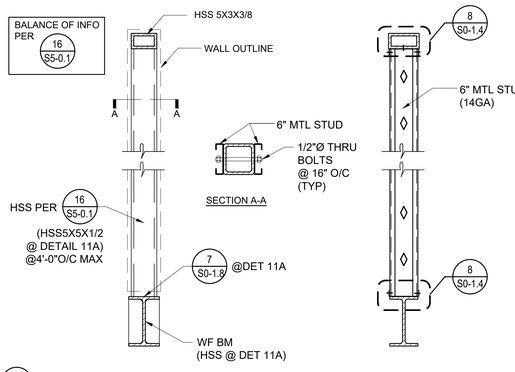

11A
11 DETAIL
NTS

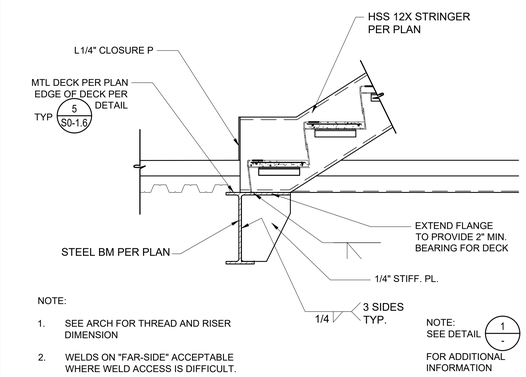

13 HSS STRINGER TO FLOOR
NTS

15 DETAIL
NTS

16 DETAIL
NTS

IDENTIFICATION STAMP
DIV. OF THE STATE ARCHITECT
APP. 03-119458 INC:
REVIEWED FOR
SS ☑ FLS ☑ ACS ☑
DATE:05/23/2019

DIVISION OF STATE ARCHITECT
355 South Grand Avenue, Suite 2100
Los Angeles, California. 90012
ph: (213) 897-3995 Fax: (213) 897-3159
agency

tBP architecture planning interiors
tBP/Architecture
4611 Teller Avenue
Newport Beach, CA 92660
ph: 949.673.0300 fx: 949.732.3895
architect

VCA ENGINEERS INC
2151 Michelson Dr. #240
Irvine, CA 92612
Tel. 949.679.0870
Fax. 949.679.9370
Project No.: E358
No. S4029 Exp. 9/30/20
consultant

COMPTON COLLEGE
INSTRUCTIONAL BUILDING No. 2
COMPTON COMMUNITY COLLEGE DISTRICT
1111 E. ARTESIA BLVD. COMPTON, CA.
owner

tBP project number : 20998.00
file name:
drawn by: checked by:
date: 04/08/19

Rev:	date:	description:

THIS DRAWING AND THE DESIGNS, DEPICTIONS, IDEAS AND OTHER INFORMATION CONTAINED HEREIN CONSTITUTE UNPUBLISHED WORK OF tBP/ARCHITECTURE AND SHALL REMAIN THE PROPERTY OF tBP/ARCHITECTURE IN PERPETUITY. NO PART THEREOF SHALL BE REPRODUCED, DISCLOSED, DISTRIBUTED, SOLD, PUBLISHED OR OTHERWISE USED IN ANY WAY WITHOUT THE ADVANCED EXPRESS WRITTEN CONSENT OF tBP/ARCHITECTURE.

drawing title:
FRAMING DETAILS

drawing no.:
S5-0.2
drawing of

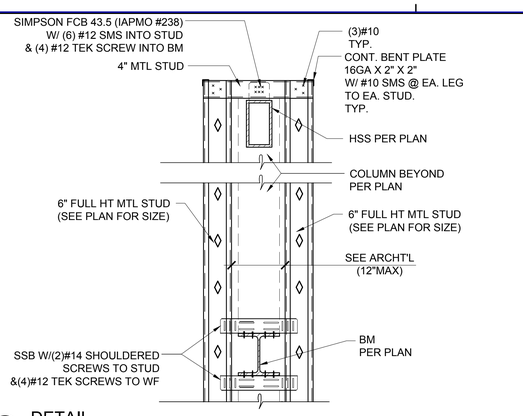

1 DETAIL
NTS

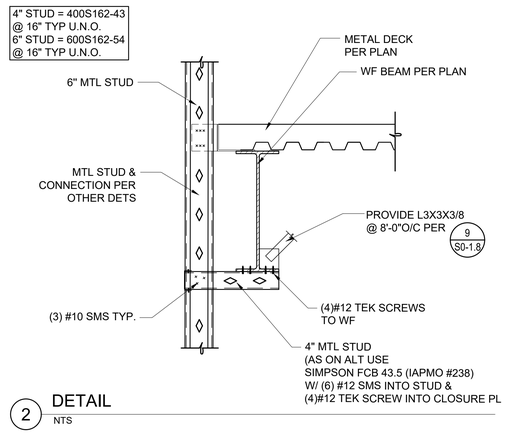

2 DETAIL
NTS

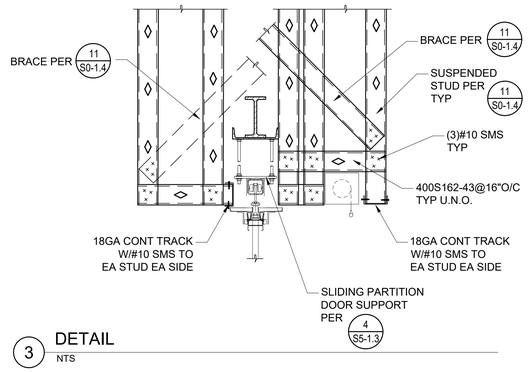

3 DETAIL
NTS

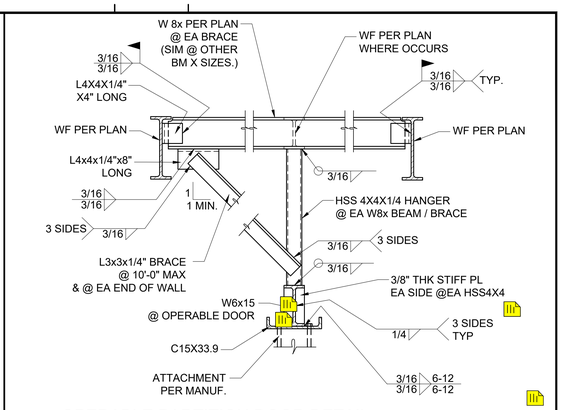

4 OPERABLE PARTITION DOOR DETAIL
NTS

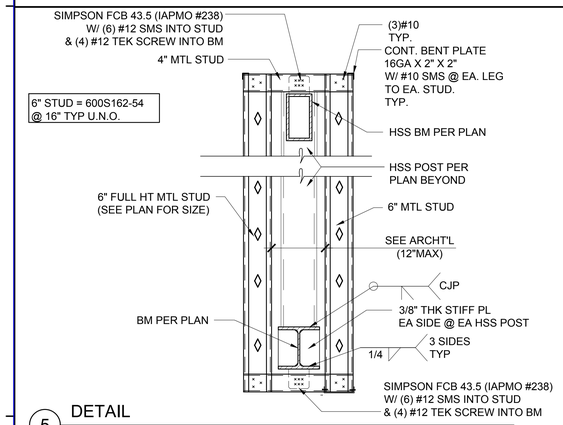

5 DETAIL
NTS

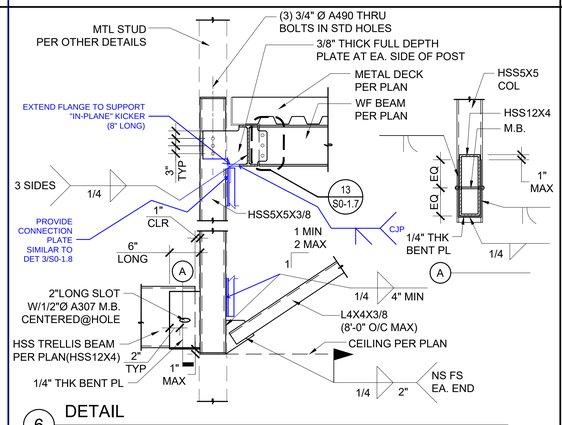

6 DETAIL
NTS

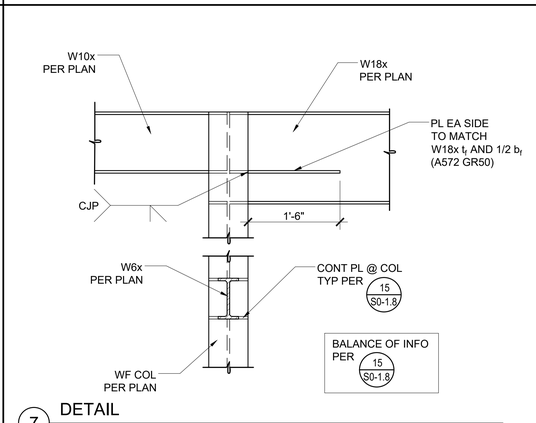

7 DETAIL
NTS

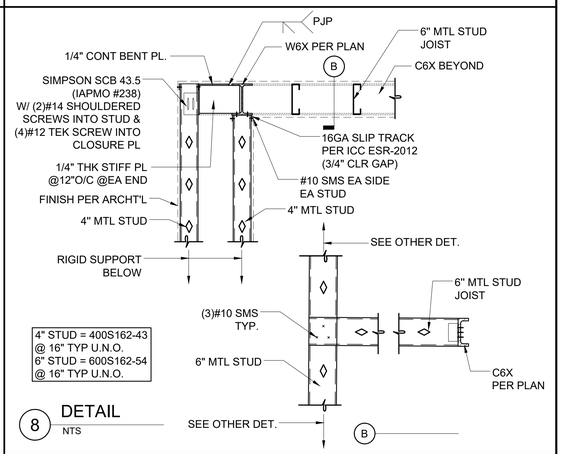

8 DETAIL
NTS

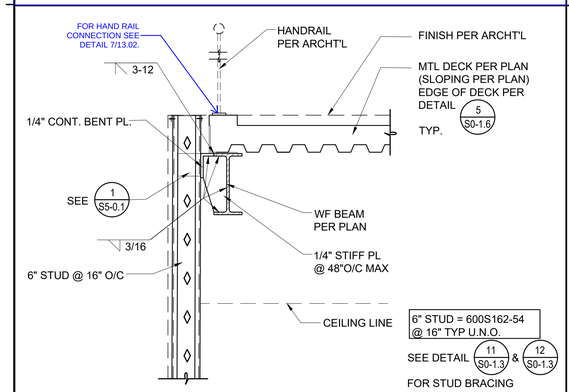

9 DETAIL
NTS

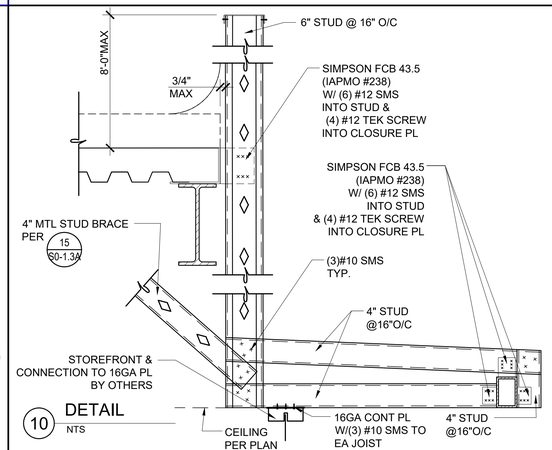

10 DETAIL
NTS

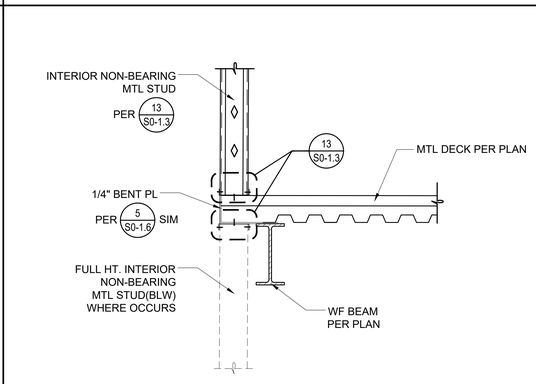

11 DETAIL
NTS

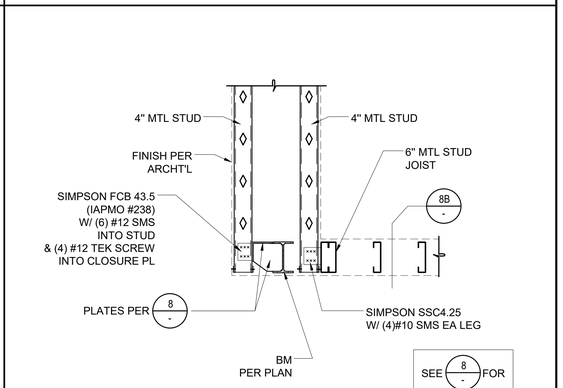

12 DETAIL
NTS

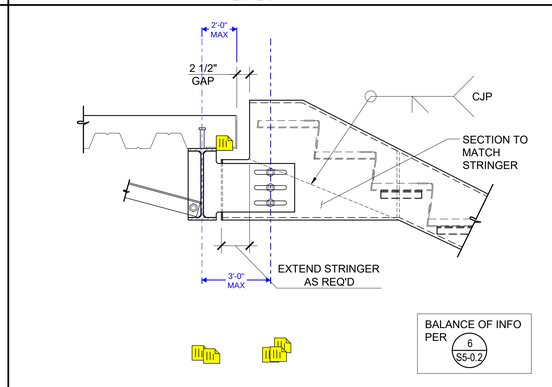

14 DETAIL
NTS

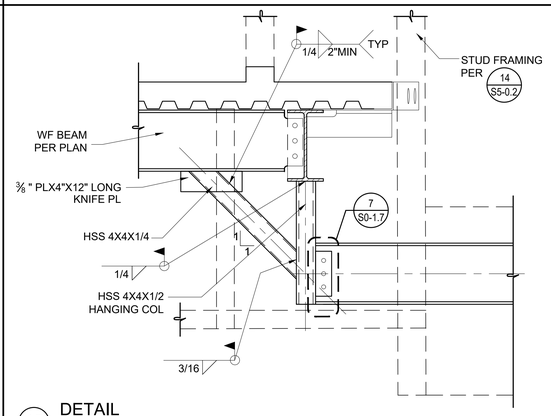

15 DETAIL
NTS

16 DETAIL
NTS

IDENTIFICATION STAMP
DIV. OF THE STATE ARCHITECT
APP. 03-119458 INC:
REVIEWED FOR
SS ☑ FLS ☑ ACS ☑
DATE:05/23/2019

DIVISION OF STATE ARCHITECT
355 South Grand Avenue, Suite 2100
Los Angeles, California. 90012
ph: (213) 897-3995 Fax: (213) 897-3159
agency

tBP architecture planning interiors
tBP/Architecture
4611 Teller Avenue
Newport Beach, CA 92660
ph: 949.673.0300 fx: 949.732.3895
architect

VCA ENGINEERS INC
2151 Michelson Dr. #240
Irvine, CA 92612
Tel. 949.679.0870
Fax. 949.679.9370
Project No.: E358
consultant

COMPTON COLLEGE
INSTRUCTIONAL BUILDING No. 2
COMPTON COMMUNITY COLLEGE DISTRICT
1111 E. ARTESIA BLVD. COMPTON, CA.
owner

tBP project number : 20998.00
file name:
drawn by: checked by:
date: 04/08/19

Rev:	date:	description:

THIS DRAWING AND THE DESIGNS, DEPICTIONS, IDEAS AND OTHER INFORMATION CONTAINED HEREIN CONSTITUTE UNPUBLISHED WORK OF tBP/ARCHITECTURE AND SHALL REMAIN THE PROPERTY OF tBP/ARCHITECTURE IN PERPETUITY. NO PART THEREOF SHALL BE REPRODUCED, DISCLOSED, DISTRIBUTED, SOLD, PUBLISHED OR OTHERWISE USED IN ANY WAY WITHOUT THE ADVANCED EXPRESS WRITTEN CONSENT OF tBP/ARCHITECTURE.

drawing title:
FRAMING DETAILS

drawing no.:
S5-0.3
drawing of

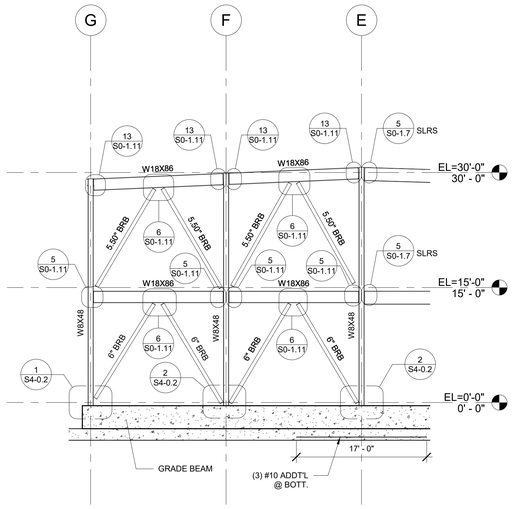

1 BRACE FRAME ELEVATION (GL-1)
SCALE: 1/8" = 1'-0"

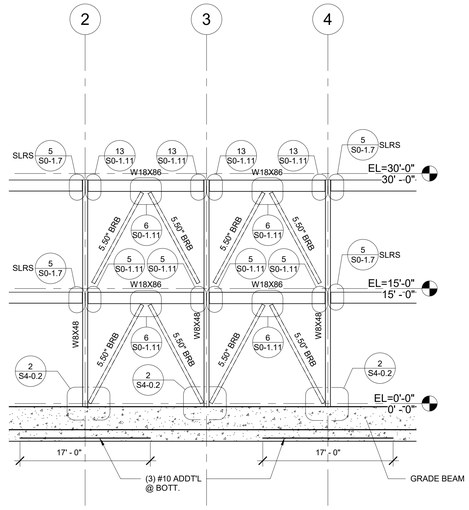

2 BRACE FRAME ELEVATION (GL-G)
SCALE: 1/8" = 1'-0"

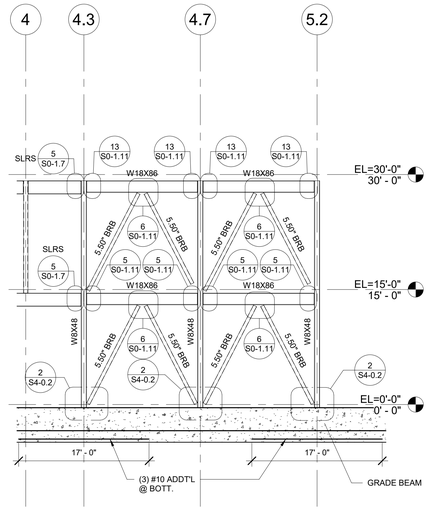

3 BRACE FRAME ELEVATION (GL-B)
SCALE: 1/8" = 1'-0"

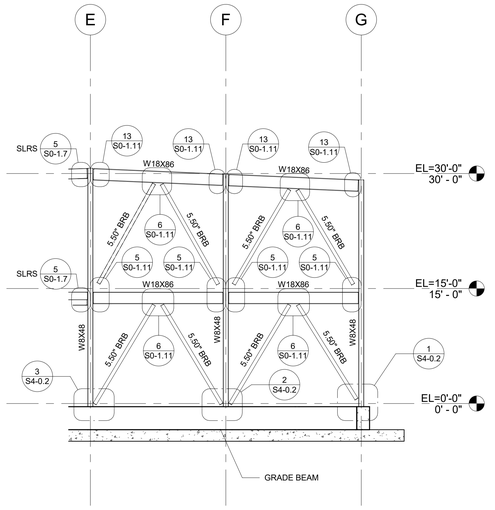

4 BRACE FRAME ELEVATION (GL-6)
SCALE: 1/8" = 1'-0"

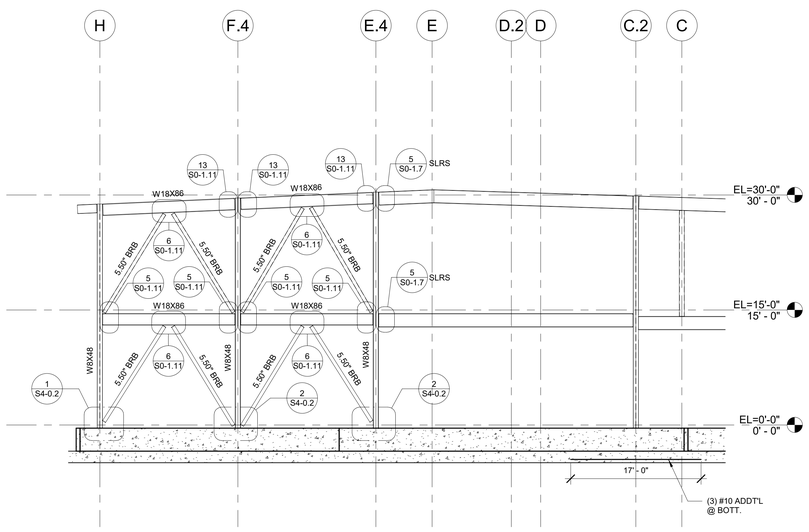

5 BRACE FRAME ELEVATION (GL-8)
SCALE: 1/8" = 1'-0"

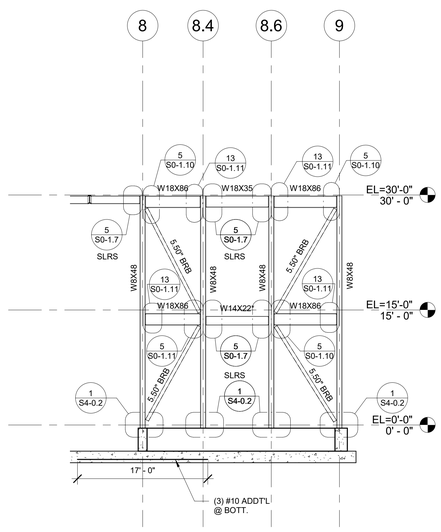

6 BRACE FRAME ELEVATION (GL-C.2)
SCALE: 1/8" = 1'-0"

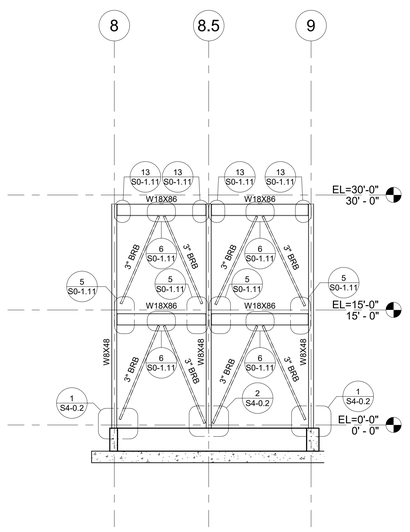

7 BRACE FRAME ELEVATION (GL-H)
SCALE: 1/8" = 1'-0"

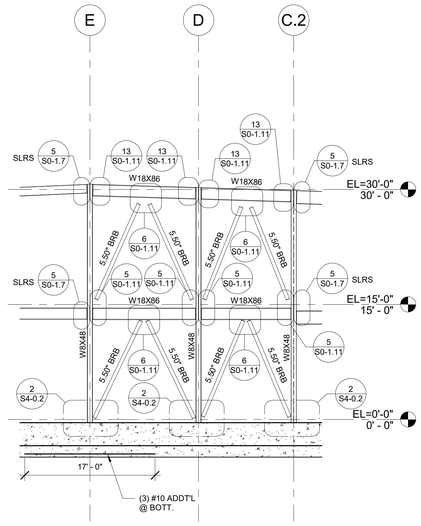

8 BRACE FRAME ELEVATION (GL-9)
SCALE: 1/8" = 1'-0"

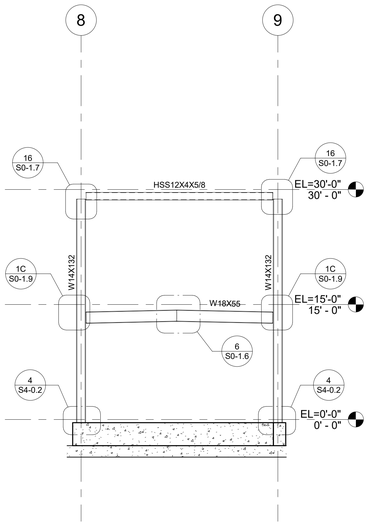

9 MOMENT FRAME ELEVATION (GL-A)
SCALE: 1/8" = 1'-0"

SHEET NOTES:

1. ALL BRACES ARE BUCKLING RESTRAINED BRACE (BRB)
2. ALL CONNECTIONS ARE DESIGNED FOR BOLTED CONNECTION.
3. ALL BRB IS PRODUCT OF "CORE BRACE, LLC"
4. FOR BRB INFO. SEE SHEET S0-1.11A & S0-1.11B
5. FOR GUSSET PLATE INFO. SEE SHEET S0-1.11A & S0-1.11B

IDENTIFICATION STAMP
DIV. OF THE STATE ARCHITECT
APP. 03-119458 INC:
REVIEWED FOR
SS ☑ FLS ☑ ACS ☑
DATE:05/23/2019

DIVISION OF THE STATE ARCHITECT
355 South Grand Avenue, Suite 2100
Los Angeles, CA 90012
ph: (213) 897-3995 fx:(213) 897-3159

agency

tBP
architecture
planning
interiors

tBP/Architecture
4611 Teller Avenue
Newport Beach, CA 92660
ph: 949.673.0300 fx: 949.732.3895

architect

VCA ENGINEERS INC
CIVIL ★ STRUCTURAL
2151 Michelson Dr. #240
Irvine, CA 92612
Tel. 949.679.0870
Fax. 949.679.9370
Project No.: E358

consultant

COMPTON COLLEGE
INSTRUCTIONAL BUILDING No.2
COMPTON COMMUNITY COLLEGE DISTRICT
1111 E. ARTESIA BLVD. COMPTON, CA.

owner

tBP project number: 20998.00
file name:
drawn by: checked by:
date: 04 / 08 / 2019

rev:	date:	description:

THIS DRAWING AND THE WORKING DEPICTIONS, IDEAS AND OTHER INFORMATION CONTAINED HEREIN CONSTITUTE UNPUBLISHED WORK OF tBP/ARCHITECTURE AND SHALL REMAIN PROPERTY OF tBP/ARCHITECTURE IN PERPETUITY. NO PART THEREOF SHALL BE REPRODUCED, DISCLOSED, DISTRIBUTED, SOLD, PUBLISHED OR OTHERWISE USED IN ANY WAY WITHOUT THE ADVANCED EXPRESS WRITTEN CONSENT OF tBP/ARCHITECTURE.

drawing title:
FRAME ELEVATIONS

drawing no.:
S6-1
drawing of

4/8/2019 7:03:58 PM

GENERAL NOTES

1. ALL PRODUCTS AND EXECUTION OF WORK SHALL BE IN ACCORDANCE WITH THE SPECIFICATIONS AND AS SHOWN ON PLANS.

2. IN THE EVENT OF A DISCREPANCY BETWEEN CONTRACT DRAWINGS AND SPECIFICATIONS, THE MOST STRINGENT SHALL GOVERN.

3. ALL WORK TO BE IN ACCORDANCE WITH REQUIREMENTS OF GOVERNING FIRE, BUILDING, MECHANICAL, PLUMBING, AND ELECTRICAL CODES.

4. PRIOR TO SUBMISSION OF ANY BID, THE CONTRACTOR SHALL PERFORM A THOROUGH FIELD SURVEY OF THE EXISTING SITE CONDITIONS AND FEATURES. ANY SITE CONDITIONS WHICH MAY CAUSE SIGNIFICANT DEVIATION FROM THE DESIGN DRAWINGS SHALL BE BROUGHT TO THE ATTENTION OF ARCHITECT/ENGINEER OF RECORD FOR CLARIFICATION PRIOR TO SUBMISSION OF THE CONTRACTOR'S BID. VERIFY DIMENSIONS OF ALL PRODUCTS INCLUDING OWNER FURNISHED EQUIPMENT TO ENSURE PROPER COORDINATION WITH CONSTRUCTION. CONTRACTOR SHALL BEAR ALL COSTS FOR RELOCATION OF EQUIPMENT, PIPE, DUCTS, ETC. FROM FAILURE TO ADVISE OF CONFLICT IN WRITING PRIOR TO SUBMISSION OF ANY BID, AND/OR FROM FAILURE TO PROPERLY COORDINATE INSTALLATIONS OF SYSTEMS.

5. IF ANY PART OF THIS CONTRACTOR'S WORK DEPENDS UPON THE WORK OF A SEPARATE CONTRACTOR, THIS CONTRACTOR SHALL INSPECT SUCH OTHER WORK AND PROMPTLY REPORT IN WRITING TO THE OWNER ANY DEFECTS IN SUCH OTHER WORK THAT RENDERS IT UNSUITABLE TO PERFORM THE WORK OF THIS CONTRACTOR. FAILURE OF THIS CONTRACTOR TO SO INSPECT AND REPORT SHALL CONSTITUTE AN ACCEPTANCE OF THE OTHER CONTRACTOR'S WORK, EXCEPT AS TO DEFECTS WHICH MAY DEVELOP IN OTHER CONTRACTOR'S WORK AFTER EXECUTION OF THIS CONTRACTOR'S WORK.

6. MECHANICAL CONTRACTOR SHALL BE COGNIZANT WITH BUILDING STRUCTURE AND CEILING SPACE ALLOWED FOR INSTALLATION OF EQUIPMENT PRIOR TO BID, INCLUDE IN THE BID ADDITIONAL OFFSETS OF DUCTS AND PIPING THAT ARE NOT SHOWN ON DRAWING.

7. CONTRACTOR SHALL BE RESPONSIBLE FOR COORDINATING WITH ARCHITECT AND GC AND PROVIDING ALL CEILING ACCESS. PATCHING AND REPAIR REQUIRED IN THE IMMEDIATE AREA OF THE WORK AND ANY ACCESS OUTSIDE THE IMMEDIATE AREA OF THE WORK REQUIRED TO PROVIDE COMPLETE ACCESSIBLE AND PROPERLY FUNCTIONING SYSTEMS.

8. DUCT PENETRATIONS THROUGH FIRE OR SMOKE BARRIERS SHALL BE PROVIDED WITH PROPER CODE REQUIRED PROTECTION. ADVISE OWNER'S REPRESENTATIVE IN WRITING IN EVENT OF DISCREPANCIES BETWEEN CONTRACT DOCUMENTS PRIOR TO BID. CONTRACTOR SHALL BEAR ALL COSTS FOR ADDITIONAL DAMPERS FROM FAILURE TO ADVISE DISCREPANCIES PRIOR TO BID.

9. ALL DUCT DIMENSIONS ARE SHOWN IN INCHES. ALL DIMENSIONS ARE CLEAR INSIDE SIZES. FIRST FIGURE OF DUCT SIZE INDICATES DIMENSION OF FACE SHOWN OR INDICATED.

10. ALL DUCTWORK AND PIPING SHOWN ON PLANS ARE DIAGRAMMATIC AND SHALL NOT BE SCALED TO DETERMINE EXACT LOCATION. EXACT LOCATION SHALL BE COORDINATED BY THE CONTRACTOR AND DIMENSIONED ON THE SHOP DRAWINGS.

11. CERTAIN VERTICAL AND HORIZONTAL DIMENSIONS ARE SHOWN IN DUCTS TO INDICATE THEIR GENERAL POSITION IN RELATIONSHIP TO THE SYSTEMS WITHIN THE SPACE AVAILABLE FOR SYSTEM INSTALLATION, PROVIDE ADDITIONAL OFFSETS SIMILAR TO THOSE SHOWN AS REQUIRED, AND COORDINATE WITH INSTALLATION REQUIREMENTS OF OTHER SYSTEMS AT NO ADDITIONAL COST TO OWNER.

12. IN LIEU OF RECTANGULAR DUCT AS SHOWN ON PLAN, CONTRACTOR HAS OPTION TO USE ROUND OR OVAL DUCTWORK WHERE SPACE PERMITS, SIZING SHALL BE BASED ON EQUAL FRICTION METHOD. FOR DUCTWORK ABOVE EXPOSED CEILINGS, REVISIONS SHALL BE APPROVED BY THE ARCHITECT.

13. COORDINATE REGISTER, DIFFUSER AND GRILLE LOCATIONS WITH CEILING SUPPORT MEMBERS AND LIGHTING FIXTURES. FINISHED CEILING CONFIGURATION SHALL FORM A FULLY INTEGRATED INSTALLATION IN EACH FINISHED SPACE; REFER TO ARCHITECTURAL REFLECTED CEILING PLANS FOR REQUIRED COORDINATED LAYOUT.

14. INSTALL ALL PIPING AND DUCTWORK TO AVOID ARCHITECTURAL, FRAMING, STRUCTURAL MEMBERS. AND OTHER OBSTRUCTIONS. COORDINATE PIPING AND DUCTWORK LOCATION WITH ALL APPLICABLE CONTRACT DRAWINGS AND INSTALLATION WORK OF OTHER TRADES PRIOR TO PLACING SLEEVES IN FLOORS OR WALLS.

15. INSTALL ALL DUCTWORK CONCEALED IN FURRED WALL AND CEILING UNLESS OTHERWISE NOTED.

16. TOTAL AIR STATIC PRESSURE NOTED IN SCHEDULES INCLUDES DUCT SYSTEM, TERMINAL UNITS, FILTERS, COILS, ETC. IT DOES NOT INCLUDE INTERNAL CASING LOSS OR SYSTEM EFFECT UNLESS OTHERWISE NOTED. TOTAL AIR STATIC PRESSURE DOES NOT INCLUDE CONTRACTOR'S DEVIATIONS FROM CONTRACT DOCUMENT.

17. SCHEDULE ALL WORK WITH THE FACILITY INCLUDING CONSTRUCTION ACCESS AND STORAGE. THE CONSTRUCTION SCHEDULE PROCEDURE SHALL BE APPROVED BY THE FACILITY PRIOR TO THE START OF CONSTRUCTION.

18. CONTRACTOR SHALL PROVIDE DUST COVERS AS REQUIRED TO CONTAIN DUST AND DEBRIS WITHIN CONSTRUCTION AREA. BROOM CLEAN ALL AREAS EACH DAY. KEEP DIRT AND DUST TO A MINIMUM.

19. WORK SHALL BE EXECUTED IN A CAREFUL AND ORDERLY MANNER WITH THE LEAST POSSIBLE DISTURBANCE TO THE PUBLIC AND OCCUPANTS OF THE FACILITY.

20. CONTRACTOR SHALL ASSUME SOLE RESPONSIBILITY FOR SAFETY OF ALL PERSONS ON OR ABOUT THE CONSTRUCTION SITE, IN ACCORDANCE WITH APPLICABLE LAWS AND CODES. GUARD ALL HAZARDS IN ACCORDANCE WITH THE SAFETY PROVISIONS OF THE LATEST MANUAL OF ACCIDENT PREVENTION PUBLISHED BY THE ASSOCIATED GENERAL CONTRACTORS OF AMERICA AND OSHA.

21. SECURELY FASTEN ALL PIPING AND DUCTWORK WITHIN STRUCTURES TO THE BUILDING CONSTRUCTION BY MEANS OF HANGERS, SUPPORTS, GUIDE ANCHORS, AND SWAY BRACE SEISMIC RESTRAINTS TO MAINTAIN ALIGNMENT. TO PREVENT SAGGING, AND TO PREVENT NOISE AND EXCESSIVE STRAIN DUE TO MOVEMENT UNDER OPERATING CONDITIONS. COORDINATE ANCHORING POINTS TO ASSURE STRUCTURAL INTEGRITY DURING NORMAL OPERATION AND SEISMIC EVENTS.

22. PIPE SUPPORTS SHALL BE DESIGNED TO INCLUDE THE WEIGHT OF THE PIPE, FITTINGS, VALVES, AND WEIGHT OF THE CONTENTS OF THE PIPE.

23. INSTALL WALL-MOUNTED ROOM THERMOSTATS SO THEY ARE ACCESSIBLE IN ACCORDANCE WITH T-24 AND REASONABLE INTERPRETATIONS OF ADA. OTHERWISE, COORDINATE INSTALLATION LOCATION AND HEIGHT WITH ALL TRADES PRIOR TO THERMOSTAT ROUGH-IN.

24. PROVIDE FLEXIBLE CONNECTIONS AT ALL VIBRATION ISOLATED EQUIPMENT AND AS INDICATED ON FLOW DIAGRAMS, DETAILS, AND AS OTHERWISE SPECIFIED.

25. PROVIDE A TIGHT SEAL OF INCOMBUSTIBLE MATERIAL (U.L. APPROVED) AROUND ALL DUCTWORK AND PIPING WHICH PENETRATE FIRE SEPARATIONS.

26. COORDINATE THE LOCATION AND QUANTITY OF ALL ACCESS PANELS. PANELS ARE REQUIRED IN CEILINGS FOR ALL TERMINAL BOXES, DAMPERS, VALVES, CONTROLS, AND OTHER ITEMS REQUIRING ROUTINE MAINTENANCE OR ADJUSTMENT, AND SHALL BE FURNISHED AND INSTALLED IN ACCORDANCE WITH ARCHITECTURAL SPECIFICATIONS. WHERE ACCESS PANELS ARE NOT SHOWN FOR VOLUME DAMPER ACCESS, PROVIDE CEILING MOUNTED REMOTE OPERATED VOLUME DAMPER CONTROL.

27. PROVIDE PIPE SUPPORTS NOT MORE THAN 12 INCHES FROM THE POINT OF CHANGE OF DIRECTION OF A PIPE RUN IN BOTH HORIZONTAL AND VERTICAL PLANES.

28. PROVIDE OPERATING HANDLES FOR ALL VALVES AND COCKS SUPPLIED WITHOUT INTEGRAL OPERATORS.

29. ALL PIPE SIZES ARE IN INCHES. PIPE SIZES NOT SHOWN ON PLAN SHALL BE SIZED NOT TO EXCEED 3-FEET OF HEAD PER 100-FEET LENGTH.

30. PROVIDE VALVES AND OTHER PIPING SPECIALTIES SAME SIZE AS LINE SIZE UNLESS OTHERWISE NOTED.

31. FURNISH AND INSTALL MANUAL AIR DAMPERS AT ALL DUCT BRANCH TAKEOFFS TO A SINGLE SUPPLY DIFFUSER.

FIRE MARSHAL NOTES

1. FIRE DAMPERS AND COMBINATION FIRE/SMOKE DAMPERS SHALL BE INSTALLED STRICTLY IN ACCORDANCE WITH THE MANUFACTURER'S INSTRUCTIONS. MANUFACTURER'S INSTRUCTIONS SHALL BE MADE AVAILABLE TO THE INSPECTING AUTHORITY. DETAILS SHOWN ARE FOR REFERENCE ONLY.

2. AIR MOVING SYSTEMS SUPPLY AN EXCESS OF 2000 CUBIC FEET PER MINUTE (CFM) TO ENCLOSED SPACES WITHIN BUILDINGS SHALL BE EQUIPPED WITH AN AUTOMATIC SHUTOFF. AUTOMATIC SHUTOFF SHALL BE ACCOMPLISHED BY INTERRUPTING THE POWER SOURCE IF THE AIR-MOVING EQUIPMENT UPON DETECTION OF SMOKE IN THE MAIN SUPPLY-AIR DUCT SERVED BY SUCH EQUIPMENT. SEE EXCEPTION (609, CMC).

3. WHEN THE AUTOMATIC ACTIVATION OF A FIRE/SMOKE DAMPER OCCURS, THE HVAC SYSTEM SERVING SUCH DAMPERS SHALL IMMEDIATELY SHUT DOWN. THE HVAC SYSTEM SHALL NOT BE RESTARTED AGAIN UNTIL ALL SUCH DAMPERS ARE RESET AND FULLY OPENED.

4. COMPLIANCE WITH THE 2016 CMC REQUIREMENT 608 (PREVIOUSLY 609) SHALL BE MET FOR AIR HANDLING UNITS (AHU) / AIR MOVING SYSTEM GLOBAL / AGGREGATE SIMULTANEOUS SMOKE SHUTDOWN OF AREA SERVED PER CSFM INTERPRETATION # 02-024 & 08-065 UPON ACTIVATION OF ANY SINGLE DUCT SMOKE DETECTOR.

5. ALL AHU / HVAC UNIT DUCT-SMOKE DETECTORS SHALL BE CONNECTED TO BUILDING FIRE ALARM PANEL TO INITIATE A SUPERVISORY SIGNAL UPON ACTIVATION, BE INTERCONNECTED AND SHALL ALL SHUT DOWN SIMULTANEOUSLY UPON ACTIVATION OF ANY ONE SINGLE DETECTOR.

6. ALL AHU / HVAC UNIT DUCT-SMOKE DETECTORS SHALL BE TESTED BY MANOMETER TO INSURE AIR VOLUME AND VELOCITIES ARE WITHIN THE TOLERANCE SPECIFICATIONS OF THE RATINGS REQUIRED BY THE MANUFACTURER'S DATA ON EACH DUCT-SMOKE DETECTOR INSTALLED WITHIN THE UNIT / DUCTWORK PER 2016 NFPA 72-17.7.4 & 2016 CMC 608.

MECHANICAL SHEET LIST

SHEET NUMBER	SHEET NAME
M0-1	GENERAL NOTES, LEGENDS & ABBREVIATIONS
M0-2	MECHANICAL SCHEDULES
M0-3	TITLE 24 COMPLIANCE
M0-4	TITLE 24 COMPLIANCE
M0-5	TITLE 24 COMPLIANCE
M0-6	MECHANICAL SITE PLAN
MZ1-1	MECH ZONING PLAN 1ST FLOOR PLAN
MZ1-2	MECH ZONING PLAN 2ND FLOOR PLAN
M1-1	MECH 1ST FLOOR PLAN
M1-2	MECH 2ND FLOOR PLAN
M3-1	MECH ROOF PLAN
M4-1	MECHANICAL SECTIONS
M5-1	CONTROLS
M5-2	CONTROLS
M5-3	CONTROLS
M7-1	DETAILS
M7-2	DETAILS
M7-3	DETAILS
M7-4	DETAILS
M7-5	DETAILS
M7-6	DETAILS
MP1-1	MECH PIPING 1ST FLOOR PLAN
MP1-2	MECH PIPING 2ND FLOOR PLAN
MP3-1	MECH PIPING ROOF PLAN

4/8/2019 5:58:41 PM

DUCT LEGEND

SINGLE LINE SYMBOL	DOUBLE LINE SYMBOL	DESCRIPTION
24x12	24x12	RECTANGULAR DUCT - WIDTH x DEPTH (PLAN VIEW) DEPTH x WIDTH (SECTION VIEW)
26x14L	26x14L	ACOUSTICALLY LINED RECTANGULAR DUCT-DIMENSIONS ARE OUTSIDE
		MANUAL AIR DAMPER
R OR D	RISE OR DROP	RISE OR DROP DUCT IN DIRECTION OF AIR FLOW
	OR	RECTANGULAR TO RECTANGULAR TRANSISTION , MAX. SLOPE OF 1:3 RECTANGULAR TO ROUND TRANSITION , MAX. SLOPE OF 1:3
	W, R, R/W = 1.5	ELBOW, RECTANGULAR, SMOOTH RADIUS, WITHOUT TURNING VANES
		CONVERGING OR DIVERGING TEE, 45˚ ENTRY, RECTANGULAR MAIN AND BRANCH. WHEN REDUCING MAIN, SIDE OF TAKE OFF OR ENTRY BRANCH TO BE FLAT, OTHER SIDES MAX. SLOPE OF 1:3
		CONICAL DUCT TAKE OFF FROM RECTANGULAR VIA SPIN-IN W/DAMPER AND SCOOP
	ROUND DUCT	ROUND DUCT TAKE OFF FROM RECTANGULAR VIA SMOOTH CONVERGING BELL MOUTH
		3-WAY RECTANGULAR SPLIT WITH TWO TRANSITIONAL ELBOWS AND TRANSITIONING MAIN. DOWNSTREAM MAD'S ON THE TREE BRANCHES. THROATS SIZED FOR EQUAL PRESSURE DROP.
		FOR CONCEALED DUCT: DROP TO DIFFUSER SHALL BE FULL SIZE OF DIFFUSER NECK. FOR EXPOSED DUCT: DROP SHALL BE FULL SIZE OF OD DIFFUSER FRAME, FLANGE FOR MOUNITING DIFFUSER TURNED IN. AIR EXTRACTOR AND EQUALIZER GRID AT CONNECTION TO MAIN.
		SUPPLY AIR, SUPPLY AIR DUCT IN SECTION, SUPPLY DROP
		RETURN AIR, RETURN AND OUTSIDE AIR DUCT IN SECTION, RETURN AIR DROP
		EXHAUST AIR, EXHAUST AIR DUCT IN SECTION, EXHAUST AIR DROP
		FLEXIBLE DUCT (ROUND)
		FLEXIBLE DUCT (FABRIC)
MAD, 18"DIA., 10"DIA., 12"DIA.	12"DIA.	45° REDUCING LATERAL FITTING
MAD, 18"DIA., 10"DIA.	18"DIA., 10"DIA., 12"DIA.	90° REDUCING TEE FITTING
		LINEAR DIFFUSER WITH PLENUM

MEP COMPONENT ANCHORAGE NOTE

ALL MECHANICAL, PLUMBING, AND ELECTRICAL COMPONENTS SHALL BE ANCHORED AND INSTALLED PER THE DETAILS ON THE DSA APPROVED CONSTRUCTION DOCUMENTS. WHERE NO DETAIL IS INDICATED, THE FOLLOWING COMPONENTS SHALL BE ANCHORED OR BRACED TO MEET THE FORCE AND DISPLACEMENT REQUIREMENTS PRESCRIBED IN THE 2016 CBC, SECTIONS 1616A.1.18 THROUGH 1616A.1.26 AND ASCE 7-10 CHAPTER 13, 26 AND 30.

1. ALL PERMANENT EQUIPMENT AND COMPONENTS.
2. TEMPORARY OR MOVABLE EQUIPMENT THAT IS PERMANENTLY ATTACHED (e.g. HARD WIRED) TO THE BUILDING UTILITY SERVICES SUCH AS ELECTRICITY, GAS OR WATER.
3. MOVABLE EQUIPMENT WHICH IS STATIONED IN ONE PLACE FOR MORE THAN 8 HOURS AND HEAVIER THAN 400 POUNDS ARE REQUIRED TO BE ANCHORED WITH TEMPORARY ATTACHMENTS.

THE ATTACHEMENT OF THE FOLLOWING MECHANICAL AND ELECTRICAL COMPONENTS SHALL BE POSITIVELY ATTACHED TO THE STRUCTURE, BUT THE ATTACHMENT NEED NOT BE DETAILED ON THE PLANS. THESE COMPONENTS SHALL HAVE FLEXIBLE CONNECTIONS PROVIDED BETWEEN THE COMPONENT AND ASSOCIATED DUCTWORK, PIPING, AND CONDUIT.

A. COMPONENTS WEIGHING LESS THAN 400 POUNDS AND HAVE A CENTER OF MASS LOCATED 4 FEET OR LESS ABOVE THE ADJACENT FLOOR OR ROOF LEVEL THAT DIRECTLY SUPPORT THE COMPONENT.

B. COMPONENTS WEIGHING LESS THAN 20 POUNDS, OR IN THE CASE OF DISTRIBUTION SYSTEMS, LESS THAN 5 POUNDS PER FOOT, WHICH ARE SUSPENDED FROM A ROOF OR FLOOR OR HUNG FROM A WALL.

FOR THOSE ELEMENTS THAT DO NOT REQUIRE DETAILS ON THE APPROVED DRAWINGS, THE INSTALLATION SHALL BE SUBJECT TO THE APPROVAL OF THE DESIGN PROFESSIONAL IN GENERAL RESPONSIBLE CHARGE OR STRUCTURAL ENGINEER DELEGATED RESPONSIBILITY AND THE DSA DISTRICT STRUCTURAL ENGINEER. THE PROJECT INSPECTOR WILL VERIFY THAT ALL COMPONENTS AND EQUIPMENT HAVE BEEN ANCHORED IN ACCORDANCE WITH ABOVE REQUIREMENTS.

GREEN BUILDING CODE NOTES

1. A FINAL REPORT FOR THE TESTING AND ADJUSTING OF ALL NEW SYSTEMS SHALL BE COMPLETED PRIOR TO FINAL APPOROVAL BY THE FIELD INSPECTOR. THIS REPORT SHALL BE SIGNED BY THE INVIDIVIDUAL RESPONSIBLE FOR PERFORMING THESE SERVICES.
2. AN OPERATING & SYSTEMS MANUAL SHALL BE PROVIDED TO THE OWNER OR REPRESENTATIVE AND TO THE FIELD INSPECTOR AT THE TIME OF FINAL INSPECTION.
3. IF THE NEW HVAC SYSTEM IS USED DURING CONSTRUCTION, USE RETURN AIR FILTERS WITH A MERV OF 8. REPLACE ALL FILTERS IMEEDIATELY PRIOR TO OCCUPANCY.
4. ALL DUCT AND OTHER RELATED AIR DISTRIBUTION COMPONENT OPENING SHALL BE COVERED WITH TAPE, PLASTIC, OR SHEET METAL UNTIL THE FINAL STARTUP OF THE HEATING, COOLING AND VENTILATING EQUIPMENT.
5. THE HVAC, REFRIGERATION AND FIRE SUPPRESSION EQUIPMENT SHALL NOT CONTAIN CFC OR HALONS.
6. HVAC AND WATER SYSTEMS TO BE BALANCED PER AABBC STANDARDS.
7. SYSTEM DESCRIPTION: HVAC SYSTEM CONSIST OF MULTIPLE ZONE VARIABLE VOLUME & CONSTANT VOLUME AIR HANDLING SYSTEMS AND STAND ALONE SPLIT SYSTEM DX UNITS.

MECHANICAL LEGEND

SYMBOL	ABBREVIATION	DESCRIPTION
	ABV	ABOVE
	ABC	ABOVE CEILING
	AF	ABOVE FLOOR
	AFF	ABOVE FINISHED FLOOR
	AFG	ABOVE FINISHED GRADE
	AD , AP	ACCESS DOOR , ACCESS PANEL
	AC	AIR CONDITIONING
	AHU	AIR HANDLING UNIT
	APD	AIR PRESSURE DROP, INCHES WATER COLUMN
	AB	ANCHOR BOLT
	ANV	ANGLE VALVE
	AAV	AUTOMATIC AIR VENT
	BV	BALL VALVE
	BDD	BACK DRAFT DAMPER
	BFP	BACKFLOW PREVENTER
	BF	BELOW FLOOR
	BHP	BRAKE HORSE POWER
	BTU(H)	BRITISH THERMAL UNITS (PER HOUR)
	BFV	BUTTERFLY VALVE
BPT	BPT	BYPASS TIMER
	CBV	CALIBRATED BALANCE VALVE
	CC	CENTER TO CENTER
	CLG	CEILING
	CEF	CEILING EXHAUST FAN
	CKV	CHECK VALVE
CHWS	CHWS	CHILLED WATER SUPPLY PIPING
CHWR	CHWR	CHILLED WATER RETURN PIPING
	CP	CIRCULATING PUMP
	CLR	CLEAR
	CONC	CONCRETE
		CONCENTRIC REDUCER
CD	CD	CONDENSATE DRAIN
	COND	CONDENSER
	CONN	CONNECT OR CONNECTION
	CONT	CONTINUATION
	CONTR	CONTRACTOR
f	CFM	CUBIC FEET OF AIR FLOW PER MINUTE
	DPR	DAMPER
°F		DEGREES FAHRENHEIT
–	DIA	DIAMETER , PHASE
	DL	DOOR LOUVER
	DN	DOWN
	DR	DRAIN
	DB	DRY BULB (DEGREES FAHRENHEIT)
DS	DS	DYNAMIC SENSOR
		ECCENTRIC REDUCER
	EP	ELECTRICAL PANEL
	EL	ELEVATION
	ENT	ENTERING
	EDB	ENTERING DRY BULB
	EW	ENTERING WATER
	EWT	ENTERING WATER TEMPERATURE
	EWB	ENTERING WET BULB
	EVAP	EVAPORATOR
	EC	EVAPORATIVE COOLER
	EA	EXHAUST AIR
	EAD	EXHAUST AIR DAMPER
	EF	EXHAUST FAN
	(E), EXIST	EXISTING
	(E)	EXISTING TO BE REMOVED
	ESP	EXTERNAL STATIC PRESSURE
	FPM	FEET PER MINUTE
	FIN	FINISH
F	FD	FIRE DAMPER
FS	FS	FIRE/SMOKE DAMPER
	FC	FLEXIBLE CONNECTION
	FLR	FLOOR
		FLOW IN DIRECTION OF ARROW
	FLV	FLOW LIMITING VALVE
	FA	FROM ABOVE
	FB	FROM BELOW
	FLA	FULL LOAD AMPS
	GCK	GAGE COCK
	GPH	GALLONS PER HOUR
	GPM	GALLONS PER MINUTE
	GV	GATE VALVE
	GLV	GLOBE VALVE
	GALV	GALVANIZED
	GI	GALVANIZED IRON
	GA	GAUGE
	HTG	HEATING
	HW	HOT WATER
HWS	HWS	HOT WATER SUPPLY PIPING
HWR	HWR	HOT WATER RETURN PIPING

MECHANICAL LEGEND cont'd

SYMBOL	ABBREVIATION	DESCRIPTION
	IE	INVERT ELEVATION
	KW	KILOWATTS
	KWH	KILOWATT HOUR
	KXA	KITCHEN EXHAUST AIR
	LDB	LEAVING DRY BULB IN DEGREES FAHRENHEIT
	LWB	LEAVING WET BULB IN DEGREES FAHRENHEIT
	LRA	LOCKED ROTOR AMPERES
	LVR	LOUVER
	MA	MAKE UP AIR
	MAD, MD	MANUAL AIR DAMPER
	MAV	MANUAL AIR VENT
	MFR	MANUFACTURER
	MAX	MAXIMUM
	MIN	MINIMUM
	MCC	MOTOR CONTROL CENTER
	(N)	NEW
	OC	ON CENTER
	OSA	OUTSIDE AIR
	OD	OUTSIDE DIAMETER
	OV	OUTLET VELOCITY
	OH	OVERHEAD
		PETE'S PLUG
		PIPE ANCHOR
		PIPE DROP
		PIPE GUIDE
		PIPE RISE
		PITCH DOWN IN DIRECTION OF FLOW
	POC	POINT OF CONNECTION
	LBS	POUNDS
	PSI (G) (A)	POUNDS PER SQUARE INCH (GAUGE) (ABSOLUTE)
	PD	PRESSURE DROP
	PG	PRESSURE GAUGE
	PRV	PRESSURE REDUCING VALVE
RG	RG	REFRIGERANT GAS PIPING
RS	RS	REFRIGERANT SUCTION PIPING
RL	RL	REFRIGERANT LIQUID PIPING
	RV or P&TRV	RELIEF VALVE OR PRESSURE & TEMPERATURE RELIEF VALVE
	RA	RETURN AIR
	RAD	RETURN AIR DAMPER
	RPM	REVOLUTIONS PER MINUTE
	RLA	RUNNING LOAD AMPERES
	SB	SECURITY BARS
	SM	SHEET METAL
	SWR	SIDE WALL REGISTER
SD	SD	SMOKE DAMPER
SD	SKD	SMOKE DETECTOR
	SQFT, FT2``~~	SQUARE FEET
	SQIN, IN2`	SQUARE INCHES
	SP	STATIC PRESSURE
	SPD	STATIC PRESSURE DROP
	STR	STRAINER
	SA	SUPPLY AIR
	SF	SUPPLY FAN
	TCP	TEMPERATURE CONTROL PANEL
	TCV	TEMPERATURE CONTROL VALVE
TS X		TEMPERATURE SENSOR, "X" INDICATES DEVICE CONTROLLED
		THERMOMETER
T X	T	THERMOSTAT, "X" INDICATES DEVICE CONTROLLED
	MBH	THOUSAND BRITISH THERMAL UNITS PER HOUR
	TA	TO ABOVE
	TB	TO BELOW
	TD	TRANSFER DUCT
	TP	TOTAL PRESSURE
	TSP	TOTAL STATIC PRESSURE
	TYP	TYPICAL
	UG	UNDERGROUND
	UCD	UNDER CUT DOOR
	UON	UNLESS OTHERWISE NOTED
	VFD	VARIABLE FREQUENCY DRIVE
	VLV	VALVE
		VALVE IN RISER (TYPE AS INDICATED OR NOTED)
		VALVE IN VALVE BOX
	WPD	WATER PRESSURE DROP
	W	WATTS
	WT	WEIGHT
	WB	WET BULB
	WMS	WIRE MESH SCREEN
	WP	WORKING PRESSURE
		2-WAY CONTROL VALVE
		3-WAY CONTROL VALVE

PIPING, DUCTWORK & ELECTRICAL DISTRIBUTION SYSTEM EMBRACING NOTE

PIPING, DUCTWORK, AND ELECTRICAL DISTRIBUTION SYSTEMS SHALL BE BRACED TO COMPLY WITH THE FORCES AND DISPLACEMENTS PRESCRIBED IN ASCE 7-10 SECTION 13.3 AS DEFINED IN ASCE 7-10 SECTION 13.6.5.6, 13.6.7, 13.6.8, AND 2016 CBC, SECTIONS 1616A.1.23, 1616A.1.24, 1616A.1.25 AND 1616A.1.26.

THE METHOD OF SHOWING BRACING AND ATTACHMENTS TO THE STRUCTURE FOR THE IDENTIFIED DISTRIBUTION SYSTEM ARE AS NOTED BELOW. WHEN BRACING AND ATTACHMENTS ARE BASED ON PREAPPROVED INSTALLATION GUIDE (e.g., SMACNA OR OSHPD OPM). COPIES OF THE BRACING SYSTEM INSTALLATION GUIDE OR MANUAL SHALL BE AVAILABLE ON THE JOBSITE PRIOR TO THE START OF AND DURING THE HANGING AND BRACING OF THE DISTRIBUTION SYSTEMS. THE STRUCTURAL ENGINEER OF RECORD SHALL VERIFY THE ADEQUACY OF THE STRUCTURE TO SUPPORT THE HANGER AND BRACE LOADS.

MECHANICAL PIPING (MP), MECHANICAL DUCTS (MD), PLUMBING PIPING (PP), ELECTRICAL DISTRIBUTION SYSTEMS (E):

MP ☐ MD ☐ PP ☐ E ☐ — OPTION 1: DETAILED ON THE APPROVED DRAWINGS WITH PROJECT SPECIFIC NOTES AND DETAILS

MP ☒ MD ☒ PP ☐ E ☐ — OPTION 2: SHALL COMPLY WITH THE APPLICABLE OSHPD PRE-APPROVED (OPM #) # OPM-0043-13

MP ☒ MD ☒ PP ☐ — OPTION 3: SHALL COMPLY WITH THE SMACNA SEISMIC RESTRAINT MANUAL. OSHP EDITION (2009), INCLUDING ANY ADDENDA. FASTENERS AND OTHER ATTACHMENTS NOT SPECIFICALLY IDENTIFIED IN THE SMACNA SEISMIC RESTRAINT MANUAL, OSHPD EDITION, ARE DETAILED ON THE APPROVED DRAWINGS WITH PROJECT SPECIFIC NOTES AND DETAILS. THE DETAILS SHALL ACCOUNT FOR THE APPLICABLE SEISMIC HAZARD LEVEL A AND CONNECTION LEVEL 1 FOR THE PROJECT AND CONDITIONS.

DSA NOTES

1. ALL WORK SHALL CONFORM TO 2016 EDITION TITLE 24, CALIFORNIA CODE OF REGULATIONS (CCR).
2. THE SCOPE OF WORK; CLEARLY INDICATED THE SCOPE OF WORK ON THE COVER SHEET OR GENERAL NOTE SHEET OF THE DRAWINGS.
3. FABRICATION AND INSTALLATION OF DEFERRED SUBMITTAL ITEMS SHALL NOT BE STARTED UNTIL CONTRACTOR'S DRAWINGS, SPECIFICATIONS, AND ENGINEERING CALCULATIONS FOR THE ACTUAL SYSTEMS TO BE INSTALLED HAVE BEEN ACCEPTED AND SIGNED BY THE ARCHITECT OR STRUCTURAL ENGINEER AND APPROVED BY THE DSA. LIST DEFERRED SUBMITTAL ITEMS FOR THIS PROJECT.
4. CHANGE TO THE APPROVED DRAWINGS AND SPECIFICATIONS SHALL BE MADE BY ADDENDA OR CONSTRUCTION CHANGE DOCUMENT (CCD) APPROVED BY DSA, AS REQUIRED BY SECTION 4-338, PART 1, TITLE 24, CCR.
5. A "DSA CERTIFIED" PROJECT INSPECTOR EMPLOYED BY THE DISTRICT (OWNER) AND APPROVED BY DSA SHALL PROVIDE CONTINUOUS INSPECTION OF THE WORK. THE DUTIES OF THE INSPECTOR ARE DEFINED IN SECTION 4-342, PART 1, TITLE 24, CCR.
6. A DSA ACCEPTED TESTING LABORATORY DIRECTLY EMPLOYED BY THE DISTRICT (OWNER) SHALL CONDUCT ALL THE REQUIRED TESTS AND INSPECTIONS FOR THE PROJECT.
7. THE INTENT OF THESE DRAWINGS AND SPECIFICATIONS IS THAT THE WORK OF THE ALTERATION, REHABILITATION OR RECONSTRUCTION IS TO BE IN ACCORDANCE WITH TITLE 24, CCR. SHOULD ANY EXISTING CONDITIONS SUCH AS DETERIORATION OR NON-COMPLYING CONSTRUCTION BE DISCOVERED WHICH IS NOT COVERED BY THE CONTRACT DOCUMENTS WHEREIN THE FINISHED WORK WILL NOT COMPLY WITH TITLE 24, CCR, A CONSTRUCTION CHANGE DOCUMENT (CCD), OR A SEPARATE SET OF PLANS AND SPECIFICATIONS, DETAILING AND SPECIFYING THE REQUIRED WORK SHALL BE SUBMITTED TO AND APPROVED BY DSA BEFORE PROCEEDING WITH THE WORK. (SECTION 4-317(C), PART 1, TITLE 24; CCR)
8. GRADING PLANS, DRAINAGE IMPROVEMENTS, ROAD AND ACCESS REQUIREMENTS AND ENVIRONMENTAL HEALTH CONSIDERATIONS SHALL COMPLY WITH ALL LOCAL ORDINANCES.

IDENTIFICATION STAMP
DIV. OF THE STATE ARCHITECT
APP. 03-119458 INC:
REVIEWED FOR
SS ☑ FLS ☑ ACS ☑
DATE: 05/23/2019

DIVISION OF THE STATE ARCHITECT
355 South Grand Avenue, Suite 2100
Los Angeles, CA 90012
ph: (213) 897-3995 fx:(213) 897-3159
agency

tBP architecture planning interiors
tBP/Architecture
4611 Teller Avenue
Newport Beach, CA 92660
ph: 949.673.0300 fx: 949.732.3895
architect

CAPITAL ENGINEERING CONSULTANTS, INC.
LONG BEACH, CALIFORNIA
CM - RH/SL/TS — PM - DESIGN TEAM
171221.00 — PROJECT NO.

REGISTERED PROFESSIONAL ENGINEER — CHRISTOPHER V. MERCURIO — M 34011 — EXPIRES 3/30/20 — MECHANICAL — STATE OF CALIFORNIA
DATE SIGNED: 04/05/19
consultant

COMPTON COLLEGE
INSTRUCTIONAL BUILDING No.2
COMPTON COMMUNITY COLLEGE DISTRICT
1111 E. ARTESIA BLVD. COMPTON, CA.
owner

tBP project number: 20998.00
file name:
drawn by: checked by:
date: 11 / 20 / 2018
rev: date: description:

THIS DRAWING AND THE DESIGNS, DEPICTIONS, IDEAS AND OTHER INFORMATION CONTAINED HEREIN CONSTITUTE UNPUBLISHED WORK OF tBP/ARCHITECTURE AND SHALL REMAIN PROPERTY OF tBP/ARCHITECTURE IN PERPETUITY. NO PART THEREOF SHALL BE REPRODUCED, DISCLOSED, DISTRIBUTED, SOLD, PUBLISHED OR OTHERWISE USED IN ANY WAY WITHOUT THE ADVANCED EXPRESS WRITTEN CONSENT OF tBP/ARCHITECTURE.

drawing title:
GENERAL NOTES, LEGENDS & ABBREVIATIONS

drawing no.
M0-1

drawing of

AIR HANDLING UNIT SCHEDULE

MODEL NO.	UNIT TAG	LOCATION	MANUFACTURER	SUPPLY AIR FANS									RETURN/EXHAUST AIR FANS									COOLING COILS										HEATING COILS							MIN OSA CFM	FILTERS		UNIT WEIGHT (LBS)	REMARKS	UNIT TAG
				FAN TYPE	SIZE (IN)	SA CFM	ESP (IN WG)	%Eff	Number of Fans	BHP EACH FAN	MOTOR HP EACH FAN	ELECTRICAL Volts/Phase/Hz	FAN TYPE	SIZE (IN)	RA CFM	ESP (IN WG)	%EFF	Number of Fans	BHP EACH FAN	MOTOR HP EACH FAN	ELECTRICAL Volts/Phase/Hz	EAT DB (F)	EAT WB (F)	LAT DB (F)	LAT WB (F)	TOTAL CAP (MBH)	COIL AREA (SF)	FLOW (GPM)	EWT (F)	LWT (F)	PD (FT-HD)	EAT DB (F)	LAT DB (F)	TOTAL CAP (MBH)	COIL AREA (SF) EACH	FLOW (GPM)	EWT (F)	LWT (F)		PRE-FILTERS MERV 8 (SF)	PRE-FILTERS MERV 13 (SF)			
C114138-FC-L	AHU-1	ROOF	ENERGY LABS	PLUG FAN	20	42,000	2.50	91	6	8.9	10	480/3/60	PLUG FAN	22.2	37,000	1.25	89	6	2.9	5.0	480/3/60	80.5	64.8	51.4	51.1	1,786	93	357	44	54	8.7	-	-	-	-	-	-	-	14,700	98	98	30,000	1-8	AHU-1

1. PROVIDE FACTORY APPLIED ANTI-CORROSION COATING.
2. ALL FAN MOTORS SHALL BE EQUIPPED WITH VFD SYSTEM.
3. SINGLE-POINT ELECTRICAL POWER SUPPLY FOR 480 V (MOTORS & COMPRESSORS) AND 120V (LIGHTS & CONTROLS).
4. MODULATING ECONOMIZER OUTSIDE AND RETURN AIR DAMPER.
5. MAGNEHELIC GAUGE.
6. PROVIDE SOUND ATTENUATORS ON SUPPLY AND RETURN DUCT MAINS.
7. PROVIDE 6" HIGH HOUSEKEEPING PAD. SEE 10/S0-1.6 FOR AHU MOUNTING DETAIL.
8. PROVIDE SMOKE DETECTORS INTERLOCK SMOKE DETECTOR WITH FANS TO SHUT DOWN UPON DETECTION OF SMOKE.

AIR DISTRIBUTION SCHEDULE

SUPPLY				RETURN/EXHAUST			
TAGGED	AIRFLOW RANGE	NECK SIZE ROUND	NECK SIZE SQUARE	TAGGED	AIRFLOW RANGE	NECK SIZE ROUND	NECK SIZE SQUARE
CD	100	6" DIA		RG,CE	100	6" DIA	
	120		6x6		120		6x6
	170	8" DIA			170	8" DIA	
	220		8x8		220		8x8
	270	10" DIA			270	10" DIA	
	340		10x10		340		10x10
	390	12" DIA			390	12" DIA	
	500		12x12		500		12x12
	530	14" DIA			530	14" DIA	
	690	16" DIA			690	16" DIA	
_x_SG/SR	(7)	(7)		_x_RG/EG	(7)	(7)	

NOTE:

1. AIRFLOW RANGE SELECTION ARE BASED ON NECK VELOCITY OF 500 FPM.
2. SUPPLY DIFFUSER THROWS SHALL BE 4-WAY DISCHARGE PATTERN UNLESS OTHERWISE INDICATED ON THE PLAN.
3. AIR DISTRIBUTION TYPE.

APPLICATION	SUPPLY MANUFACTURER TITUS	PRICE	KRUEGER	NOTE	RETURN/EXHAUST MANUFACTURER TITUS	PRICE	KRUEGER	NOTE
LAY-IN CEILING	PAS, PMC	PDS	1240P	(8)	PAR	PDDR	6690	(8)
HARD LID CEILING	PAS	PDDS	1240PE	(9)	PAR	PDDR	6490, 6690	(9)
WALL MOUNTED	350	540	880	(5)	300	710	S80	(6)
OPEN SPACE	TMR	RCD	RM1	(7)				

NOTE:

4. LINEAR AIR DIFFUSER, REFER TO SPECIFICATION AND FLOOR PLAN.
5. GRILLE SHALL HAVE ADJUSTABLE DOUBLE DEFLECTION BLADES. SEE FLOOR PLAN FOR SIZE.
6. GRILLE SHALL HAVE ZERO (0) AND SINGLE DEFLECTION BLADE. REFER TO FLOOR PLAN FOR SIZE.
7. SIZE AND AIRFLOW INFORMATION SHALL BE AS SHOWN ON FLOOR PLAN.
8. FACE MODULE SIZE SHALL BE 24x24
9. FACE MODULE SIZE BASED ON AIR DISTRIBUTION STANDARD DIMENSION.

AIR TERMINAL UNIT (VAV) SCHEDULE

UNIT TAG TYPE	MARK	"TITUS" ESV SERIES	MAX COOLING CFM	MIN HEATING COOLING	TOTAL AIR PRESSURE DROP	2-ROW REHEAT COIL MBH	GPM	PD (FT H2O)	CO2	OPERATING WEIGHT
VAV	1-1	12	1620	325	0.3	18.5	2.4	0.50	Yes	47
VAV	1-2	8	750	150	0.3	8.5	1.1	0.50	Yes	32
VAV	1-3	12	1470	95	0.3	16.7	2.2	0.50	Yes	47
VAV	1-4	12	1680	340	0.3	19.1	2.5	0.50	Yes	47
VAV	1-5	10	910	185	0.3	10.4	1.4	0.50	No	39
VAV	1-6	8	600	120	0.3	9.7	0.9	0.50	No	32
VAV	1-7	6	240	50	0.3	3.6	0.4	0.50	Yes	30
VAV	1-8	6	460	95	0.3	5.2	0.7	0.50	No	30
VAV	1-9	10	900	180	0.3	10.3	1.3	0.50	Yes	39
VAV	1-10	12	1800	360	0.3	20.5	2.7	0.50	Yes	47
VAV	1-11	10	1000	200	0.3	11.4	1.5	0.50	No	39
VAV	1-12	14	1860	375	0.3	21.2	2.7	0.50	Yes	58
VAV	1-13	14	1950	390	0.4	22.2	2.9	0.50	Yes	58
VAV	1-14	14	1980	395	0.4	22.6	2.9	0.50	Yes	58
VAV	1-15	14	1980	395	0.4	22.6	2.9	0.50	Yes	58
VAV	1-16	10	1200	240	0.3	13.7	1.8	0.50	No	39
VAV	1-17	12	1600	320	0.3	18.2	2.3	0.50	No	47
VAV	2-1	14	1980	400	0.4	22.6	2.9	0.50	Yes	58
VAV	2-2	14	1980	400	0.4	22.6	2.9	0.50	Yes	58
VAV	2-3	14	1980	400	0.3	22.6	2.9	0.50	Yes	58
VAV	2-4	8	700	140	0.3	8.0	1.0	0.50	No	32
VAV	2-5	6	480	100	0.3	5.5	0.7	0.50	No	30
VAV	2-6	6	220	50	0.3	2.5	0.3	0.50	Yes	30
VAV	2-7	6	440	90	0.3	5.0	0.7	0.50	No	30
VAV	2-8	6	350	70	0.3	4.0	0.6	0.50	No	30
VAV	2-9	6	440	90	0.3	5.0	0.7	0.50	No	30
VAV	2-10	10	980	200	0.3	11.2	1.5	0.50	No	39
VAV	2-11	8	700	140	0.3	8.0	1.0	0.50	Yes	32
VAV	2-12	14	1980	400	0.3	22.6	2.9	0.50	Yes	58
VAV	2-13	14	2220	445	0.4	25.3	3.3	0.50	Yes	58
VAV	2-14	14	2220	445	0.4	25.3	3.4	0.50	Yes	58
VAV	2-15	14	2280	460	0.4	26.0	3.6	0.50	Yes	58
VAV	2-16	10	1200	240	0.3	13.7	1.8	0.50	No	39
VAV	2-17	10	1200	240	0.3	13.7	1.8	0.50	No	39

1. SEE 8/M7-1 FOR TERMINAL UNIT MOUNTING DETAIL

AIR AND DIRT SEPERATOR SCHEDULE

UNIT TAG	LOCATION	MANUFACTURER	MODEL NO.	SYSTEM SERVED	FLOW (GPM)	CONNECTION SIZE (IN)	OPERATING WEIGHT (LBS)	REMARKS
AS-1	ROOF	SPIROTHERM	VHT-300	HHW	170	3	180	1-6

NOTES:

1. INSTALLATION SHALL BE PER MANUFACTURER'S RECOMMENDATION.
2. PROVIDE WITH BRONZE BLOW DOWN VALVE.
3. PROVIDE WITH BRASS AIR VENT
4. PROVIDE WITH BRONZE SKIM VALVE
5. PROVIDE WITH STAINLESS STEEL COALSCING MEDIUM.
6. SEE 2/M7-2 FOR EXPANSION TANK MOUNTING DETAIL.

SOUND ATTENUATOR SCHEDULE

UNIT TAG	LOCATION	MANUFACTURER	MODEL NO.	LENGTH	FACE VELOCITY	OCTAVE BAND 63	125	250	500	1000	2000	4000	8000
SA-1	ROOF	VIBRO ACOUSTICS	84x60-RD-MV-F1X36	36"	-1250	5	10	14	15	18	14	13	11
					0	4	8	13	14	17	15	13	11
					+1250	4	8	12	14	17	15	13	11

LENGTH	FACE VELOCITY 500	750	1000	1250	1500	1750	2000
36"	0.03	0.07	0.13	0.21	0.30	0.40	0.53

NOTES:

-

PUMP SCHEDULE

B+G SERIES NO.	MODEL NO.	UNIT TAG	LOCATION	SYSTEM SERVED	MANUFACTURER AND TYPE	GPM	TOTAL HEAD (FT)	MIN. EFF. (%)	RPM	BHP	MOTOR HP	ELECTRICAL DATA VOLTS/PHASE/HZ	VFD	ISOLATION BASE	UNIT WEIGHT (LBS)	REMARKS
e-1510	2AD-ES	P-1	ROOF	HHW	B&G End Suction	112	40	76	1750	1.4	2.0	480/3/60	yes	yes	180	1-5
e-1510	2AD-ES	P-2	ROOF	HHW	B&G End Suction	112	40	76	1750	1.4	2.0	480/3/60	yes	yes	180	1-5
e-80	3X3X9.5C	P-3	ROOF	CHW	B&G In-Line	360	40	71	1750	6.7	7.5	480/3/60	yes	yes	250	1-5

1. PROVIDE FACTORY SUPPLIED VFD.
2. SUCTION DIFFUSER WITH PUMP AND SYSTEM CONNECTION.
3. MECHANICAL SEAL.
4. INTERNAL VOLUTE WEAR RINGS, GALVANIZED DRIP PAN AND SPECIAL SPACER COUPLING
5. FOR ANCHORAGE SEE DETAIL 4 & 5/M7-4.

BOILER SCHEDULE

MODEL NO.	UNIT TAG	LOCATION	SYSTEM SERVED	MANUFACTURER AND TYPE	INPUT MBH	OUTPUT MBH	FLOW GPM	ENTERING WATER TEMP	LEAVING WATER TEMP	EFF %	ELECTRICAL V/PH/HZ	ISOLATION BASE	UNIT WEIGHT (LBS)	REMARKS
OFN 1751	B-1	ROOF	HHW	Lochinvar Non Condensing	1750	1680	112	150	180	96	120/1/60	Yes	2,500	1-5
OFN 1751	B-2	ROOF	HHW	Lochinvar Non Condensing	1750	1680	112	150	180	96	120/1/60	Yes	2,500	1-5

1. PROVIDE BACNET INTERFACE CARD (MODBUS COMMUNICATION CARD).
2. LOW WATER CUT-OFF WITH MANUAL RESET AND TEST.
3. OUTDOOR KIT.
4. PROVIDE CONDENSATE NEUTRALIZATION KIT.
5. SEE 9/M7-1 FOR BOILER MOUNTING DETAIL.

EXHAUST FANS SCHEDULE

MODEL NO.	UNIT TAG	LOCATION	AREA SERVED	MANUFACTURER	FAN TYPE	SIZE (IN)	CFM	TOTAL SP (IN WG)	BHP EACH FAN	FAN MOTOR HP	RPM	ELECTRICAL Volts/Phase/Hz	UNIT WEIGHT (LBS)	REMARKS
CUE-121-VG	EF-1	ROOF	RESTROOMS	Greenheck CUBE Series	Upblast	12.1	1,600	0.65	0.40	0.5	1,615	120/1/60	70	1-8
CUE-121-VG	EF-2	ROOF	RESTROOMS	Greenheck CUBE Series	Upblast	12.1	1,800	0.50	0.43	0.5	1,715	120/1/60	70	1-8

1. PROVIDE FACTORY SUPPLIED ROOF CURB.
2. DRAIN CONNECTION.
3. BIRDSCREEN.
4. MOTOR STARTER.
5. BACKDRAFT DAMPER.
6. MOTORIZED DAMPER.
7. CONNECT FACILITY EXISTING BAS. COORDINATE WITH BUILDING FACILITY FOR COMPATIBILITY.
8. SEE 7/M7-4 FOR EXHAUST FAN MOUNTING DETAIL.

VRF SPLIT SYSTEM - FAN COIL SCHEDULE FOR IT ROOMS

UNIT TAG	LOCATION	MANUFACTURER	MODEL	AREA SERVED	SERVING	SENS. CAP.	TOTAL CAP (BTUH)	CFM	ELECTRICAL V	PH	HZ	AMPS	WEIGHT (LBS)	Remarks
FCU-1	1ST FLOOR	LG	ARNU363SVA4	IT ROOM	TER	-	35,500	920	208-230	1	60	3	100	1-5
FCU-2	1ST FLOOR	LG	ARNU363SVA4	ELECT ROOM	TER	-	35,500	920	208-230	1	60	3	100	1-5
FCU-3	2ND FLOOR	LG	ARNU363SVA4	IT ROOM	TER	-	35,500	920	208-230	1	60	3	100	1-5
FCU-4	2ND FLOOR	LG	ARNU363SVA4	ELECT ROOM	TER	-	35,500	920	208-230	1	60	3	100	1-5

NOTES:

1. PROVIDE 30% EFF FILTER.
2. PROVIDE SECONDARY DRAIN PAN.
3. PROVIDE WITH CONDENSATE PUMP.
4. SEE 6/M7-4 FOR FCU MOUNTING DETAIL.
5. REFER TO MFR. SIZING GUIDE FOR REFRIGERANT LINE SIZES FOR GIVEN LENGTHS.

VRF SPLIT SYSTEM - CONDENSING UNIT SCHEDULE

UNIT TAG	LOCATION	MANUFACTURER	MODEL	AREA SERVED	CAPACITY (BTU/H)	AIRFLOW CAP	REF CHARGE (LBS)	ELECTRICAL V	PH	HZ	MCA	WEIGHT (LBS)	Remarks
CU-1	ROOF	LG	ARUN038GSS4	IT ROOM	38,000	3,885	6.6	208-230	1	60	25.0	250	1
CU-2	ROOF	LG	ARUN038GSS4	ELEC. ROOM	38,000	3,885	6.6	208-230	1	60	25.0	250	1
CU-3	ROOF	LG	ARUN038GSS4	IT ROOM	38,000	3,885	6.6	208-230	1	60	25.0	250	1
CU-4	ROOF	LG	ARUN038GSS4	ELEC. ROOM	38,000	3,885	6.6	208-230	1	60	25.0	250	1

NOTES:

1. SEE 9/S0-1.6 FOR DX CONDENSOR MOUNTING DETAIL.

CHEMICAL POT FEEDER SCHEDULE

UNIT TAG	LOCATION	MANUFACTURER	MODEL NO.	SYSTEM SERVED	CAPACITY (GAL)	MAX PRESSURE (PSI)	MAX TEMPERATURE (°F)	OPERATING WEIGHT (LBS)	REMARKS
CPF-1	ROOF	JL WINGERT	DB-5HD	BOILER	6	200	200	40	1, 2

NOTES:

1. INSTALLATION SHALL BE PER MANUFACTURER'S RECOMMENDATION.
2. SEE 10/S0-1.10 FOR CHEMICAL POT FEEDER MOUNTING DETAIL.

EXPANSION TANK SCHEDULE

UNIT TAG	LOCATION	MANUFACTURER	MODEL	SYSTEM SERVED	TANK VOLUME (GAL)	TANK SIZE (IN) DIAMETER	HEIGHT	TANK PRESSURE (PSI) CHARGE	MAX	OPERATING WEIGHT (LBS)	Remarks
ET-1	ROOF	ARMSTRONG	A300L	BOILERS	80	24	53	-	125.0	290	1-5

NOTES:

1. INSTALLATION SHALL BE PER MANUFACTURER'S RECOMMENDATION.
2. PROVIDE WITH ASME RATED, FACTORY MOUNTED SEISMIC MOUNTING BRACKETS.
3. EXPANION TANKS SHALL BE PRE-CHARGED @ 12 PSIG.
4. EXPANSION TANK SHALL BE PROVIDED WITH A FACTORY FITTED SIGH GLASS, AS REQUIRED BY CALIFORNIA CODE.
5. SEE 2/M7-2 FOR EXPANSION TANK MOUNTING DETAIL.

IDENTIFICATION STAMP
DIV. OF THE STATE ARCHITECT
APP. 03-119458 INC:
REVIEWED FOR
SS ☑ FLS ☑ ACS ☑
DATE:05/23/2019

DIVISION OF THE STATE ARCHITECT
355 South Grand Avenue, Suite 2100
Los Angeles, CA 90012
ph: (213) 897-3995 fx:(213) 897-3159
agency

tBP architecture planning interiors
tBP/Architecture
4611 Teller Avenue
Newport Beach, CA 92660
ph: 949.673.0300 fx: 949.732.3895
architect

CAPITAL ENGINEERING CONSULTANTS, INC.
LONG BEACH, CALIFORNIA
CM - RH/SL/TS 171221.00
PM - DESIGN TEAM PROJECT NO.

REGISTERED PROFESSIONAL ENGINEER
CHRISTOPHER V. MERCURIO
M 34011
EXPIRES 3/30/20
MECHANICAL
STATE OF CALIFORNIA
DATE SIGNED: 04/05/19
consultant

COMPTON COLLEGE
INSTRUCTIONAL BUILDING No.2
COMPTON COMMUNITY COLLEGE DISTRICT
1111 E. ARTESIA BLVD. COMPTON, CA.
owner

tBP project number: 20998.00
file name:
drawn by: checked by:
date: 11 / 20 / 2018
rev: date: description:

THIS DRAWING AND THE DESIGNS, DEPICTIONS, IDEAS AND OTHER INFORMATION CONTAINED HEREIN CONSTITUTE UNPUBLISHED WORK OF tBP/ARCHITECTURE AND SHALL REMAIN PROPERTY OF tBP/ARCHITECTURE IN PERPETUITY. NO PART THEREOF SHALL BE REPRODUCED, DISCLOSED, DISTRIBUTED, SOLD, PUBLISHED OR OTHERWISE USED IN ANY WAY WITHOUT THE ADVANCED EXPRESS WRITTEN CONSENT OF tBP/ARCHITECTURE.

drawing title:
MECHANICAL SCHEDULES

drawing no.
M0-2
drawing of

4/8/2019 5:58:43 PM

Project Name:	Instructional Building 2 Compton College	NRCC-PRF-01-E	Page 1 of 24
Project Address:	1111 E Artesia Blvd Compton 90221	Calculation Date/Time:	11:07, Mon, Nov 19, 2018
Compliance Scope:	NewComplete	Input File Name:	COMPTON EPRO_v7_T24.cibd16x

A. PROJECT GENERAL INFORMATION

1.	Project Location (city)	Compton	**8.**	Standards Version	Compliance2016
2.	CA Zip Code	90221	**9.**	Compliance Software (version)	EnergyPro 7.2
3.	Climate Zone	8	**10.**	Weather File	HAWTHORNE-NORTHROP-FLD_722956_CZ2010.epw
4.	Total Conditioned Floor Area in Scope	29,182 ft²	**11.**	Building Orientation (deg)	(N) 0 deg
5.	Total Unconditioned Floor Area	0 ft²	**12.**	Permitted Scope of Work	NewComplete
6.	Total # of Stories (Habitable Above Grade)	2	13	Building Type(s)	Nonresidential
7.	Total # of dwelling units	0	14	Gas Type	NaturalGas

B. COMPLIANCE RESULTS FOR PERFORMANCE COMPONENTS (Annual TDV Energy Use, kBtu/ft ²-yr) **§ 140.1**

BUILDING COMPLIES

1. Energy Component	2. Standard Design (TDV)	3. Proposed Design (TDV)	4. Compliance Margin (TDV)	5. Percent Better than Standard
Space Heating	8.81	21.23	-12.42	-141.0%
Space Cooling	72.29	26.01	46.28	64.0%
Indoor Fans	22.45	39.10	-16.65	-74.2%
Heat Rejection	--	0.10	-0.10	--
Pumps & Misc.	1.25	16.31	-15.06	-1204.8%
Domestic Hot Water	7.93	7.51	0.42	5.3%
Indoor Lighting	55.18	39.79	15.39	27.9%
COMPLIANCE TOTAL	**167.91**	**150.05**	**17.86**	**10.6%**
Receptacle	62.34	62.34	0.0	0.0%
Process	7.51	7.51	0.0	0.0%
Other Ltg	--	--	--	--
Process Motors	--	--	--	--
TOTAL	**237.76**	**219.90**	**17.9**	**7.5%**

Project Name:	Instructional Building 2 Compton College	NRCC-PRF-01-E	Page 2 of 24
Project Address:	1111 E Artesia Blvd Compton 90221	Calculation Date/Time:	11:07, Mon, Nov 19, 2018
Compliance Scope:	NewComplete	Input File Name:	COMPTON EPRO_v7_T24.cibd16x

C. PRIORITY PLAN CHECK/ INSPECTION ITEMS (in order of highest to lowest TDV energy savings)

1st	Space Cooling: Check envelope and mechanical
2nd	Indoor Lighting: Check lighting
3rd	Domestic Hot Water: Check mechanical
4th	Heat Rejection: Check envelope and mechanical
5th	Space Heating: Check envelope and mechanical
6th	Pumps & Misc.: Check mechanical
7th	Indoor Fans: Check envelope and mechanical

Compliance Margin By Energy Component (from Table B column 4)

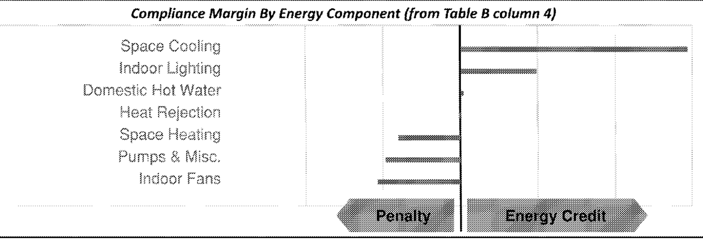

D. EXCEPTIONAL CONDITIONS

The aged solar reflectance and aged thermal emittance must be listed in the Cool Roof Rating Council database of certified products. For projects where initial reflectance is used, the initial reflectance must be listed, and the aged reflectance is calculated by the software program and used in the compliance model.

This project uses the Simplified Geometry Performance Modeling Approach which is not capable of modeling daylighting controls and assumes the prescriptive Secondary Daylit Control requirements are met. PRESCRIPTIVE COMPLIANCE documentation (form NRCC-LTI-02-E) for the requirements of section 140.6(d) Automatic Daylighting Controls in Secondary Daylit Zones is required.

This project includes Domestic Hot Water in the analysis. Please verify that Domestic Hot Water is included in the design for the permitted scope of work.

E. HERS VERIFICATION

This Section Does Not Apply

F. ADDITIONAL REMARKS

None Provided

Project Name:	Instructional Building 2 Compton College	NRCC-PRF-01-E	Page 3 of 24
Project Address:	1111 E Artesia Blvd Compton 90221	Calculation Date/Time:	11:07, Mon, Nov 19, 2018
Compliance Scope:	NewComplete	Input File Name:	COMPTON EPRO_v7_T24.cibd16x

G. COMPLIANCE PATH & CERTIFICATE OF COMPLIANCE SUMMARY

Identify which building components use the performance or prescriptive path for compliance. "NA"= not in project

For components that utilize the performance path, indicate the sheet number that includes mandatory notes on plans.

Building Component	Compliance Path		Compliance Forms *(required for submittal)*	Location of Mandatory Notes on Plans
Envelope	☒	Performance	NRCC-PRF-ENV-DETAILS (section of the NRCC-PRF-01-E)	
	☐	Prescriptive	NRCC-ENV-01 / 02 / 03 / 04 / 05 / 06-E	
	☐	NA		
Mechanical	☒	Performance	NRCC-PRF-MCH-DETAILS (section of the NRCC-PRF-01-E)	
	☐	Prescriptive	NRCC-MCH-01 / 02 / 03 / 04 / 05 / 06 / 07-E	
	☐	NA		
Domestic Hot Water	☒	Performance	NRCC-PRF-PLB-DETAILS (section of the NRCC-PRF-01-E)	
	☐	Prescriptive	NRCC-PLB-01-E	
	☐	NA		
Lighting (Indoor Conditioned)	☒	Performance	NRCC-PRF-LTI-DETAILS (section of the NRCC-PRF-01-E)	
	☐	Prescriptive	NRCC-LTI-01 / 02 / 03 / 04 / 05-E	
	☐	NA		
Covered Process: Commercial Kitchens	☐	Performance	S2 (section of the NRCC-PRF-01-E)	
	☐	Prescriptive	NRCC-PRC-01/ 03-E	
	☒	NA		
Covered Process: Computer Rooms	☐	Performance	S3 (section of the NRCC-PRF-01-E)	
	☐	Prescriptive	NRCC-PRC-01/ 04-E	
	☒	NA		
Covered Process: Laboratory Exhaust	☐	Performance	S4 (section of the NRCC-PRF-01-E)	
	☐	Prescriptive	NRCC-PRC-01/ 09-E	
	☒	NA		

Project Name:	Instructional Building 2 Compton College	NRCC-PRF-01-E	Page 4 of 24
Project Address:	1111 E Artesia Blvd Compton 90221	Calculation Date/Time:	11:07, Mon, Nov 19, 2018
Compliance Scope:	NewComplete	Input File Name:	COMPTON EPRO_v7_T24.cibd16x

G. COMPLIANCE PATH & CERTIFICATE OF COMPLIANCE SUMMARY

The following building components are only eligible for prescriptive compliance. Indicate which are relevant to the project.				*The following building components may have mandatory requirements per Part 6. Indicate which are relevant to the project.*			
Yes	**NA**	**Prescriptive Requirement**	**Compliance Forms**	**Yes**	**NA**	**Mandatory Requirement**	**Compliance Forms**
☐	☒	Lighting (Indoor Unconditioned) §140.6	NRCC-LTI-01 / 02 / 03 / 04 / 05-E	 ☐ ☐	 ☒ ☒	Commissioning: §120.8 Simple Systems Complex Systems	 NRCC-CXR-01 / 02 / 03 / 05-E NRCC-CXR-01 / 02 / 04 / 05-E
☐	☒	Lighting (Outdoor) §140.7	NRCC-LTO-01 / 02 / 03-E	☐	☒	Electrical: §130.5	NRCC-ELC-01-E
☐	☒	Lighting (Sign) §140.8	NRCC-LTS-01-E	☐	☒	Solar Ready: §110.10	NRCC-SRA-01 / 02-E
☐	☒	Solar Thermal Water Heating: §140.5	NRCC-STH-01-E	 ☐ ☐ ☐ ☐ ☐	 ☒ ☒ ☒ ☒ ☒	Covered Process: §120.6 Parking Garage Commercial Refrigeration Warehouse Refrigeration Compressed Air Process Boilers	NRCC-PRC-01-E NRCC-PRC-02-E NRCC-PRC-05-E NRCC-PRC-06/07/08-E NRCC-PRC-10-E NRCC-PRC-11-E

Project Name:	Instructional Building 2 Compton College	NRCC-PRF-01-E	Page 5 of 24
Project Address:	1111 E Artesia Blvd Compton 90221	Calculation Date/Time:	11:07, Mon, Nov 19, 2018
Compliance Scope:	NewComplete	Input File Name:	COMPTON EPRO_v7_T24.cibd16x

H. CERTIFICATE OF INSTALLATION, CERTIFICATE OF ACCEPTANCE & CERTIFICATE OF VERIFICATION SUMMARY (NRCI/NRCA/NRCV) –
Documentation Author to indicate which Certificates must be submitted for the features to be recognized for compliance
(Retain copies and verify forms are completed and signed to post in field for Field Inspector to verify).
See Tables G. and H. in MCH and LTI Details Sections for Acceptance Tests and forms by equipment.

Building Component	Compliance Forms *(required for submittal)*	Confirmed: Pass	Confirmed: Fail
Envelope	☒ NRCI-ENV-01-E - For all buildings	☐	☐
	☒ NRCA-ENV-02-F- NFRC label verification for fenestration	☐	☐
Mechanical	☒ NRCI-MCH-01-E - For all buildings with Mechanical Systems	☐	☐
	☒ NRCA-MCH-02-A- Outdoor Air	☐	☐
	☐ NRCA-MCH-03-A – Constant Volume Single Zone HVAC	☐	☐
	☐ NRCA-MCH-04-H- Air Distribution Duct Leakage	☐	☐
	☒ NRCA-MCH-05-A- Air Economizer Controls	☐	☐
	☒ NRCA-MCH-06-A- Demand Control Ventilation	☐	☐
	☒ NRCA-MCH-07-A – Supply Fan Variable Flow Controls	☐	☐
	☐ NRCA-MCH-08-A- Valve Leakage Test	☐	☐
	☐ NRCA-MCH-09-A – Supply Water Temp Reset Controls	☐	☐
	☐ NRCA-MCH-10-A- Hydronic System Variable Flow Controls	☐	☐
	☒ NRCA-MCH-11-A – Auto Demand Shed Controls	☐	☐
	☐ NRCA-MCH-12-A- Packaged Direct Expansion Units	☐	☐
	☐ NRCA-MCH-13-A- Air Handling Units and Zone Terminal Units	☐	☐
	☐ NRCA-MCH-14-A- Distributed Energy Storage	☐	☐
	☐ NRCA-MCH-15-A – Thermal Energy Storage	☐	☐
	☒ NRCA-MCH-16-A- Supply Air Temp Reset Controls	☐	☐
	☐ NRCA-MCH-17-A – Condensate Water Temp Reset Controls	☐	☐
	☐ NRCA-MCH-18-A- Energy Management Controls Systems	☐	☐
	☐ NRCV-MCH-04-H- Duct Leakage Test	☐	☐

Project Name:	Instructional Building 2 Compton College	NRCC-PRF-01-E	Page 6 of 24
Project Address:	1111 E Artesia Blvd Compton 90221	Calculation Date/Time:	11:07, Mon, Nov 19, 2018
Compliance Scope:	NewComplete	Input File Name:	COMPTON EPRO_v7_T24.cibd16x

H. CERTIFICATE OF INSTALLATION, CERTIFICATE OF ACCEPTANCE & CERTIFICATE OF VERIFICATION SUMMARY (NRCI/NRCA/NRCV) –
Documentation Author to indicate which Certificates must be submitted for the features to be recognized for compliance
(Retain copies and verify forms are completed and signed to post in field for Field Inspector to verify).
See Tables G. and H. in MCH and LTI Details Sections for Acceptance Tests and forms by equipment.

Building Component	Compliance Forms *(required for submittal)*	Confirmed: Pass	Confirmed: Fail
Plumbing	☒ NRCI-PLB-01-E - For all buildings with Plumbing Systems	☐	☐
	☐ NRCI-PLB-02-E - required on central systems in high-rise residential, hotel/motel application.	☐	☐
	☐ NRCI-PLB-03-E - Single dwelling unit systems in high-rise residential, hotel/motel application.	☐	☐
	☐ NRCI-PLB-21-E - HERS verified central systems in high-rise residential, hotel/motel application.	☐	☐
	☐ NRCI-PLB-22-E - HERS verified single dwelling unit systems in high-rise residential, hotel/motel application.	☐	☐
	☐ NRCV-PLB-21-H- HERS verified central systems in high-rise residential, hotel/motel application.	☐	☐
	☐ NRCV-PLB-22-H - HERS verified single dwelling unit systems in high-rise residential, hotel/motel application.	☐	☐
	☐ NRCI-STH-01-E - Any solar water heating	☐	☐
Indoor Lighting	☒ NRCI-LTI-01-E - For all buildings	☐	☐
	☐ NRCI-LTI-02-E - Lighting control system, or for an Energy Management Control System (EMCS)	☐	☐
	☐ NRCI-LTI-03-E - Line-voltage track lighting integral current limiter, or for a supplementary overcurrent protection panel used to energize only line-voltage track lighting	☐	☐
	☐ NRCI-LTI-04-E - Two interlocked systems serving an auditorium, a convention center, a conference room, or a theater	☐	☐
	☐ NRCI-LTI-05-E - Lighting Control Credit Power Adjustment Factor (PAF)	☐	☐
	☐ NRCI-LTI-06-E - Additional wattage installed in a video conferencing studio	☐	☐
	☒ NRCA-LTI-02-A - Occupancy sensors and automatic time switch controls.	☐	☐
	☒ NRCA-LTI-03-A - Automatic daylighting controls	☐	☐
	☒ NRCA-LTI-04-A - Demand responsive lighting controls	☐	☐
Outdoor Lighting	☐ NRCI-LTO-01-E – Outdoor Lighting	☐	☐
	☐ NRCI-LTO-02-E- EMCS Lighting Control System	☐	☐
	☐ NRCA-LTO-02-A - Outdoor Lighting Control	☐	☐
Sign Lighting	☐ NRCI-LTS-01-E – Sign Lighting	☐	☐
Electrical	☐ NRCI-ELC-01-E - Electrical Power Distribution	☐	☐
Photovoltaic	☐ NRCI-SPV-01-E Photovoltaic Systems	☐	☐

Project Name:	Instructional Building 2 Compton College	NRCC-PRF-01-E	Page 7 of 24
Project Address:	1111 E Artesia Blvd Compton 90221	Calculation Date/Time:	11:07, Mon, Nov 19, 2018
Compliance Scope:	NewComplete	Input File Name:	COMPTON EPRO_v7_T24.cibd16x

H. CERTIFICATE OF INSTALLATION, CERTIFICATE OF ACCEPTANCE & CERTIFICATE OF VERIFICATION SUMMARY (NRCI/NRCA/NRCV) –
Documentation Author to indicate which Certificates must be submitted for the features to be recognized for compliance
(Retain copies and verify forms are completed and signed to post in field for Field Inspector to verify).
See Tables G. and H. in MCH and LTI Details Sections for Acceptance Tests and forms by equipment.

Building Component	Compliance Forms *(required for submittal)*	Confirmed: Pass	Confirmed: Fail
Covered Process	☐ NRCI-PRC-01-E Covered Processes	☐	☐
	☐ NRCA-PRC-01-F- Compressed Air Systems	☐	☐
	☐ NRCA-PRC-02-F- Kitchen Exhaust	☐	☐
	☐ NRCA-PRC-03-F- Garage Exhaust	☐	☐
	☐ NRCA-PRC-04-F- Refrigerated Warehouse- Evaporator Fan Motor Controls	☐	☐
	☐ NRCA-PRC-05-F- Refrigerated Warehouse- Evaporative Condenser Controls	☐	☐
	☐ NRCA-PRC-06-F- Refrigerated Warehouse- Air Cooled Condenser Controls	☐	☐
	☐ NRCA-PRC-07F- Refrigerated Warehouse- Variable Speed Compressor	☐	☐
	☐ NRCA-PRC-08-F- Electrical Resistance Underslab Heating System	☐	☐

I. ENVELOPE GENERAL INFORMATION (See NRCC-PRF-ENV-DETAILS for more information)

1.	Total Conditioned Floor Area	29,182 ft²	**5.**	Number of Floors Above Grade	2
2.	Total Unconditioned Floor Area	0 ft²	**6.**	Number of Floors Below Grade	0
3.	Addition Conditioned Floor Area	0 ft²			
4.	Addition Unconditioned Floor Area	0 ft²			

7. Opaque Surfaces & Orientation	8. Total Gross Surface Area	9. Total Fenestration Area	10. Window to Wall Ratio	Confirmed: Pass	Confirmed: Fail
North Wall	6,600 ft²	2,646 ft²	40.1%	☐	☐
East Wall	3,475 ft²	669 ft²	19.3%	☐	☐
South Wall	5,715 ft²	2,398 ft²	42.0%	☐	☐
West Wall	3,075 ft²	876 ft²	28.5%	☐	☐
Total	**18,865 ft²**	**6,589 ft²**	**34.9%**	☐	☐
Roof	14,999 ft²	140 ft²	00.9%	☐	☐

Project Name:	Instructional Building 2 Compton College	NRCC-PRF-01-E	Page 8 of 24
Project Address:	1111 E Artesia Blvd Compton 90221	Calculation Date/Time:	11:07, Mon, Nov 19, 2018
Compliance Scope:	NewComplete	Input File Name:	COMPTON EPRO_v7_T24.cibd16x

J. FENESTRATION ASSEMBLY SUMMARY **§ 110.6**

1. Fenestration Assembly Name / Tag or I.D.	2. Fenestration Type / Product Type / Frame Type	3. Certification Method[1]	4. Assembly Method	5. Area ft²	6. Overall U-factor	7. Overall SHGC	8. Overall VT	9. Status[2]	Confirmed: Pass	Confirmed: Fail
PPG SOLARBAN 70 XL Clear	VerticalFenestration CurtainWall N/A	NFRC Rated	SiteBuilt	6589	0.47	0.33	0.63	N	☐	☐
Sunopticx Prismatic Skylight	Skylight FixedWindow N/A	NFRC Rated	SiteBuilt	140	0.42	0.53	0.61	N	☐	☐

[1] Newly installed fenestration shall have a certified NFRC Label Certificate or use the CEC default tables found in Table 110.6-A and Table 110.6-B. Center of Glass (COG) values are for the glass-only, determined by the manufacturer, and are shown for ease of verification. Site-built fenestration values are calculated per Nonresidential Appendix NA6 and are used in the analysis.

[2] Status: N - New, A – Altered, E – Existing

Taking compliance credit for fenestration shading devices? (if "Yes", see NRCC-PRF-ENV-DETAILS for more information)	No

K. OPAQUE SURFACE ASSEMBLY SUMMARY **§ 120.7/ § 140.3**

1. Surface Name	2. Surface Type	3. Area (ft²)	4. Framing Type	5. Cavity R-Value	6. Continuous R-Value	7. U-Factor / F-Factor / C-Factor	8. Status[1]	Confirmed: Pass	Confirmed: Fail
R8 Rigid o R-19 Metal Fra7	ExteriorWall	18865	Metal	19	8	U-Factor: 0.074	N	☐	☐
R-19 Demising Wall12	InteriorWall	29182	Metal	19	NA	U-Factor: 0.167	N	☐	☐
Slab On Grade14	UndergroundFloor	15713	NA	0	NA	F-Factor: 0.730	N	☐	☐
Int Ceiling16	Ceiling	15713	NA	0	NA	U-Factor: 0.360	N	☐	☐
R-30 Rigid - CRRC++166	Roof	13849	NA	0	30	U-Factor: 0.030	N	☐	☐
R-30 Roof Attic174	Roof	1150	Wood	30	NA	U-Factor: 0.038	N	☐	☐
Int Floor176	InteriorFloor	13469	NA	0	NA	U-Factor: 0.238	N	☐	☐

[1] Status: N - New, A – Altered, E – Existing

Project Name:	Instructional Building 2 Compton College	NRCC-PRF-01-E	Page 9 of 24
Project Address:	1111 E Artesia Blvd Compton 90221	Calculation Date/Time:	11:07, Mon, Nov 19, 2018
Compliance Scope:	NewComplete	Input File Name:	COMPTON EPRO_v7_T24.cibd16x

L. ROOFING PRODUCT SUMMARY **§ 140.3**

1. Product Type	2. Product Density (lb/ft²)	3. Aged Solar Reflectance	4. Thermal Emittance	5. SRI	6. Cool Roof Credit	7. Roofing Product Description	Confirmed: Pass	Confirmed: Fail
R-30 Rigid - CRRC++166	50.499	0.75	0.85	Not Provided	Yes	CRRC Prod. ID: R-30 Rigid - CRRC++	☐	☐
R-30 Roof Attic174	5.813	0.08	0.75	NA	No	NA	☐	☐

M. HVAC SYSTEM SUMMARY (see NRCC-PRF-MCH-DETAILS for more information) **§ 110.1 / § 110.2**

Dry System Equipment [1] (Fan & Economizer info included below in Table N)

1. Equip Name	2. Equip Type	3. System Type (Simple [2] or Complex [3])	4. Qty	5. Total Heating Output (kBtu/h)	6. Supp Heat Source (Y/N)	7. Supp Heat Output (kBtuh)	8. Total Cooling Output (kBtu/h)	9. Efficiency: Cooling	9. Efficiency: Heating	10. Acceptance Testing Required? (Y/N) [4]	11. Status[5]	Confirmed: Pass	Confirmed: Fail
AHU-1	VAV (Packaged3Phase)	Complex	1	1750	No	0	1562	NA	NA	Yes	N	☐	☐

[1] Dry System Equipment includes furnaces, air handling units, heat pumps, etc.

[2] Simple Systems must complete NRCC-CXR-03-E commissioning design review form

[3] Complex Systems must complete NRCC-CXR-04-E commissioning design review form

[4] A summary of which acceptance tests are applicable is provided in NRCC-PRF-MCH-DETAILS

[5] Status: N - New, A – Altered, E – Existing

Wet System Equipment [1]								*Pumps*					Confirmed	
12. Equip Name	**13. Equip Type**	**14. Qty**	**15. Vol (gal)**	**16. Rated Capacity (kBtu/h)**	**17. Efficiency**	**18. Standby Loss**	**19. Tank Ext. R Value**	**20. Qty**	**21. GPM**	**22. HP**	**23. VSD (Y/N)**	**24. Status[2]**	**Pass**	**Fail**
Lochinvar PBN 17012-0	HotWater	NA	NA	1428	Thrml. Eff: 0.84	NA	NA	1	100.0	1.000	Yes	N	☐	☐
Lochinvar CLN 1203	Storage	1	81.00	120	Thrml. Eff.: 0.80	SBLF: 0.001	NA		NA		No	N	☐	☐
Tower	OpenTower	NA	NA	1344	NA	NA	NA	1	336.0	0.100	No	N	☐	☐
CC INSTRUCT BLDG #21 - ChillSys	Chilled Water, Primary/Secondary	NA	NA	NA	NA	NA	NA	1	270.0	3.500	Yes	N	☐	☐

IDENTIFICATION STAMP
DIV. OF THE STATE ARCHITECT
APP. 03-119458 INC:
REVIEWED FOR
SS ☑ FLS ☑ ACS ☑
DATE: 05/23/2019

DIVISION OF THE STATE ARCHITECT
355 South Grand Avenue, Suite 2100
Los Angeles, CA 90012
ph: (213) 897-3995 fx:(213) 897-3159

agency

tBP architecture planning interiors

tBP/Architecture
4611 Teller Avenue
Newport Beach, CA 92660
ph: 949.673.0300 fx: 949.732.3895

architect

CAPITAL ENGINEERING CONSULTANTS, INC.
LONG BEACH, CALIFORNIA
CM - RH/SL/TS 171221.00
PM - DESIGN TEAM PROJECT NO.

REGISTERED PROFESSIONAL ENGINEER CHRISTOPHER V. MERCURIO M 34011 EXPIRES 3/30/20 MECHANICAL STATE OF CALIFORNIA

DATE SIGNED: 04/05/19

consultant

COMPTON COLLEGE
INSTRUCTIONAL BUILDING No.2

COMPTON COMMUNITY COLLEGE DISTRICT
1111 E. ARTESIA BLVD. COMPTON, CA.

owner

tBP project number: 20998.00
file name:
drawn by: checked by:
date: 11 / 20 / 2018
rev: date: description:

THIS DRAWING AND THE DESIGNS, DEPICTIONS, IDEAS AND OTHER INFORMATION CONTAINED HEREIN CONSTITUTE UNPUBLISHED WORK OF tBP/ARCHITECTURE AND SHALL REMAIN PROPERTY OF tBP/ARCHITECTURE IN PERPETUITY. NO PART THEREOF SHALL BE REPRODUCED, DISCLOSED, DISTRIBUTED, SOLD, PUBLISHED OR OTHERWISE USED IN ANY WAY WITHOUT THE ADVANCED EXPRESS WRITTEN CONSENT OF tBP/ARCHITECTURE.

drawing title:
TITLE 24 COMPLIANCE

drawing no.
M0-3

drawing of

4/8/2019 5:58:46 PM

Project Name:	Instructional Building 2 Compton College	NRCC-PRF-01-E	Page 10 of 24
Project Address:	1111 E Artesia Blvd Compton 90221	Calculation Date/Time:	11:07, Mon, Nov 19, 2018
Compliance Scope:	NewComplete	Input File Name:	COMPTON EPRO_v7_T24.cibd16x

Wet System Equipment [1]								*Pumps*					Confirmed	
12.	13.	14.	15.	16.	17.	18.	19.	20.	21.	22.	23.	24.		
Equip Name	Equip Type	Qty	Vol (gal)	Rated Capacity (kBtu/h)	Efficiency	Standby Loss	Tank Ext. R Value	Qty	GPM	HP	VSD (Y/N)	Status[2]	Pass	Fail
CC INSTRUCT BLDG #21 - ChillSys2SSeg														
T-24 Min Plan-1-1-1	Centrifugal	NA	NA	1380	kW/ton: 0.610	NA	NA	1	270.0	2.500	No	N	☐	☐

[1] *Wet System Equipment includes boilers, chillers, cooling towers, water heaters, etc.*
[2] *Status: N - New, A – Altered, E – Existing*

Discrepancy between modeled and designed equipment sizing? (if "Yes", see Table F. "Additional Remarks" for an explanation)	No

N. ECONOMIZER & FAN SYSTEMS SUMMARY[1]													§ 140.4	Confirmed	
1.	2.	3.					4.					5.			
Equip Name	Outside Air	Supply Fan					Return Fan					Economizer Type (if present)		Pass	Fail
	CFM	CFM	HP	BHP	TSP (inch WC)	Control	CFM	HP	BHP	TSP (inch WC)	Control				
AHU-1	9901	42000	56.100	56.100	5.26	VariableSpeedDrive	37000	23.400	23.400	2.41	VariableSpeedDrive	DifferentialDryBulb		☐	☐

[1] *Mechanical ventilation calculations and exhaust fans are included in the NRCC-PRF-MCH-DETAILS section*

O. EQUIPMENT CONTROLS		§ 120.2	Confirmed	
1.	2.	3.	Pass	Fail
Equip Name	Equip Type	Controls		
AHU-1	VAV	1 Zones With CO2Sensor Vent. Control, DDC Controls and Dual Maximum Reheat Controls Differential Drybulb Economizer Warmest Zone Supply Air Temp. Reset Optimum Start No Evaporative Cooler No Heat Recovery	☐	☐
CC INSTRUCT BLDG #21 - HotWater	Heating Hot Water, Primary Only	Outside Air Reset Temperature Control, DDC No Heat Recovery	☐	☐

Project Name:	Instructional Building 2 Compton College	NRCC-PRF-01-E	Page 11 of 24
Project Address:	1111 E Artesia Blvd Compton 90221	Calculation Date/Time:	11:07, Mon, Nov 19, 2018
Compliance Scope:	NewComplete	Input File Name:	COMPTON EPRO_v7_T24.cibd16x

O. EQUIPMENT CONTROLS		§ 120.2	Confirmed	
1.	2.	3.	Pass	Fail
Equip Name	Equip Type	Controls		
CC INSTRUCT BLDG #21 - SHW	Service Hot Water, Primary Only	Fixed Temperature Control, No DDC No Heat Recovery	☐	☐
CC INSTRUCT BLDG #21 - CW	Condenser Water, Primary Only	Fixed Temperature Control, DDC No Heat Recovery	☐	☐
CC INSTRUCT BLDG #21 - ChillSys	Chilled Water, Primary/Secondary	Outside Air Reset Temperature Control, DDC No Heat Recovery	☐	☐

P. SYSTEM DISTRIBUTION SUMMARY				§ 120.4/ § 140.4(l)				
		Dry System Distribution					Confirmed	
1.	2.	3.	4.	5.		6.	Pass	Fail
Equip Name	Equip Type	Duct Leakage and Sealing Required per 140.4(l)	Duct Leakage will be verified per NA1 and NA2	Ducts		Status[1]		
				Insulation R-Value	Location			
AHU-1	VAV	No	No	8.0	Unconditioned	N	☐	☐

[1] *Status: N - New, E – Existing*

Does the Project Include Zonal Systems? (if "Yes", see NRCC-PRF-MCH-DETAILS for system information)	No
Does the Project Include a Solar Hot Water System? (if "Yes", see NRCC-PRF-MCH-DETAILS for system information)	No
Multifamily or Hotel/ Motel Occupancy? (if "Yes", see NRCC-PRF-MCH-DETAILS for DHW system information)	No

Q. INDOOR CONDITIONED LIGHTING GENERAL INFO (see NRCC-PRF-LTI-DETAILS for more info)[3]						§ 140.6	
						Confirmed	
1.	2.	3.	4.	5.		Pass	Fail
Occupancy Type [1]	Conditioned Floor Area [2] (ft^2)	Installed Lighting Power (Watts)	Lighting Control Credits (Watts)	Additional (Custom) Allowance			
				Area Category Footnotes (Watts)	Tailored Method (Watts)	☐	☐
Classrooms, Lecture, Training, Vocational Areas	22,838	18,271	0	0	0	☐	☐

Project Name:	Instructional Building 2 Compton College	NRCC-PRF-01-E	Page 12 of 24
Project Address:	1111 E Artesia Blvd Compton 90221	Calculation Date/Time:	11:07, Mon, Nov 19, 2018
Compliance Scope:	NewComplete	Input File Name:	COMPTON EPRO_v7_T24.cibd16x

Q. INDOOR CONDITIONED LIGHTING GENERAL INFO (see NRCC-PRF-LTI-DETAILS for more info)[3]						§ 140.6	
						Confirmed	
1.	2.	3.	4.	5.		Pass	Fail
Occupancy Type [1]	Conditioned Floor Area [2] (ft^2)	Installed Lighting Power (Watts)	Lighting Control Credits (Watts)	Additional (Custom) Allowance			
				Area Category Footnotes (Watts)	Tailored Method (Watts)	☐	☐
Corridors, Restrooms, Stairs, and Support Areas	3,426	2,741	0	0	0	☐	☐
Convention, Conference, Multipurpose and Meeting Center Areas	1,100	880	0	0	0	☐	☐
Electrical, Mechanical, Telephone Rooms	226	181	0	0	0	☐	☐
Office (250 square feet in floor area or less)	1,092	874	0	0	0	☐	☐
Office (Greater than 250 square feet in floor area)	500	400	0	0	0	☐	☐
Building Totals:	**29,182**	**23,347**	**0**	**0**	**0**		

[1] *See Table 140.6-C*
[2] *See NRCC-LTI-01-E for unconditioned spaces*
[3] *Lighting information for existing spaces modeled is not included in the table*

R. INDOOR CONDITIONED LIGHTING SCHEDULE (Adapted from NRCC-LTI-01-E)[1]	§ 130.0
This Section Does Not Apply	

[1] *If lighting power densities were used in the compliance model Building Departments will need to check prescriptive forms for Luminaire Schedule details.*

S1. COVERED PROCESS SUMMARY – ENCLOSED PARKING GARAGES	§ 140.9
This Section Does Not Apply	

S2. COVERED PROCESS SUMMARY – COMMERCIAL KITCHENS	§ 140.9
This Section Does Not Apply	

Project Name:	Instructional Building 2 Compton College	NRCC-PRF-01-E	Page 13 of 24
Project Address:	1111 E Artesia Blvd Compton 90221	Calculation Date/Time:	11:07, Mon, Nov 19, 2018
Compliance Scope:	NewComplete	Input File Name:	COMPTON EPRO_v7_T24.cibd16x

S3. COVERED PROCESS SUMMARY – COMPUTER ROOMS	§ 140.9
This Section Does Not Apply	

S4. COVERED PROCESS SUMMARY – LABORATORY EXHAUSTS	§ 140.9
This Section Does Not Apply	

T. UNMET LOAD HOURS

Thermal Zone Name	Cooling Unmet Load Hour Limit for Thermal Zone	Proposed Cooling Unmet Load Hours	Heating Unmet Load Hour Limit for Thermal Zone	Proposed Heating Unmet Load Hours
26-Zone 2-9	150	483.5	150	0

U. ENERGY USE SUMMARY

Energy Component	Standard Design Site (MWh)	Proposed Design Site (MWh)	Margin (MWh)	Standard Design Site (MBtu)	Proposed Design Site (MBtu)	Margin (MBtu)
Space Heating	0.0	--	--	162.3	421.6	-259.3
Space Cooling	55.2	29.8	25.4	--	--	--
Indoor Fans	25.3	48.2	-22.9	--	--	--
Heat Rejection	--	0.1	--	--	--	--
Pumps & Misc.	2.1	18.2	-16.1	--	--	--
Domestic Hot Water	--	--	--	160.8	152.2	8.6
Indoor Lighting	66.2	47.7	18.5	--	--	--
COMPLIANCE TOTAL	**148.8**	**144.0**	**4.8**	**323.1**	**573.8**	**-250.7**
Receptacle	73.3	73.3	0.0	--	--	--
Process	9.1	9.1	0.0	--	--	--
Other Ltg	--	--	--	--	--	--
Process Motors	--	--	--	--	--	--
TOTAL	**231.2**	**226.4**	**4.8**	**323.1**	**573.8**	**-250.7**

Project Name:	Instructional Building 2 Compton College	NRCC-PRF-01-E	Page 14 of 24
Project Address:	1111 E Artesia Blvd Compton 90221	Calculation Date/Time:	11:07, Mon, Nov 19, 2018
Compliance Scope:	NewComplete	Input File Name:	COMPTON EPRO_v7_T24.cibd16x

DOCUMENTATION AUTHOR'S DECLARATION STATEMENT	§ 10-103
I certify that this Certificate of Compliance documentation is accurate and complete.	
Documentation Author Name: Aaron Wintersmith	Signature:
Company: Capital Engineering Consultants Inc.	
Address: 11020 Sun Center Dr	Signature Date: 04/08/2019
City/State/Zip: Rancho Cordova CA 95670	CEA Identification (If applicable):
Phone: 916-851-3500	

RESPONSIBLE PERSON'S DECLARATION STATEMENT

I certify the following under penalty of perjury, under the laws of the State of California:

1	I hereby affirm that I am eligible under the provisions of Division 3 of the Business and Professions Code to sign this document as the person responsible for its preparation; and that I am licensed in the State of California as a civil engineer, mechanical engineer, electrical engineer, or I am a licensed architect.
2	I affirm that I am eligible under the provisions of Division 3 of the Business and Professions Code by section 5537.2 or 6737.3 to sign this document as the person responsible for its preparation; and that I am a licensed contractor performing this work.
3	I affirm that I am eligible under Division 3 of the Business and Professions Code to sign this document because it pertains to a structure or type of work described as exempt pursuant to Business and Professions Code Sections 5537, 5538 and 6737.1.

Responsible Envelope Designer Name:	**Signature:**	
Company: tBP Architecture		
Address: 4611 Teller Ave	Date Signed:	
City/State/Zip: Newport Beach CA 92660	Declaration Statement Type:	
Phone: 949-673-0300	Title:	License #:
Responsible Lighting Designer Name:	**Signature:** See E Sheets	
Company: SEE E SHEETS FOR		
Address: DETAILED COMPLIANCE FORMS	Date Signed:	
City/State/Zip:	Declaration Statement Type:	
Phone:	Title:	License #:
Responsible Mechanical Designer Name: Christopher Mercurio	**Signature:**	
Company: Capital Engineering		
Address: 2830 Temple Ave	Date Signed: 04/08/2019	
City/State/Zip: Long Beach CA 90806	Declaration Statement Type:	
Phone: 310-328-3955	Title:	License #: M34011

Project Name:	Instructional Building 2 Compton College	NRCC-PRF-01-E	Page 15 of 24
Project Address:	1111 E Artesia Blvd Compton 90221	Calculation Date/Time:	11:07, Mon, Nov 19, 2018
Compliance Scope:	NewComplete	Input File Name:	COMPTON EPRO_v7_T24.cibd16x

NRCC-PRF-ENV-DETAILS -SECTION START-

A. OPAQUE SURFACE ASSEMBLY DETAILS				Confirmed	
1.	2.	3.	4.	Pass	Fail
Surface Name	Surface Type	Description of Assembly Layers	Notes		
R8 Rigid o R-19 Metal Fra7	ExteriorWall	Stucco - 7/8 in. Compliance Insulation R8.00 Vapor permeable felt - 1/8 in. Metal framed wall, 16in. OC, 5.5in., R-19 Gypsum Board - 1/2 in.		☐	☐
R-19 Demising Wall12	InteriorWall	Stucco - 7/8 in. Vapor permeable felt - 1/8 in. Metal framed wall, 16in. OC, 5.5in., R-19 Gypsum Board - 1/2 in.		☐	☐
Slab On Grade14	UndergroundFloor	Slab Type = UnheatedSlabOnGrade Insulation Orientation = None Insulation R-Value = R0		☐	☐
Int Ceiling16	Ceiling	Concrete - 140 lb/ft3 - 4 in. Acoustic Tile - 3/8 in.		☐	☐
R-30 Rigid - CRRC++166	Roof	Built-up roofing - 3/8 in. Compliance Insulation R30.00 Plywood - 1/2 in. Air - Cavity - Wall Roof Ceiling - 4 in. or more Concrete - 140 lb/ft3 - 4 in.		☐	☐
R-30 Roof Attic174	Roof	Asphalt shingles - 1/4 in. Vapor permeable felt - 1/8 in. Plywood - 1/2 in. Air - Cavity - Wall Roof Ceiling - 4 in. or more Wood framed roof, 24in. OC, 3.5in., R-30 Gypsum Board - 1/2 in.		☐	☐
Int Floor176	InteriorFloor	Concrete - 140 lb/ft3 - 4 in. Carpet - 3/4 in.		☐	☐

B. OVERHANG DETAILS (Adapted from NRCC-ENV-02-E)
This Section Does Not Apply

Project Name:	Instructional Building 2 Compton College	NRCC-PRF-01-E	Page 16 of 24
Project Address:	1111 E Artesia Blvd Compton 90221	Calculation Date/Time:	11:07, Mon, Nov 19, 2018
Compliance Scope:	NewComplete	Input File Name:	COMPTON EPRO_v7_T24.cibd16x

C. OPAQUE DOOR SUMMARY
This Section Does Not Apply

NRCC-PRF-MCH-DETAILS -SECTION START-

A. MECHANICAL VENTILATION AND REHEAT ***(Adapted from 2016-NRCC-MCH-03-E)***

CONDITIONED ZONE NAME	HEATING/COOLING SYSTEM ID	DESIGN PRIMARY AIR FLOW (CFM)	DESIGN PRIMARY MINIMUM AIR FLOW (CFM)	MINIMUM PRIMARY AIR FLOW FRACTION	MAXIMUM HEATING AIR FLOW (CFM)	MAXIMUM HEATING AIR FLOW FRACTION	DDC CONTROL (Y/N)	VENT SYSTEM ID	CONDITIONED AREA (ft2)	MIN. VENT PER AREA (CFM/ft2)	DESIGN NUM. OF PEOPLE	MIN. VENT PER PERSON (CFM/person)	REQ'D VENT AIR FLOW (CFM)	DESIGN VENT AIR FLOW (CFM)	TRANSFER AIRFLOW (CFM)	DCV (Y/N)	Operable Window Interlock § 140.4(n) (Y/N)	Pass	Fail
1-Zone 1-1	AHU-1	1,600	432	0.27	800	1	Y	AHU-1	1,065	NA	26.62	15.00	399	399	NA	N	NA	☐	☐
2-Zone 1-2	AHU-1	750	225	0.30	375	1	Y	AHU-1	537	NA	13.43	15.00	201	201	NA	N	NA	☐	☐
3-Zone 1-3	AHU-1	1,460	394	0.27	715		Y	AHU-1	1,000	NA	25.00	15.00	375	375	NA	N	NA	☐	☐
4-Zone 1-4	AHU-1	1,600	432	0.27	800	1	Y	AHU-1	1,070	NA	26.75	15.00	401	401	NA	N	NA	☐	☐
5-Zone 1-5	AHU-1	800	160	0.20	400	1	Y	AHU-1	226	NA	5.65	15.00	85	85	NA	N	NA	☐	☐
6-Zone 1-6	AHU-1	600	366	0.61	365	1	Y	AHU-1	957	NA	23.93	15.00	359	359	NA	N	NA	☐	☐
7-Zone 1-7	AHU-1	240	146	0.61	135	1	Y	AHU-1	350	NA	8.75	15.00	131	131	NA	N	NA	☐	☐
8-Zone 1-8	AHU-1	460	207	0.45	330	1	Y	AHU-1	498	NA	12.45	15.00	187	187	NA	N	NA	☐	☐
9-Zone 1-9	AHU-1	900	243	0.27	450	1	Y	AHU-1	600	NA	15.00	15.00	225	225	NA	N	NA	☐	☐
10-Zone 1-10	AHU-1	1,600	432	0.27	800	1	Y	AHU-1	1,065	NA	26.62	15.00	399	399	NA	N	NA	☐	☐
11-Zone 1-11	AHU-1	1,000	300	0.30	500	1	Y	AHU-1	715	NA	17.88	15.00	268	268	NA	N	NA	☐	☐
12-Zone 1-12	AHU-1	1,600	432	0.27	800	1	Y	AHU-1	1,100	NA	27.50	15.00	413	413	NA	N	NA	☐	☐
13-Zone 1-13	AHU-1	1,680	454	0.27	840	1	Y	AHU-1	1,150	NA	28.75	15.00	431	431	NA	N	NA	☐	☐
14-Zone 1-14	AHU-1	1,680	454	0.27	840	1	Y	AHU-1	1,150	NA	28.75	15.00	431	431	NA	N	NA	☐	☐
15-Zone 1-15	AHU-1	1,680	454	0.27	840	1	Y	AHU-1	1,150	NA	28.75	15.00	431	431	NA	N	NA	☐	☐

Column groups: 1. DESIGN AIR FLOWS (Heating/Cooling System ID through DDC Control); 2. VENTILATION (§ 120.1) (Vent System ID through Operable Window Interlock); Confirmed (Pass, Fail).

Project Name:	Instructional Building 2 Compton College	NRCC-PRF-01-E	Page 17 of 24
Project Address:	1111 E Artesia Blvd Compton 90221	Calculation Date/Time:	11:07, Mon, Nov 19, 2018
Compliance Scope:	NewComplete	Input File Name:	COMPTON EPRO_v7_T24.cibd16x

A. MECHANICAL VENTILATION AND REHEAT ***(Adapted from 2016-NRCC-MCH-03-E)***

CONDITIONED ZONE NAME	HEATING/COOLING SYSTEM ID	DESIGN PRIMARY AIR FLOW (CFM)	DESIGN PRIMARY MINIMUM AIR FLOW (CFM)	MINIMUM PRIMARY AIR FLOW FRACTION	MAXIMUM HEATING AIR FLOW (CFM)	MAXIMUM HEATING AIR FLOW FRACTION	DDC CONTROL (Y/N)	VENT SYSTEM ID	CONDITIONED AREA (ft2)	MIN. VENT PER AREA (CFM/ft2)	DESIGN NUM. OF PEOPLE	MIN. VENT PER PERSON (CFM/person)	REQ'D VENT AIR FLOW (CFM)	DESIGN VENT AIR FLOW (CFM)	TRANSFER AIRFLOW (CFM)	DCV (Y/N)	Operable Window Interlock § 140.4(n) (Y/N)	Pass	Fail
16-Zone 1-17	AHU-1	1,600	592	0.37	800	1	Y	AHU-1	1,550	NA	38.75	15.00	581	581	NA	N	NA	☐	☐
17-Zone 1-16	AHU-1	1,200	600	0.50	600	1	Y	AHU-1	1,530	NA	7.65	30.00	230	230	NA	N	NA	☐	☐
18-Zone 2-1	AHU-1	1,740	470	0.27	800		Y	AHU-1	1,150	NA	28.75	15.00	431	431	NA	N	NA	☐	☐
19-Zone 2-2	AHU-1	1,740	470	0.27	800		Y	AHU-1	1,150	NA	28.75	15.00	431	431	NA	N	NA	☐	☐
20-Zone 2-3	AHU-1	1,620	599	0.37	800		Y	AHU-1	1,100	NA	36.67	15.00	550	550	NA	Y	NA	☐	☐
21-Zone 2-4	AHU-1	875	175	0.20	425		Y	AHU-1	226	NA	0.34	100.00	34	34	NA	N	NA	☐	☐
22-Zone 2-5	AHU-1	480	144	0.30	240	1	Y	AHU-1	929	NA	4.64	30.00	139	139	NA	N	NA	☐	☐
23-Zone 2-6	AHU-1	220	81	0.37	110	1	Y	AHU-1	457	NA	2.29	30.00	69	69	NA	N	NA	☐	☐
24-Zone 2-7	AHU-1	350	95	0.27	175	1	Y	AHU-1	240	NA	1.20	30.00	36	36	NA	N	NA	☐	☐
25-Zone 2-8	AHU-1	350	70	0.20	175	1	Y	AHU-1	360	NA	1.80	30.00	54	54	NA	N	NA	☐	☐
26-Zone 2-9	AHU-1	350	77	0.22	175	1	Y	AHU-1	500	NA	2.50	30.00	75	75	NA	N	NA	☐	☐
27-Zone 2-10	AHU-1	800	160	0.20	400	1	Y	AHU-1	492	NA	2.46	30.00	74	74	NA	N	NA	☐	☐
28-Zone 2-11	AHU-1	1,000	300	0.30	500	1	Y	AHU-1	715	NA	17.88	15.00	268	268	NA	N	NA	☐	☐
29-Zone 2-12	AHU-1	1,500	405	0.27	750	1	Y	AHU-1	1,000	NA	25.00	15.00	375	375	NA	N	NA	☐	☐
30-Zone 2-13	AHU-1	1,700	459	0.27	750		Y	AHU-1	1,150	NA	28.75	15.00	431	431	NA	N	NA	☐	☐
31-Zone 2-14	AHU-1	1,700	459	0.27	750		Y	AHU-1	1,150	NA	28.75	15.00	431	431	NA	N	NA	☐	☐
32-Zone 2-15	AHU-1	1,700	476	0.28	800		Y	AHU-1	1,150	NA	28.75	15.00	431	431	NA	N	NA	☐	☐
33-Zone 2-16	AHU-1	1,200	456	0.38	600	1	Y	AHU-1	1,190	NA	29.75	15.00	446	446	NA	N	NA	☐	☐
34-Zone 2-17	AHU-1	350	105	0.30	175	1	Y	AHU-1	510	NA	2.55	30.00	77	77	NA	N	NA	☐	☐

Project Name:	Instructional Building 2 Compton College	NRCC-PRF-01-E	Page 18 of 24
Project Address:	1111 E Artesia Blvd Compton 90221	Calculation Date/Time:	11:07, Mon, Nov 19, 2018
Compliance Scope:	NewComplete	Input File Name:	COMPTON EPRO_v7_T24.cibd16x

A. MECHANICAL VENTILATION AND REHEAT ***(Adapted from 2016-NRCC-MCH-03-E)***

CONDITIONED ZONE NAME	HEATING/COOLING SYSTEM ID	DESIGN PRIMARY AIR FLOW (CFM)	DESIGN PRIMARY MINIMUM AIR FLOW (CFM)	MINIMUM PRIMARY AIR FLOW FRACTION	MAXIMUM HEATING AIR FLOW (CFM)	MAXIMUM HEATING AIR FLOW FRACTION	DDC CONTROL (Y/N)	VENT SYSTEM ID	CONDITIONED AREA (ft2)	MIN. VENT PER AREA (CFM/ft2)	DESIGN NUM. OF PEOPLE	MIN. VENT PER PERSON (CFM/person)	REQ'D VENT AIR FLOW (CFM)	DESIGN VENT AIR FLOW (CFM)	TRANSFER AIRFLOW (CFM)	DCV (Y/N)	Operable Window Interlock § 140.4(n) (Y/N)	Pass	Fail
								TOTAL	29,182		633.06		9,899	9,899	NA			☐	☐

B. ZONAL SYSTEM AND TERMINAL UNIT SUMMARY														§ 140.4	
1.	2.	3.	4.		5.	6.	7.			8.				Confirmed	
System ID	System Type	Qty	Rated Capacity (kBtuh)		Economizer	Zone Name	Airflow (cfm)			Fan				Pass	Fail
			Heating	Cooling			Design	Min.	Min. Ratio	BHP	Cycles	ECM Motor			
34-Zone 2-17-Trm	VAVReheatBox	1	25.00	NA	NA	34-Zone 2-17	350	105	0.30	NA	NA	☐		☐	☐
33-Zone 2-16-Trm	VAVReheatBox	1	25.00	NA	NA	33-Zone 2-16	1200	456	0.38	NA	NA	☐		☐	☐
32-Zone 2-15-Trm	VAVReheatBox	1	25.00	NA	NA	32-Zone 2-15	1700	476	0.28	NA	NA	☐		☐	☐
31-Zone 2-14-Trm	VAVReheatBox	1	25.00	NA	NA	31-Zone 2-14	1700	459	0.27	NA	NA	☐		☐	☐
30-Zone 2-13-Trm	VAVReheatBox	1	25.00	NA	NA	30-Zone 2-13	1700	459	0.27	NA	NA	☐		☐	☐
29-Zone 2-12-Trm	VAVReheatBox	1	25.00	NA	NA	29-Zone 2-12	1500	405	0.27	NA	NA	☐		☐	☐
28-Zone 2-11-Trm	VAVReheatBox	1	25.00	NA	NA	28-Zone 2-11	1000	300	0.30	NA	NA	☐		☐	☐
27-Zone 2-10-Trm	VAVReheatBox	1	25.00	NA	NA	27-Zone 2-10	800	160	0.20	NA	NA	☐		☐	☐
26-Zone 2-9-Trm	VAVReheatBox	1	25.00	NA	NA	26-Zone 2-9	350	77	0.22	NA	NA	☐		☐	☐
25-Zone 2-8-Trm	VAVReheatBox	1	25.00	NA	NA	25-Zone 2-8	350	70	0.20	NA	NA	☐		☐	☐
24-Zone 2-7-Trm	VAVReheatBox	1	25.00	NA	NA	24-Zone 2-7	350	95	0.27	NA	NA	☐		☐	☐
23-Zone 2-6-Trm	VAVReheatBox	1	25.00	NA	NA	23-Zone 2-6	220	81	0.37	NA	NA	☐		☐	☐

IDENTIFICATION STAMP
DIV. OF THE STATE ARCHITECT
APP. 03-119458 INC:
REVIEWED FOR
SS ☑ FLS ☑ ACS ☑
DATE:05/23/2019

DIVISION OF THE STATE ARCHITECT
355 South Grand Avenue, Suite 2100
Los Angeles, CA 90012
ph: (213) 897-3995 fx:(213) 897-3159
agency

tBP architecture planning interiors
tBP/Architecture
4611 Teller Avenue
Newport Beach, CA 92660
ph: 949.673.0300 fx: 949.732.3895
architect

CAPITAL ENGINEERING CONSULTANTS, INC.
LONG BEACH, CALIFORNIA
CM - RH/SL/TS 171221.00
PM - DESIGN TEAM PROJECT NO.

REGISTERED PROFESSIONAL ENGINEER CHRISTOPHER V. MERCURIO M 34011 EXPIRES 3/30/20 MECHANICAL STATE OF CALIFORNIA
DATE SIGNED: 04/05/19
consultant

COMPTON COLLEGE
INSTRUCTIONAL BUILDING No.2
COMPTON COMMUNITY COLLEGE DISTRICT
1111 E. ARTESIA BLVD. COMPTON, CA.
owner

tBP project number: 20998.00
file name:
drawn by: checked by:
date: 11 / 20 / 2018
rev: date: description:

THIS DRAWING AND THE DESIGNS, DEPICTIONS, IDEAS AND OTHER INFORMATION CONTAINED HEREIN CONSTITUTE UNPUBLISHED WORK OF tBP/ARCHITECTURE AND SHALL REMAIN PROPERTY OF tBP/ARCHITECTURE IN PERPETUITY. NO PART THEREOF SHALL BE REPRODUCED, DISCLOSED, DISTRIBUTED, SOLD, PUBLISHED OR OTHERWISE USED IN ANY WAY WITHOUT THE ADVANCED EXPRESS WRITTEN CONSENT OF tBP/ARCHITECTURE.

drawing title:
TITLE 24 COMPLIANCE

drawing no.
M0-4
drawing of

4/8/2019 5:58:48 PM

Project Name:	Instructional Building 2 Compton College	NRCC-PRF-01-E	Page 19 of 24
Project Address:	1111 E Artesia Blvd Compton 90221	Calculation Date/Time:	11:07, Mon, Nov 19, 2018
Compliance Scope:	NewComplete	Input File Name:	COMPTON EPRO_v7_T24.cibd16x

B. ZONAL SYSTEM AND TERMINAL UNIT SUMMARY — § 140.4

1. System ID	2. System Type	3. Qty	4. Rated Capacity (kBtuh) Heating	Cooling	5. Economizer	6. Zone Name	7. Airflow (cfm) Design	Min.	Min. Ratio	8. Fan BHP	Cycles	ECM Motor	Confirmed Pass	Fail
22-Zone 2-5-Trm	VAVReheatBox	1	25.00	NA	NA	22-Zone 2-5	480	144	0.30	NA	NA	☐	☐	☐
21-Zone 2-4-Trm	VAVReheatBox	1	25.00	NA	NA	21-Zone 2-4	875	175	0.20	NA	NA	☐	☐	☐
20-Zone 2-3-Trm	VAVReheatBox	1	25.00	NA	NA	20-Zone 2-3	1620	599	0.37	NA	NA	☐	☐	☐
19-Zone 2-2-Trm	VAVReheatBox	1	25.00	NA	NA	19-Zone 2-2	1740	470	0.27	NA	NA	☐	☐	☐
18-Zone 2-1-Trm	VAVReheatBox	1	25.00	NA	NA	18-Zone 2-1	1740	470	0.27	NA	NA	☐	☐	☐
17-Zone 1-16-Trm	VAVReheatBox	1	25.00	NA	NA	17-Zone 1-16	1200	600	0.50	NA	NA	☐	☐	☐
16-Zone 1-17-Trm	VAVReheatBox	1	25.00	NA	NA	16-Zone 1-17	1600	592	0.37	NA	NA	☐	☐	☐
15-Zone 1-15-Trm	VAVReheatBox	1	25.00	NA	NA	15-Zone 1-15	1680	454	0.27	NA	NA	☐	☐	☐
14-Zone 1-14-Trm	VAVReheatBox	1	25.00	NA	NA	14-Zone 1-14	1680	454	0.27	NA	NA	☐	☐	☐
13-Zone 1-13-Trm	VAVReheatBox	1	25.00	NA	NA	13-Zone 1-13	1680	454	0.27	NA	NA	☐	☐	☐
12-Zone 1-12-Trm	VAVReheatBox	1	25.00	NA	NA	12-Zone 1-12	1600	432	0.27	NA	NA	☐	☐	☐
11-Zone 1-11-Trm	VAVReheatBox	1	25.00	NA	NA	11-Zone 1-11	1000	300	0.30	NA	NA	☐	☐	☐
10-Zone 1-10-Trm	VAVReheatBox	1	25.00	NA	NA	10-Zone 1-10	1600	432	0.27	NA	NA	☐	☐	☐
9-Zone 1-9-Trm	VAVReheatBox	1	25.00	NA	NA	9-Zone 1-9	900	243	0.27	NA	NA	☐	☐	☐
8-Zone 1-8-Trm	VAVReheatBox	1	25.00	NA	NA	8-Zone 1-8	460	207	0.45	NA	NA	☐	☐	☐
7-Zone 1-7-Trm	VAVReheatBox	1	25.00	NA	NA	7-Zone 1-7	240	146	0.61	NA	NA	☐	☐	☐
6-Zone 1-6-Trm	VAVReheatBox	1	25.00	NA	NA	6-Zone 1-6	600	366	0.61	NA	NA	☐	☐	☐
5-Zone 1-5-Trm	VAVReheatBox	1	25.00	NA	NA	5-Zone 1-5	800	160	0.20	NA	NA	☐	☐	☐
4-Zone 1-4-Trm	VAVReheatBox	1	25.00	NA	NA	4-Zone 1-4	1600	432	0.27	NA	NA	☐	☐	☐
3-Zone 1-3-Trm	VAVReheatBox	1	25.00	NA	NA	3-Zone 1-3	1460	394	0.27	NA	NA	☐	☐	☐
2-Zone 1-2-Trm	VAVReheatBox	1	25.00	NA	NA	2-Zone 1-2	750	225	0.30	NA	NA	☐	☐	☐
1-Zone 1-1-Trm	VAVReheatBox	1	25.00	NA	NA	1-Zone 1-1	1600	432	0.27	NA	NA	☐	☐	☐

Project Name:	Instructional Building 2 Compton College	NRCC-PRF-01-E	Page 20 of 24
Project Address:	1111 E Artesia Blvd Compton 90221	Calculation Date/Time:	11:07, Mon, Nov 19, 2018
Compliance Scope:	NewComplete	Input File Name:	COMPTON EPRO_v7_T24.cibd16x

C. EXHAUST FAN SUMMARY

This Section Does Not Apply

D. DHW EQUIPMENT SUMMARY – *(Adapted from NRCC-PLB-01)* — § 110.3

1. DHW Name	2. Heater Element Type	3. Tank Type	4. Qty	5. Tank Vol (gal)	6. Rated Input (kBtu/h)	7. Efficiency	8. Tank Insulation R-value (Int/Ext)	9. Standby Loss Fraction	10. Heat Pump Type	11. Tank Location or Ambient Condition	Confirmed Pass	Fail
Lochinvar CLN 1203	Gas	Storage	1	81.00	120	Thrml. Eff.: 0.80	NA	SBLF: 0.001	NA	NA	☐	☐

E. MULTI-FAMILY CENTRAL DHW SYSTEM DETAILS

This Section Does Not Apply

F. SOLAR HOT WATER HEATING SUMMARY (Adapted from NRCC-STH-01)

This Section Does Not Apply

Project Name:	Instructional Building 2 Compton College	NRCC-PRF-01-E	Page 21 of 24
Project Address:	1111 E Artesia Blvd Compton 90221	Calculation Date/Time:	11:07, Mon, Nov 19, 2018
Compliance Scope:	NewComplete	Input File Name:	COMPTON EPRO_v7_T24.cibd16x

G. MECHANICAL HVAC ACCEPTANCE TESTS & FORMS *(Adapted from 2016-NRCC-MCH-01-E)* — § RA4

Declaration of Required Acceptance Certificates (NRCA) – Acceptance Certificates that may be submitted. (Retain copies and verify forms are completed and signed to post in field for Field Inspector to verify).

Test Description		MCH-02A	MCH-03A	MCH-04A	MCH-05A	MCH-06A	MCH-07A	MCH-08A	MCH-09A	MCH-10A	MCH-11A	MCH-12A	MCH-13A	MCH-14A	MCH-15A	MCH-16A	MCH-17A	MCH-18A	Confirmed	
Equipment Requiring Testing or Verification	# of units	Outdoor Air	Single Zone Unitary	Air Dist. Ducts	Economizer Controls	DCV	Supply Fan VAV	Valve leakage	Supply Water Temp. Reset	Hyd. Variable Flow Control	Auto Demand Shed Control	FDD for DX Units	Auto FDD for Air & Zone	Dist. Energy Storage DX AC	TES Systems	Supply Air Temp. Reset	Condenser Water Reset Controls	ECMS	Pass	Fail
CC INSTRUCT BLDG #21 - HotWater	1	--	--	--	--	--	--	--	--	--	--	--	--	--	--	--	--	--	☐	☐
CC INSTRUCT BLDG #21 - SHW	1	--	--	--	--	--	--	--	--	--	--	--	--	--	--	--	--	--	☐	☐
CC INSTRUCT BLDG #21 - CW	1	--	--	--	--	--	--	--	--	--	--	--	--	--	--	--	--	--	☐	☐
CC INSTRUCT BLDG #21 - ChillSys	1	--	--	--	--	--	--	--	--	--	--	--	--	--	--	--	--	--	☐	☐
AHU-1	1	X	--	--	X	X	X	--	--	--	X	--	--	--	--	X	--	--	☐	☐

H. EVAPORATIVE COOLER SUMMARY

This Section Does Not Apply

Project Name:	Instructional Building 2 Compton College	NRCC-PRF-01-E	Page 22 of 24
Project Address:	1111 E Artesia Blvd Compton 90221	Calculation Date/Time:	11:07, Mon, Nov 19, 2018
Compliance Scope:	NewComplete	Input File Name:	COMPTON EPRO_v7_T24.cibd16x

NRCC-PRF-LTI-DETAILS -SECTION START-

A. INDOOR CONDITIONED LIGHTING CONTROL CREDITS (Adapted from NRCC-LTI-02-E) — § 140.6

This Section Does Not Apply

B. INDOOR CONDITIONED LIGHTING MANDATORY LIGHTING CONTROLS (Adapted from NRCC-LTI-02-E) — § 130.1

This Section Does Not Apply

§130.1(a) = Manual area controls; §130.0(b) = Multi Level; §130.1(c) = Auto Shut-Off; §130.1(d) = Mandatory Daylight; §130.1(e) = Demand Responsive

C. TAILORED METHOD CONDITIONED LIGHTING POWER ALLOWANCE SUMMARY AND CHECKLIST (Adapted from NRCC-LTI-04-E) — § 140.6

General lighting power (see Table D)	0
General lighting power from special function areas (see Table E)	NA
Additional "use it or lose it" (See Table G)	0
Total watts	0

D. GENERAL LIGHTING POWER (Adapted from NRCC-LTI-04-E) — § 140.6-D

This Section Does Not Apply

E. GENERAL LIGHTING FROM SPECIAL FUNCTION AREAS (Adapted from NRCC-LTI-04-E) — § 140.6(c) 3H

Room Number	Primary Function Area	Illuminance Value (LUX)	Room Cavity Ratio (Table G)	Allowed LPD	Floor Area (ft^2)	Allowed Watts	Confirmed Pass	Fail
NA	NA	NA	NA	NA	NA	NA	☐	☐

Note: Tailored Method for Special Function Areas is not currently implemented

F. ROOM CAVITY RATIO (Adapted from NRCC-LTI-04-E)

Rectangular Spaces

Room Number	Task/Activity Description	Room Length (ft)	Room Width (ft)	Room Cavity Height (ft)	RCR	Confirmed Pass	Fail
NA	NA	NA	NA	NA	NA	☐	☐

Non-Rectangular Spaces

This Section Does Not Apply

Project Name:	Instructional Building 2 Compton College	NRCC-PRF-01-E	Page 23 of 24
Project Address:	1111 E Artesia Blvd Compton 90221	Calculation Date/Time:	11:07, Mon, Nov 19, 2018
Compliance Scope:	NewComplete	Input File Name:	COMPTON EPRO_v7_T24.cibd16x

Note: All applicable spaces are listed under the Non-Rectangular Spaces table

G. ADDITIONAL "USE IT OR LOSE IT" (Adapted from NRCC-LTI-04-E)

1. Wall Display	2. Combined Floor Display and Task Lighting	3. Combined Ornamental and Special Effects Lighting	4. Very Valuable Merchandise	Allowed Watts	Confirmed Pass	Fail
0	0	0	0	**0**	☐	☐

5. Wall Display

This Section Does Not Apply

6. Floor Display and Task Lighting

This Section Does Not Apply

7. Combined Ornamental and Special Effects Lighting

This Section Does Not Apply

8. Very Valuable Merchandise

This Section Does Not Apply

H. INDOOR & OUTDOOR LIGHTING ACCEPTANCE TESTS & FORMS (Adapted from NRCC-LTI-01-E and NRCC-LTO-01-E) — § 130.4

Declaration of Required Acceptance Certificates (NRCA) –Acceptance Certificates that must be verified in the field. (Retain copies and verify forms are completed and signed to post in field for Field Inspector to verify).

Test Description		Indoor NRCA-LTI-02-A	Indoor NRCA-LTI-03-A	Indoor NRCA-LTI-04-A	Outdoor NRCA-LTO-02-A	Confirmed Pass	Fail
Equipment Requiring Testing or Verification	# of units	Occ Sensors / Auto Time Switch	Auto Daylight	Demand Responsive	Outdoor Controls		
Occupant Sensors	0	☒	☐	☐	☐	☐	☐
Automatic Time Switch	0	☒	☐	☐	☐	☐	☐
Automatic Daylighting	0	☐	☒	☐	☐	☐	☐
Demand Responsive	1	☐	☐	☒	☐	☐	☐
Outdoor Controls	0	☐	☐	☐	☐	☐	☐

Project Name:	Instructional Building 2 Compton College	NRCC-PRF-01-E	Page 24 of 24
Project Address:	1111 E Artesia Blvd Compton 90221	Calculation Date/Time:	11:07, Mon, Nov 19, 2018
Compliance Scope:	NewComplete	Input File Name:	COMPTON EPRO_v7_T24.cibd16x

ENVELOPE MANDATORY MEASURES: NONRESIDENTIAL — ENV-MM

Project Name: *Instructional Building 2 Compton College* — Date: *11/19/2018*

DESCRIPTION

Building Envelope Measures:

§110.8(a):	Installed insulating material shall have been certified by the manufacturer to comply with the California Quality Standards for insulating material, Title 20 Chapter 4, Article 3.
§110.8(c):	All Insulating Materials shall be installed in compliance with the flame spread rating and smoke density requirements of Sections 2602 and 707 of Title 24, Part 2.
§110.8(g):	Heated slab floors shall be insulated according to the requirements in Table 110.8-A.
§110.7(a):	All Exterior Joints and openings in the building that are observable sources of air leakage shall be caulked, gasketed, weatherstripped or otherwise sealed.
§110.6(a):	Manufactured fenestration products and exterior doors shall have air infiltration rates not exceeding 0.3 cfm/ft.² of window area, 0.3 cfm/ft.² of door area for residential doors, 0.3 cfm/ft.² of door area for nonresidential single doors (swinging and sliding), and 1.0 cfm/ft.² for nonresidential double doors (swinging).
§110.6(a):	Fenestration U-factor shall be rated in accordance with NFRC 100, or the applicable default U-factor.
§110.6(a) :	Fenestration SHGC shall be rated in accordance with NFRC 200, or NFRC 100 for site-built fenestration, or the applicable default SHGC.
§110.6(b):	Site Constructed Doors, Windows and Skylights shall be caulked between the unit and the building, and shall be weatherstripped (except for unframed glass doors and fire doors).
§120.7(a):	The opaque portions of the roof/ceiling that separates conditioned spaces from unconditioned spaces or ambient air shall meet the applicable U-Factor requirements as follows: **Metal Building-** The weighted average U-factor of the roof assembly shall not exceed 0.098. **Wood Framed and Others-** The weighted average U-factor of the roof assembly shall not exceed 0.075.
§120.7(b):	The opaque portions of walls that separate conditioned spaces from unconditioned spaces or ambient air shall meet the applicable U-factor as follows: **Metal Building-** The weighted average U-factor of the wall assembly shall not exceed 0.113. **Metal Framed-** The weighted average U-factor of the wall assembly shall not exceed 0.151. **Light Mass Walls-** A 6 inch or greater Hollow Core Concrete Masonry Unit shall have a U-factor not to exceed 0.440. **Heavy Mass Walls-** An 8 inch or greater Hollow Core Concrete Masonry Unit shall have a U-factor not to exceed 0.690. **Wood Framed and Others-** The weighted average U-factor of the wall assembly shall not exceed 0.110. **Spandrel Panels and Opaque Curtain Wall-** The weighted average U-factor of the spandrel panels and opaque curtain wall assembly shall not exceed 0.280. **Demising Walls-**. The opaque portions of framed demising walls shall meet the requirements of Item A or B below: A. Wood framed walls shall be insulated to meet a U-factor not greater than 0.099. B. Metal Framed walls shall be insulated to meet a U-factor not greater than 0.151.
§120.7(c):	The opaque portions of floors and soffits that separate conditioned spaces from unconditioned spaces or ambient air shall meet the applicable U-Factor requirements as follows: **Raised Mass Floors-** Shall have a minimum of 3 inches of lightweight concrete over a metal deck or the weighted average U-factor of the floor assembly shall not exceed 0.269. **Other Floors-**The weighted average U-factor of the floor assembly shall not exceed 0.071.

4/8/2019 5:58:50 PM

IDENTIFICATION STAMP
DIV. OF THE STATE ARCHITECT
APP. 03-119458 INC:
REVIEWED FOR
SS ☑ FLS ☑ ACS ☑
DATE:05/23/2019

DIVISION OF THE STATE ARCHITECT
355 South Grand Avenue, Suite 2100
Los Angeles, CA 90012
ph: (213) 897-3995 fx:(213) 897-3159

agency

tBP architecture planning interiors

tBP/Architecture
4611 Teller Avenue
Newport Beach, CA 92660
ph: 949.673.0300 fx: 949.732.3895

architect

CAPITAL ENGINEERING CONSULTANTS, INC.
LONG BEACH, CALIFORNIA
CM - RH/SL/TS — PM - DESIGN TEAM
171221.00 — PROJECT NO.

REGISTERED PROFESSIONAL ENGINEER — CHRISTOPHER V. MERCURIO — M 34011 — EXPIRES 3/30/20 — MECHANICAL — STATE OF CALIFORNIA

DATE SIGNED: 04/05/19

consultant

COMPTON COLLEGE
INSTRUCTIONAL BUILDING No.2

COMPTON COMMUNITY COLLEGE DISTRICT
1111 E. ARTESIA BLVD. COMPTON, CA.

owner

tBP project number: 20998.00

file name:

drawn by: checked by:

date: 11 / 20 / 2018

rev: date: description:

THIS DRAWING AND THE DESIGNS, DEPICTIONS, IDEAS AND OTHER INFORMATION CONTAINED HEREIN CONSTITUTE UNPUBLISHED WORK OF tBP/ARCHITECTURE AND SHALL REMAIN PROPERTY OF tBP/ARCHITECTURE IN PERPETUITY. NO PART THEREOF SHALL BE REPRODUCED, DISCLOSED, DISTRIBUTED, SOLD, PUBLISHED OR OTHERWISE USED IN ANY WAY WITHOUT THE ADVANCED EXPRESS WRITTEN CONSENT OF tBP/ARCHITECTURE.

drawing title:
TITLE 24 COMPLIANCE

drawing no.
M0-5

drawing of

MECHANICAL SITE PLAN
SCALE1/16" = 1'-0"

1

4/8/2019 5:58:51 PM

IDENTIFICATION STAMP
DIV. OF THE STATE ARCHITECT
APP. 03-119458 INC:
REVIEWED FOR
SS ☑ FLS ☑ ACS ☑
DATE:05/23/2019

DIVISION OF THE STATE ARCHITECT
355 South Grand Avenue, Suite 2100
Los Angeles, CA 90012
ph: (213) 897-3995 fx:(213) 897-3159

agency

tBP
architecture
planning
interiors

tBP/Architecture
4611 Teller Avenue
Newport Beach, CA 92660
ph: 949.673.0300 fx: 949.732.3895

architect

CAPITAL
ENGINEERING CONSULTANTS, INC.
LONG BEACH, CALIFORNIA

CM - RH/SL/TS — PM - DESIGN TEAM
171221.00 — PROJECT NO.

REGISTERED PROFESSIONAL ENGINEER
TIMOTHY V. TSCHOPP
M 34011
Exp. 6/30/2020
MECHANICAL
STATE OF CALIFORNIA

DATE SIGNED: 04/05/19

consultant

COMPTON COLLEGE
INSTRUCTIONAL BUILDING No.2

COMPTON COMMUNITY COLLEGE DISTRICT
1111 E. ARTESIA BLVD. COMPTON, CA.

owner

tBP project number: 20998.00
file name:
drawn by: checked by:
date: 11 / 20 / 2018

rev:	date:	description:

THIS DRAWING AND THE DESIGNS, DEPICTIONS, IDEAS AND OTHER INFORMATION CONTAINED HEREIN CONSTITUTE UNPUBLISHED WORK OF tBP/ARCHITECTURE AND SHALL REMAIN PROPERTY OF tBP/ARCHITECTURE IN PERPETUITY. NO PART THEREOF SHALL BE REPRODUCED, DISCLOSED, DISTRIBUTED, SOLD, PUBLISHED OR OTHERWISE USED IN ANY WAY WITHOUT THE ADVANCED EXPRESS WRITTEN CONSENT OF tBP/ARCHITECTURE.

drawing title:
MECHANICAL SITE PLAN

drawing no.
M0-6

drawing of

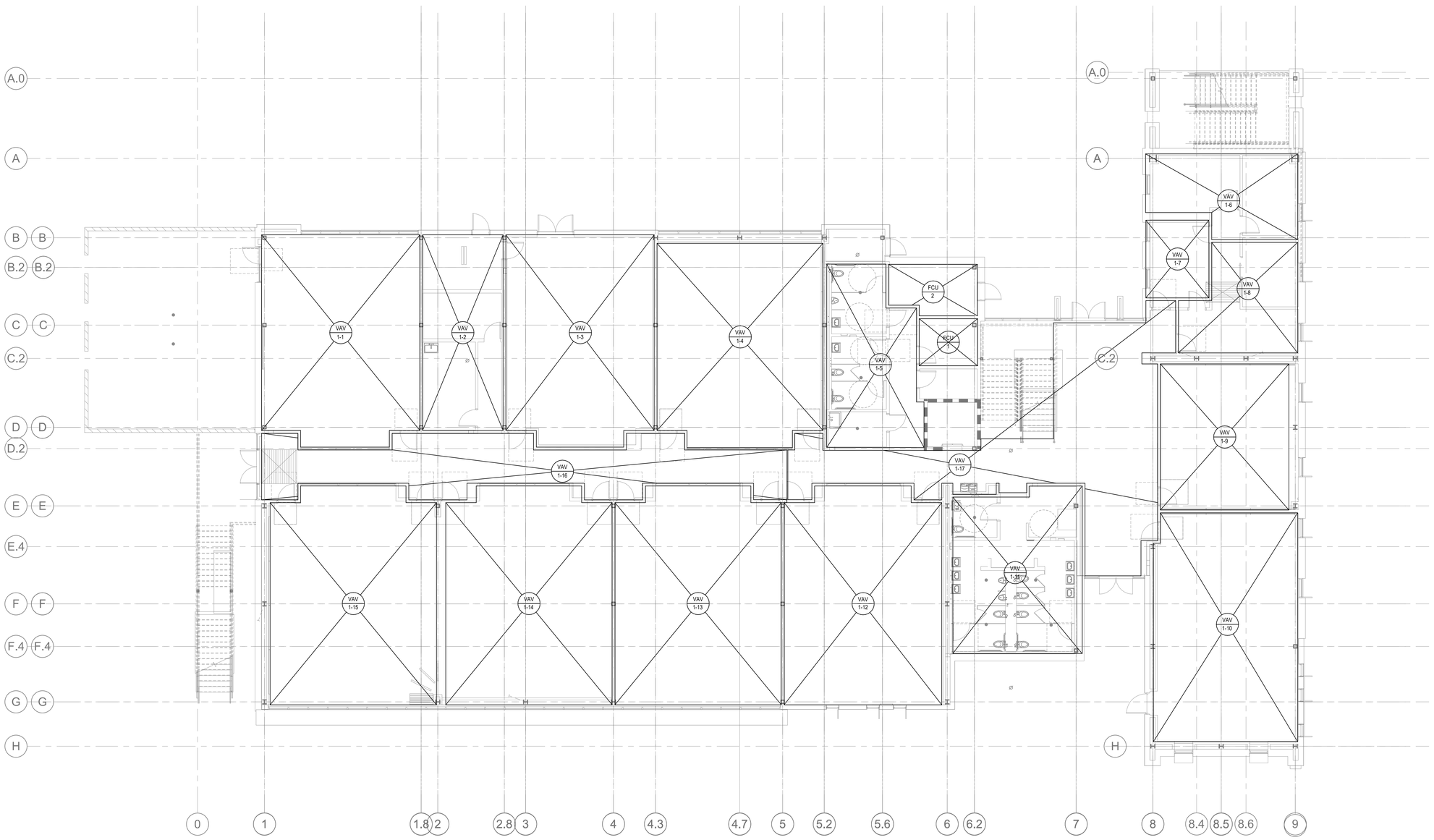

MECH ZONING PLAN 1ST FLOOR PLAN 1

SCALE 1/8" = 1'-0"

IDENTIFICATION STAMP
DIV. OF THE STATE ARCHITECT
APP. 03-119458 INC:
REVIEWED FOR
SS ☑ FLS ☑ ACS ☑
DATE:05/23/2019

DIVISION OF THE STATE ARCHITECT
355 South Grand Avenue, Suite 2100
Los Angeles, CA 90012
ph: (213) 897-3995 fx:(213) 897-3159

agency

tBP
architecture
planning
interiors

tBP/Architecture
4611 Teller Avenue
Newport Beach, CA 92660
ph: 949.673.0300 fx: 949.732.3895

architect

CAPITAL
ENGINEERING CONSULTANTS, INC.
LONG BEACH, CALIFORNIA
CM - RH/SL/TS 171221.00
PM - DESIGN TEAM PROJECT NO.

REGISTERED PROFESSIONAL ENGINEER
CHRISTOPHER V. MERCURIO
M 34011
EXPIRES 03/30/20
MECHANICAL
STATE OF CALIFORNIA

DATE SIGNED: 04/05/19

consultant

COMPTON COLLEGE
INSTRUCTIONAL BUILDING No.2

COMPTON COMMUNITY COLLEGE DISTRICT
1111 E. ARTESIA BLVD. COMPTON, CA.

owner

tBP project number: 20998.00
file name:
drawn by: checked by:
date: 11 / 20 / 2018

rev:	date:	description:

THIS DRAWING AND THE DESIGNS, DEPICTIONS, IDEAS AND OTHER INFORMATION CONTAINED HEREIN CONSTITUTE UNPUBLISHED WORK OF tBP/ARCHITECTURE AND SHALL REMAIN PROPERTY OF tBP/ARCHITECTURE IN PERPETUITY. NO PART THEREOF SHALL BE REPRODUCED, DISCLOSED, DISTRIBUTED, SOLD, PUBLISHED OR OTHERWISE USED IN ANY WAY WITHOUT THE ADVANCED EXPRESS WRITTEN CONSENT OF tBP/ARCHITECTURE

drawing title:
MECH ZONING PLAN 1ST FLOOR PLAN

drawing
MZ1-1
drawing of

4/8/2019 5:59:23 PM

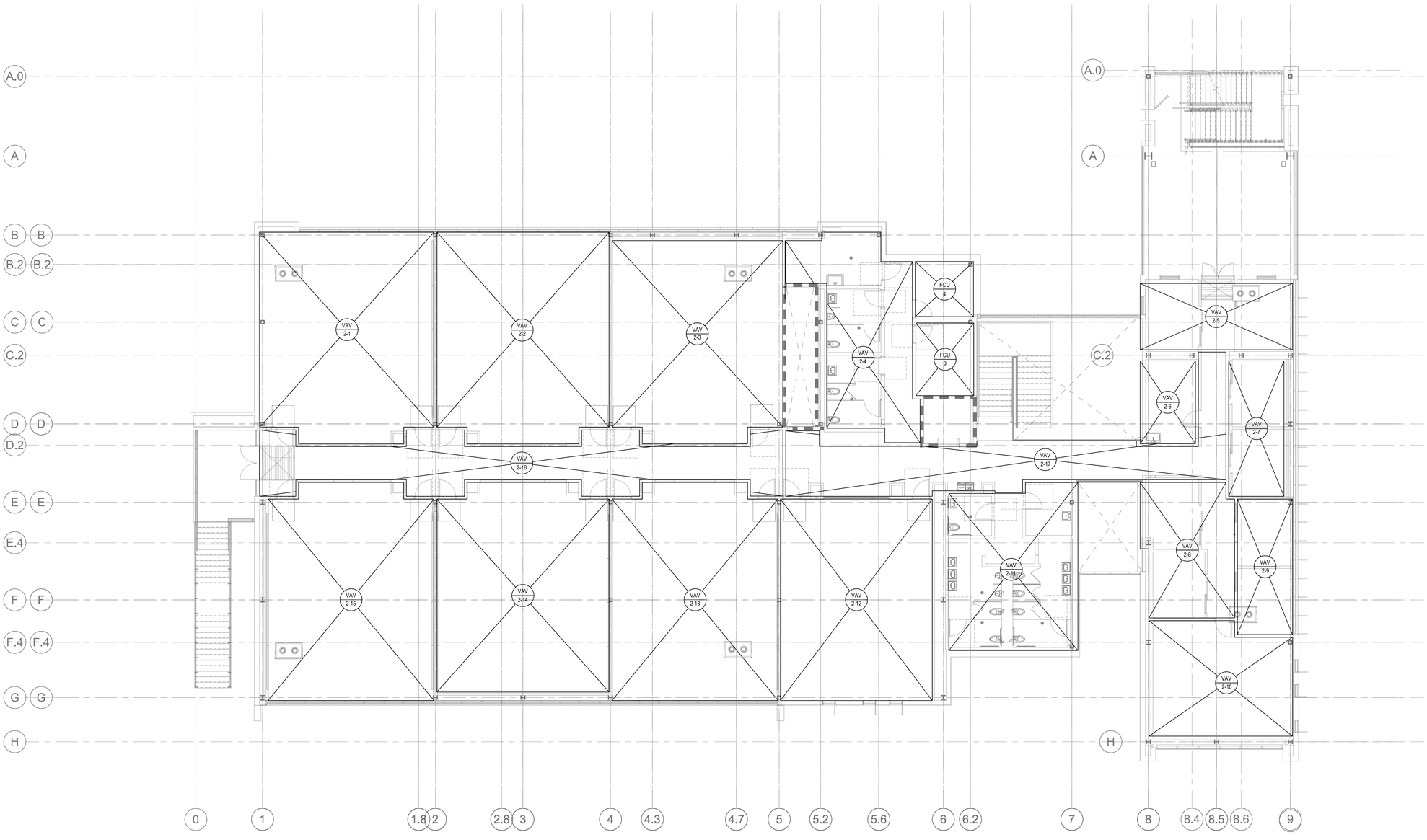

MECH ZONING PLAN 2ND FLOOR PLAN 1

SCALE 1/8" = 1'-0"

IDENTIFICATION STAMP
DIV. OF THE STATE ARCHITECT
APP. 03-119458 INC:
REVIEWED FOR
SS ☑ FLS ☑ ACS ☑
DATE:05/23/2019

DIVISION OF THE STATE ARCHITECT
355 South Grand Avenue, Suite 2100
Los Angeles, CA 90012
ph: (213) 897-3995 fx:(213) 897-3159

agency

tBP architecture planning interiors

tBP/Architecture
4611 Teller Avenue
Newport Beach, CA 92660
ph: 949.673.0300 fx: 949.732.3895

architect

CAPITAL ENGINEERING CONSULTANTS, INC.
LONG BEACH, CALIFORNIA
CM - RH/SL/TS 171221.00
PM - DESIGN TEAM PROJECT NO.

REGISTERED PROFESSIONAL ENGINEER
CHRISTOPHER V. MERCURY
M 34011
EXPIRES 03/30
MECHANICAL
STATE OF CALIFORNIA

DATE SIGNED: 04/05/19

consultant

COMPTON COLLEGE
INSTRUCTIONAL BUILDING No.2

COMPTON COMMUNITY COLLEGE DISTRICT
1111 E. ARTESIA BLVD. COMPTON, CA.

owner

tBP project number: 20998.00
file name:
drawn by: checked by:
date: 11 / 20 / 2018

rev:	date:	description:

THIS DRAWING AND THE DESIGNS, DEPICTIONS, IDEAS AND OTHER INFORMATION CONTAINED HEREIN CONSTITUTE UNPUBLISHED WORK OF tBP/ARCHITECTURE AND SHALL REMAIN PROPERTY OF tBP/ARCHITECTURE IN PERPETUITY. NO PART THEREOF SHALL BE REPRODUCED, DISCLOSED, DISTRIBUTED, SOLD, PUBLISHED OR OTHERWISE USED IN ANY WAY WITHOUT THE ADVANCED EXPRESS WRITTEN CONSENT OF tBP/ARCHITECTURE.

drawing title:
MECH ZONING PLAN 2ND FLOOR PLAN

drawing #
MZ1-2

drawing of

4/8/2019 5:59:26 PM

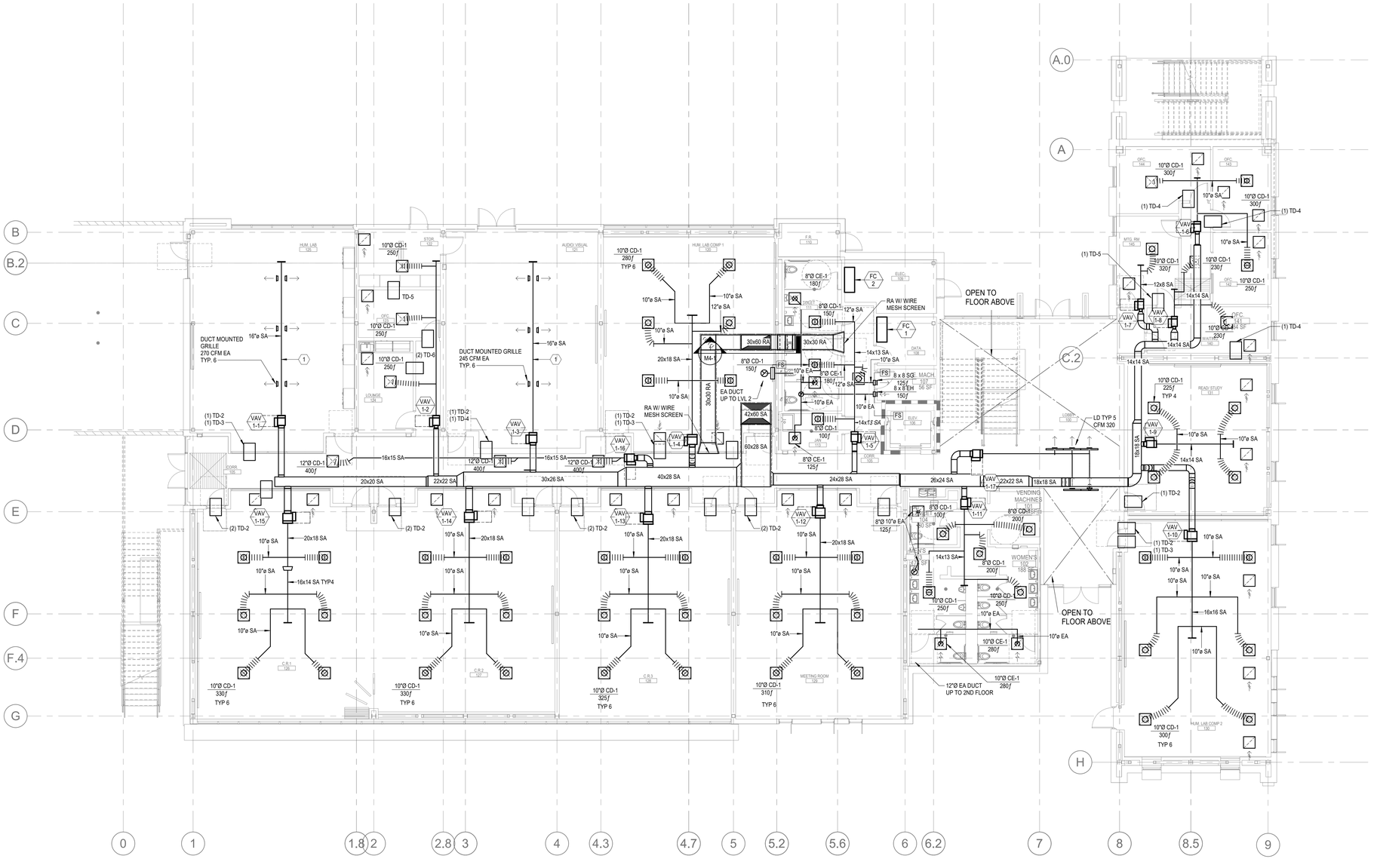

MECH 1ST FLOOR PLAN (1)
SCALE 1/8" = 1'-0"

NORTH

KEY NOTES:

(1) DUCT IS EXPOSED IN ROOM.

GENERAL NOTES:

1. FOR T-STATS AND CO2 SENSORS REFER TO MP SHEETS.
2. FOR TRANSFER DUCT SIZES (TD), REFER TO 11/M1-1 DETAIL.

IDENTIFICATION STAMP
DIV. OF THE STATE ARCHITECT
APP. 03-119458 INC:
REVIEWED FOR
SS ☑ FLS ☑ ACS ☑
DATE:05/23/2019

DIVISION OF THE STATE ARCHITECT
355 South Grand Avenue, Suite 2100
Los Angeles, CA 90012
ph: (213) 897-3995 fx:(213) 897-3159

agency

tBP
architecture
planning
interiors

tBP/Architecture
4611 Teller Avenue
Newport Beach, CA 92660
ph: 949.673.0300 fx: 949.732.3895

architect

CAPITAL
ENGINEERING CONSULTANTS, INC.
LONG BEACH, CALIFORNIA
CM - RH/SL/TS — PM - DESIGN TEAM
171221.00 — PROJECT NO.

REGISTERED PROFESSIONAL ENGINEER
CHRISTOPHER V. RUSSELL
M 34011
EXPIRES 9/30/20
MECHANICAL
STATE OF CALIFORNIA

DATE SIGNED: 04/05/19

consultant

COMPTON COLLEGE
INSTRUCTIONAL BUILDING No.2
COMPTON COMMUNITY COLLEGE DISTRICT
1111 E. ARTESIA BLVD. COMPTON, CA.

owner

tBP project number: 20998.00
file name:
drawn by: checked by:
date: 11 / 20 / 2018

rev:	date:	description:

THIS DRAWING AND THE WORK, DEPICTIONS, IDEAS AND OTHER INFORMATION CONTAINED HEREIN CONSTITUTE UNPUBLISHED WORK OF tBP/ARCHITECTURE AND SHALL REMAIN PROPERTY OF tBP/ARCHITECTURE IN PERPETUITY. NO PART THEREOF SHALL BE REPRODUCED, DISCLOSED, DISTRIBUTED, SOLD, PUBLISHED OR OTHERWISE USED IN ANY WAY WITHOUT THE ADVANCED EXPRESS WRITTEN CONSENT OF tBP/ARCHITECTURE.

drawing title:
MECH 1ST FLOOR PLAN

drawing no.
M1-1
drawing of

4/8/2019 5:58:55 PM

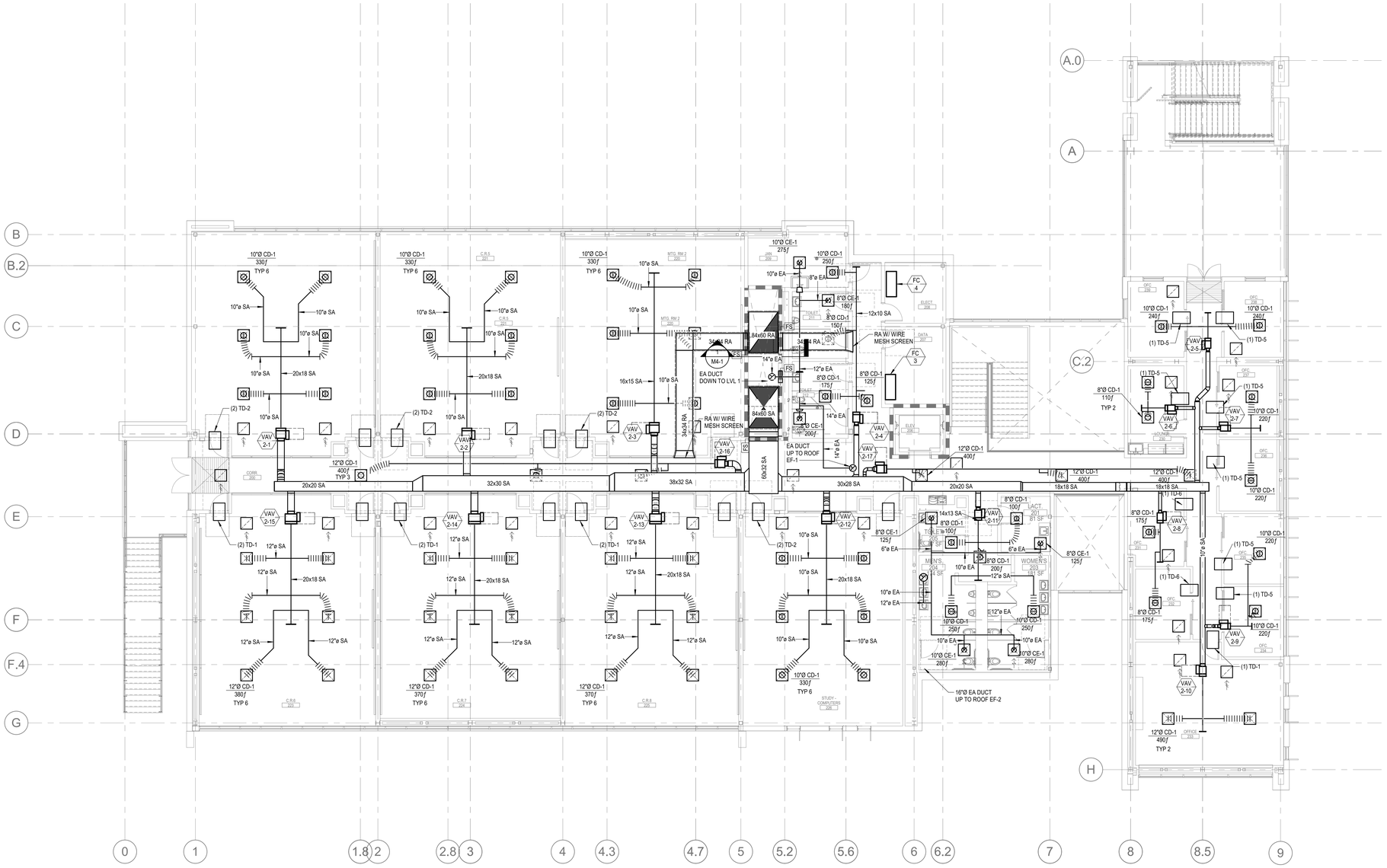

MECH 2ND FLOOR PLAN 1

SCALE 1/8" = 1'-0"

NORTH

GENERAL NOTES:

1. FOR T-STATS AND CO2 SENSORS REFER TO MP SHEETS.
2. FOR TRANSFER DUCT SIZES (TD), REFER TO 11M1-1 DETAIL.

IDENTIFICATION STAMP
DIV. OF THE STATE ARCHITECT
APP. 03-119458 INC:
REVIEWED FOR
SS ☑ FLS ☑ ACS ☑
DATE:05/23/2019

DIVISION OF THE STATE ARCHITECT
355 South Grand Avenue, Suite 2100
Los Angeles, CA 90012
ph: (213) 897-3995 fx:(213) 897-3159

agency

tBP architecture planning interiors

tBP/Architecture
4611 Teller Avenue
Newport Beach, CA 92660
ph: 949.673.0300 fx: 949.732.3895

architect

CAPITAL ENGINEERING CONSULTANTS, INC.
LONG BEACH, CALIFORNIA
CM - RH/SL/TS 171221.00
PM - DESIGN TEAM PROJECT NO.

REGISTERED PROFESSIONAL ENGINEER
CHRISTOPHER V. MERCURIO
M 34011
EXPIRES 9/30/20
MECHANICAL
STATE OF CALIFORNIA

DATE SIGNED: 04/05/19

consultant

COMPTON COLLEGE
INSTRUCTIONAL BUILDING No.2

COMPTON COMMUNITY COLLEGE DISTRICT
1111 E. ARTESIA BLVD. COMPTON, CA.

owner

tBP project number: 20998.00
file name:
drawn by: checked by:
date: 11 / 20 / 2018

rev:	date:	description:

THIS DRAWING AND THE DESIGNS, DEPICTIONS, IDEAS AND OTHER INFORMATION CONTAINED HEREIN CONSTITUTE UNPUBLISHED WORK OF tBP/ARCHITECTURE AND SHALL REMAIN PROPERTY OF tBP/ARCHITECTURE IN PERPETUITY. NO PART THEREOF SHALL BE REPRODUCED, DISCLOSED, DISTRIBUTED, SOLD, PUBLISHED OR OTHERWISE USED IN ANY WAY WITHOUT THE ADVANCED EXPRESS WRITTEN CONSENT OF tBP/ARCHITECTURE.

drawing title:
MECH 2ND FLOOR PLAN

drawing no.
M1-2

drawing of

4/8/2019 5:58:59 PM

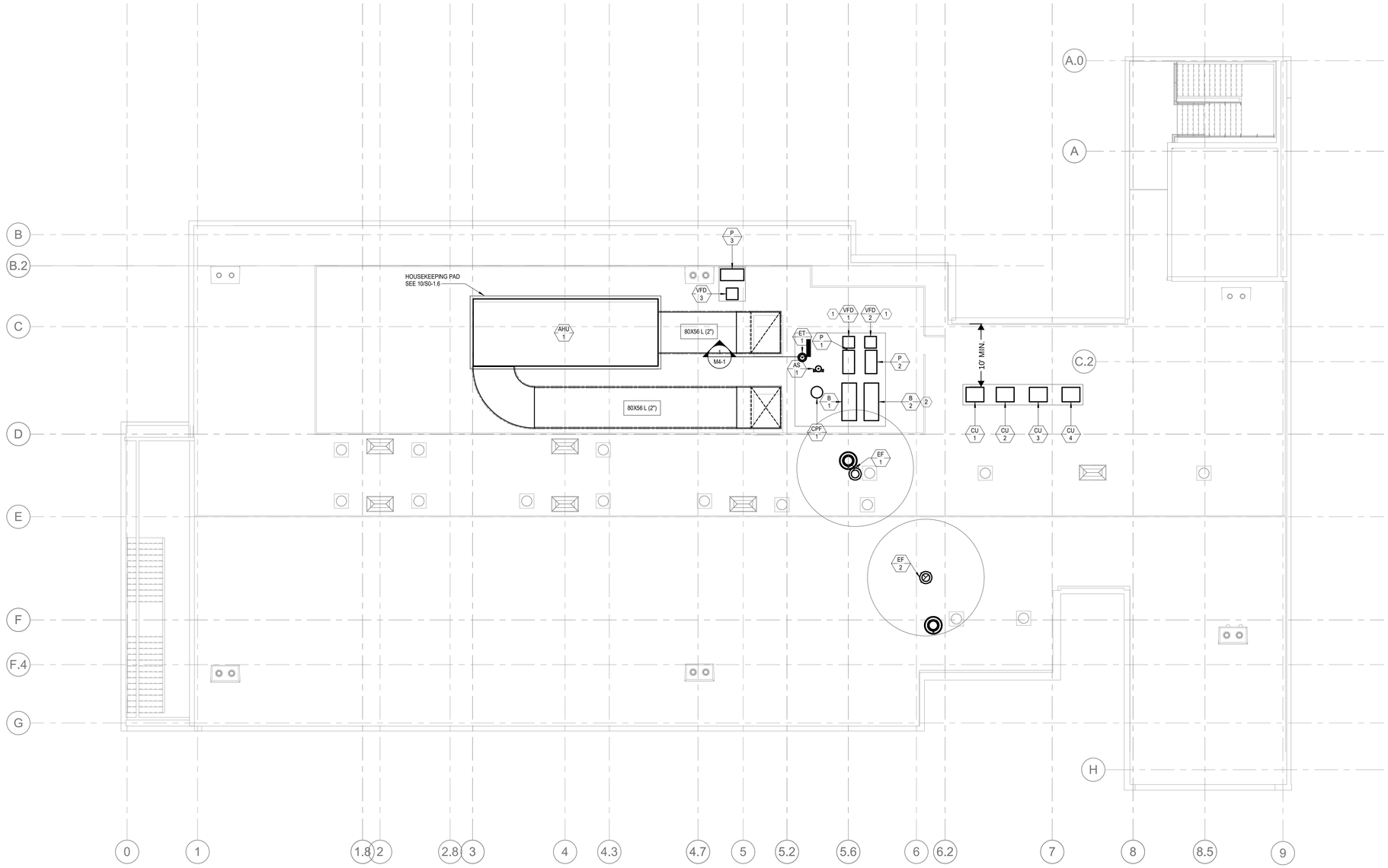

MECH ROOF PLAN 1

SCALE 1/8" = 1'-0"

KEY NOTES:

1. OUTDOOR DUTY NEMA 4 ENCLOSURE
2. BOILER FLUE TERMINATE 26" ABOVE TOP OF UNIT

GENERAL NOTES:

IDENTIFICATION STAMP
DIV. OF THE STATE ARCHITECT
APP. 03-119458 INC:
REVIEWED FOR
SS ☑ FLS ☑ ACS ☑
DATE:05/23/2019

DIVISION OF THE STATE ARCHITECT
355 South Grand Avenue, Suite 2100
Los Angeles, CA 90012
ph: (213) 897-3995 fx:(213) 897-3159

agency

tBP
architecture
planning
interiors

tBP/Architecture
4611 Teller Avenue
Newport Beach, CA 92660
ph: 949.673.0300 fx: 949.732.3895

architect

CAPITAL
ENGINEERING CONSULTANTS, INC.
LONG BEACH, CALIFORNIA
CM - RH/SL/TS 171221.00
PM - DESIGN TEAM PROJECT NO.

REGISTERED PROFESSIONAL ENGINEER
CHRISTOPHER V. MERCURIO
M 34011
EXPIRES 03/30/20
MECHANICAL
STATE OF CALIFORNIA

DATE SIGNED: 04/05/19

consultant

COMPTON COLLEGE
INSTRUCTIONAL BUILDING No.2

COMPTON COMMUNITY COLLEGE DISTRICT
1111 E. ARTESIA BLVD. COMPTON, CA.

owner

tBP project number: 20998.00
file name:
drawn by: checked by:
date: 11 / 20 / 2018

rev:	date:	description:

THIS DRAWING AND THE DESIGNS, DEPICTIONS, IDEAS AND OTHER INFORMATION CONTAINED HEREIN CONSTITUTE UNPUBLISHED WORK OF tBP/ARCHITECTURE AND SHALL REMAIN PROPERTY OF tBP/ARCHITECTURE IN PERPETUITY. NO PART THEREOF SHALL BE REPRODUCED, DISCLOSED, DISTRIBUTED, SOLD, PUBLISHED OR OTHERWISE USED IN ANY WAY WITHOUT THE ADVANCED EXPRESS WRITTEN CONSENT OF tBP/ARCHITECTURE.

drawing title:
MECH ROOF PLAN

drawing no.
M3-1

drawing of

4/8/2019 5:59:00 PM

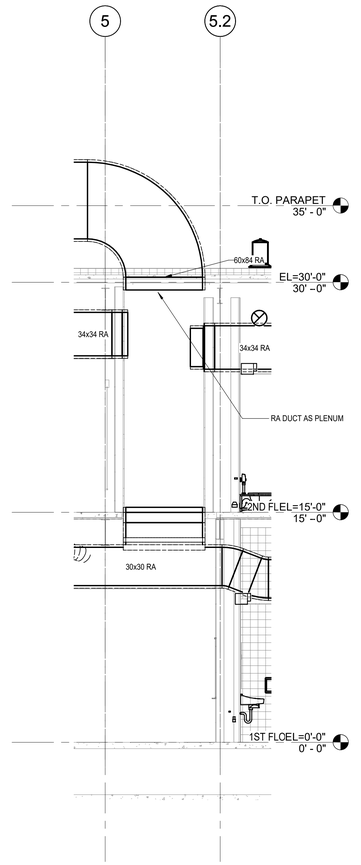

AHU-1 RA DUCT 1
SCALE 1/4" = 1'-0"

IDENTIFICATION STAMP
DIV. OF THE STATE ARCHITECT
APP. 03-119458 INC:
REVIEWED FOR
SS ☑ FLS ☑ ACS ☑
DATE:05/23/2019

DIVISION OF THE STATE ARCHITECT
355 South Grand Avenue, Suite 2100
Los Angeles, CA 90012
ph: (213) 897-3995 fx:(213) 897-3159
agency

tBP
architecture
planning
interiors

tBP/Architecture
4611 Teller Avenue
Newport Beach, CA 92660
ph: 949.673.0300 fx: 949.732.3895
architect

CAPITAL
ENGINEERING CONSULTANTS, INC.
LONG BEACH, CALIFORNIA
CM - RH/SL/TS 171221.00
PM - DESIGN TEAM PROJECT NO.

REGISTERED PROFESSIONAL ENGINEER
CHRISTOPHER V. MERCURIO
M 34011
EXPIRES 9/30/20
MECHANICAL
STATE OF CALIFORNIA

DATE SIGNED: 04/05/19
consultant

COMPTON COLLEGE
INSTRUCTIONAL BUILDING No.2

COMPTON COMMUNITY COLLEGE DISTRICT
1111 E. ARTESIA BLVD. COMPTON, CA.
owner

tBP project number: 20998.00
file name:
drawn by: checked by:
date: 11 / 20 / 2018

rev:	date:	description:

THIS DRAWING AND THE DESIGNS, DEPICTIONS, IDEAS AND OTHER INFORMATION CONTAINED HEREIN CONSTITUTE UNPUBLISHED WORK OF tBP/ARCHITECTURE AND SHALL REMAIN PROPERTY OF tBP/ARCHITECTURE IN PERPETUITY. NO PART THEREOF SHALL BE REPRODUCED, DISCLOSED, DISTRIBUTED, SOLD, PUBLISHED OR OTHERWISE USED IN ANY WAY WITHOUT THE ADVANCED EXPRESS WRITTEN CONSENT OF tBP/ARCHITECTURE.

drawing title:
MECHANICAL SECTIONS

drawing no.
M4-1
drawing of

4/8/2019 5:59:01 PM

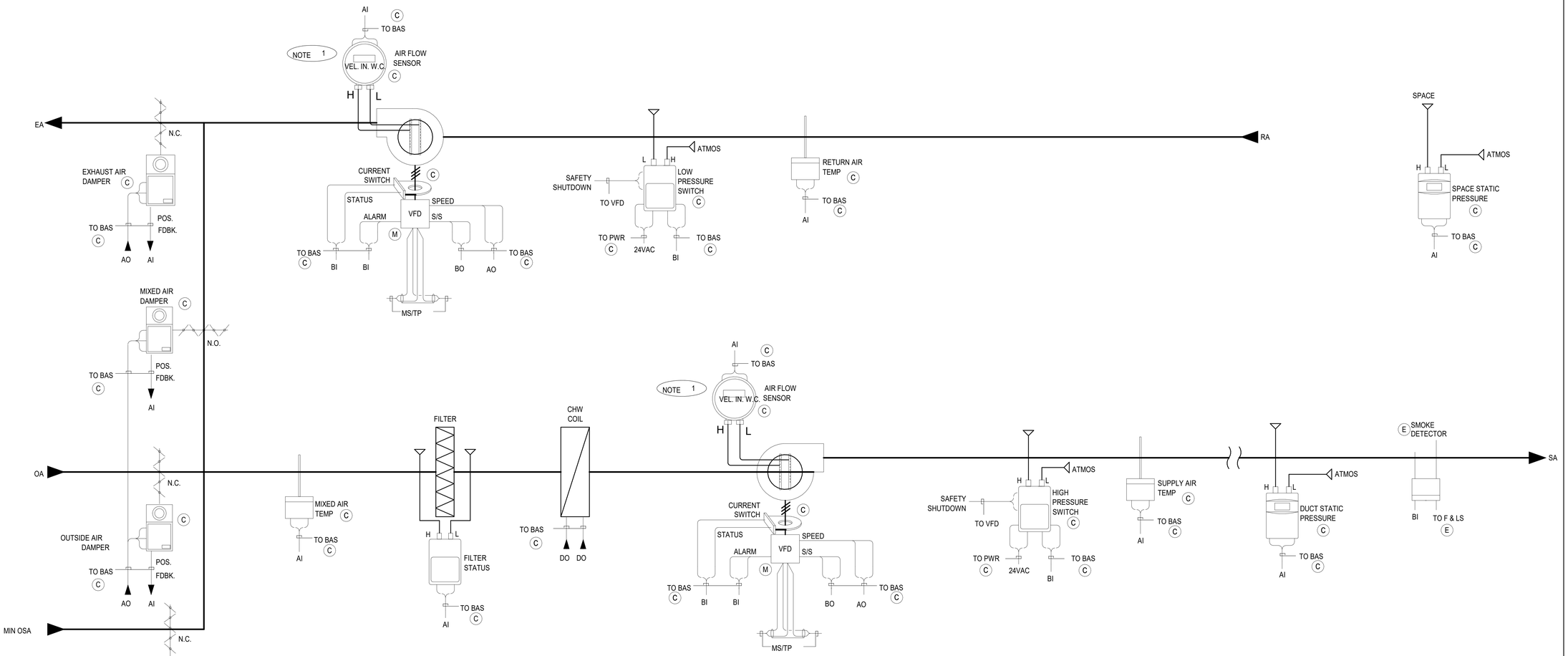

LEGEND:

- (E) = PROVIDED BY ELECTRICAL CONTRACTOR
- (M) = PROVIDED BY MECHANICAL CONTRACTOR
- (C) = PROVIDED BY CONTROLS CONTRACTOR

- LOW VOLTAGE DC WIRING
- LINE VOLTAGE AC WIRING
- CAT-5 CABLING

NOTES:

1. FAN AND OUTSIDE AIR FLOW MEASURING PROBES/TRANSMITTERS TO BE FURNISHED AND INSTALLED BY CONTROLS CONTRACTOR.
2. NOT USED
3. DDC CONTROLS BY CLIMATEC. CONTACT RYAN CHENG 949-394-1865

AHU CONTROL DIAGRAM

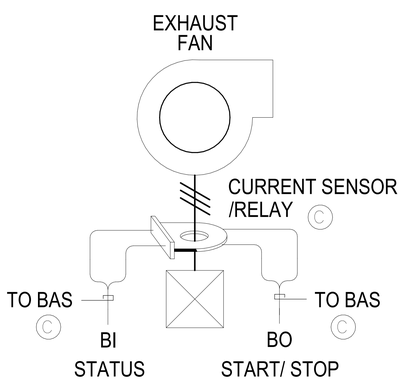

EXHAUST FAN CONTROL DIAGRAM (TYP.)

IDENTIFICATION STAMP
DIV. OF THE STATE ARCHITECT
APP. 03-119458 INC:
REVIEWED FOR
SS ☑ FLS ☑ ACS ☑
DATE:05/23/2019

DIVISION OF THE STATE ARCHITECT
355 South Grand Avenue, Suite 2100
Los Angeles, CA 90012
ph: (213) 897-3995 fx:(213) 897-3159
agency

tBP architecture planning interiors

tBP/Architecture
4611 Teller Avenue
Newport Beach, CA 92660
ph: 949.673.0300 fx: 949.732.3895
architect

CAPITAL ENGINEERING CONSULTANTS, INC.
LONG BEACH, CALIFORNIA
CM - RH/SL/TS 171221.00
PM - DESIGN TEAM PROJECT NO.

REGISTERED PROFESSIONAL ENGINEER
CHRISTOPHER V. MERCURIO
M 34011
EXPIRES 03/30
MECHANICAL
STATE OF CALIFORNIA

DATE SIGNED: 04/05/19
consultant

COMPTON COLLEGE
INSTRUCTIONAL BUILDING No.2
COMPTON COMMUNITY COLLEGE DISTRICT
1111 E. ARTESIA BLVD. COMPTON, CA.
owner

tBP project number: 20998.00
file name:
drawn by: checked by:
date: 11 / 20 / 2018

rev:	date:	description:

THIS DRAWING AND THE DESIGNS, DEPICTIONS, IDEAS AND OTHER INFORMATION CONTAINED HEREIN CONSTITUTE UNPUBLISHED WORK OF tBP/ARCHITECTURE AND SHALL REMAIN PROPERTY OF tBP/ARCHITECTURE IN PERPETUITY. NO PART THEREOF SHALL BE REPRODUCED, DISCLOSED, DISTRIBUTED, SOLD, PUBLISHED OR OTHERWISE USED IN ANY WAY WITHOUT THE ADVANCED EXPRESS WRITTEN CONSENT OF tBP/ARCHITECTURE.

drawing title:
CONTROLS

drawing no.
M5-1
drawing of

4/8/2019 5:59:02 PM

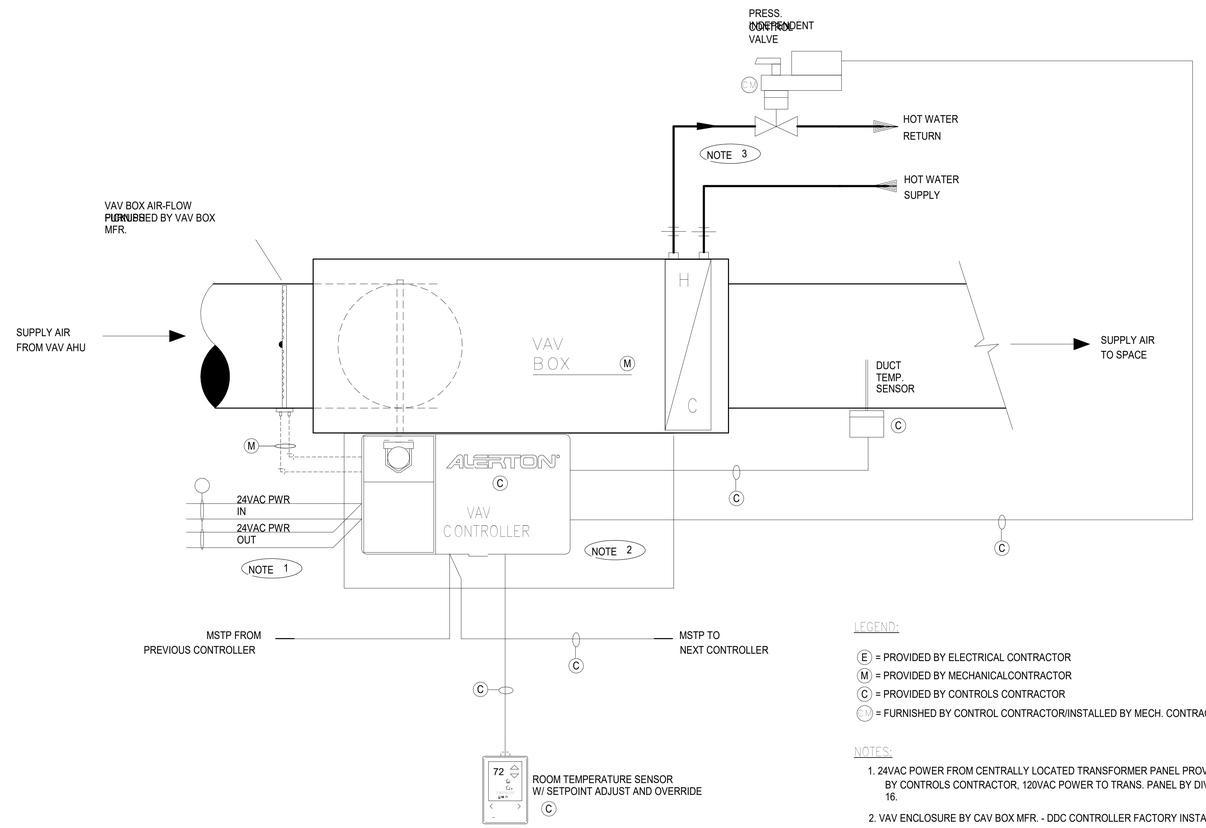

LEGEND:

(E) = PROVIDED BY ELECTRICAL CONTRACTOR
(M) = PROVIDED BY MECHANICALCONTRACTOR
(C) = PROVIDED BY CONTROLS CONTRACTOR
(CM) = FURNISHED BY CONTROL CONTRACTOR/INSTALLED BY MECH. CONTRACTOR

NOTES:

1. 24VAC POWER FROM CENTRALLY LOCATED TRANSFORMER PANEL PROVIDED BY CONTROLS CONTRACTOR, 120VAC POWER TO TRANS. PANEL BY DIV. 16.
2. VAV ENCLOSURE BY CAV BOX MFR. - DDC CONTROLLER FACTORY INSTALLED.
3. PROVIDE 3-WAY CONTROL VALVE AT END OF EACH LOOP.

VARIABLE AIR VOLUME BOX WITH HOT WATER REHEAT (TITLE 24 COMPLIANT)

SCHEDULED ZONE SPACE TEMPERATURE SETPOINT CONTROL:

THE DDC CONTROLS WILL MAINTAIN THE FOLLOWING (ADJ.) OCCUPIED ZONE TEMPERATURE SETPOINTS:
COOLING SETPOINT = 74°F
HEATING SETPOINT = 70°F

THE DDC CONTROLS WILL MAINTAIN THE FOLLOWING (ADJ.) UNOCCUPIED ZONE TEMPERATURE SETPOINTS:
COOLING SETPOINT = 85°F
HEATING SETPOINT = 55°F

ZONE SETPOINT ADJUST:
THE OCCUPANT SHALL BE ABLE TO ADJUST THE ZONE TEMPERATURE HEATING AND COOLING SETPOINTS AT THE SPACE TEMPERATURE SENSOR, +/- 2°F (ADJ.)

ZONE UNOCCUPIED OVERRIDE:
A TIMED LOCAL OVERRIDE CONTROL SHALL ALLOW AN OCCUPANT TO OVERRIDE THE SCHEDULE AND PLACE THE ZONE INTO AN OCCUPIED MODE FOR 30MINS/PULSE (MAX 1HR AND 30MINS, ADJ.). AT THE EXPIRATION OF THIS TIME, CONTROL OF THE ZONE SHALL AUTOMATICALLY RETURN TO THE SCHEDULE.

DUAL MAXIMUM AIRFLOW - HOT WATER REHEAT VALVE CONTROL:
1. WHEN THE ZONE IS IN THE COOLING MODE, THE COOLING LOOP OUTPUT IS MAPPED TO THE AIRFLOW SETPOINT FROM THE COOLING MAXIMUM TO THE MINIMUM AIRFLOW SETPOINTS. THE HOT WATER VALVE IS CLOSED.

2. WHEN THE ZONE IS IN THE DEADBAND MODE, THE AIRFLOW SETPOINT SHALL BE THE MINIMUM AIRFLOW SETPOINT. THE HOT WATER VALVE IS CLOSED.

3. WHEN THE ZONE IS IN THE HEATING MODE, THE HEATING LOOP SHALL MAINTAIN SPACE TEMPERATURE AT THE HEATING SETPOINT AS FOLLOWS:

- FROM 0%-50% LOOP SIGNAL, THE HEATING LOOP OUTPUT SHALL RESET THE DISCHARGE TEMPERATURE FROM SUPPLY AIR TEMPERATURE SETPOINT (E.G.,55°F) TO 90°F. NOTE THE UPPER TEMPERATURE IS LIMITED TO PREVENT STRATIFICATION DURING HEATING.
- FROM 50%-100% LOOP SIGNAL, THE HEATING LOOP OUTPUT SHALL RESET THE ZONE AIRFLOW SETPOINT FROM THE MINIMUM AIRFLOW SETPOINT TO THE MAXIMUM HEATING AIRFLOW SETPOINT. THE SUPPLY AIR DISCHARGE TEMPERATURE REMAINS AT 90°F.

4. THE HOT WATER VALVE SHALL BE MODULATED USING A PI CONTROL LOOP TO MAINTAIN THE DISCHARGE TEMPERATURE AT SETPOINT. NOTE THAT DIRECTLY CONTROLLING THE HOT WATER VALVE FROM THE ZONE TEMPERATURE PI LOOP IS NOT ACCEPTABLE SINCE IT SHALL NOT ALLOW SUPPLY AIR TEMPERATURE TO BE UNDER
CONTROL AND LIMITED IN TEMPERATURE TO PREVENT STRATIFICATION.

5. THE VAV DAMPER SHALL BE MODULATED TO MAINTAIN THE MEASURED AIRFLOW AT SETPOINT.

DISCHARGE AIR TEMPERATURE:
THE CONTROLLER SHALL MONITOR THE DISCHARGE AIR TEMPERATURE.

ALARMS SHALL BE PROVIDED AS FOLLOWS:
HIGH ZONE TEMP: IF THE ZONE TEMPERATURE IS GREATER THAN THE COOLING SETPOINT BY 4°F (ADJ.).
LOW ZONE TEMP: IF THE ZONE TEMPERATURE IS LESS THAN THE HEATING SETPOINT BY 4°F (ADJ.).

VAV BOX WITH REHEAT CONTROL DIAGRAM

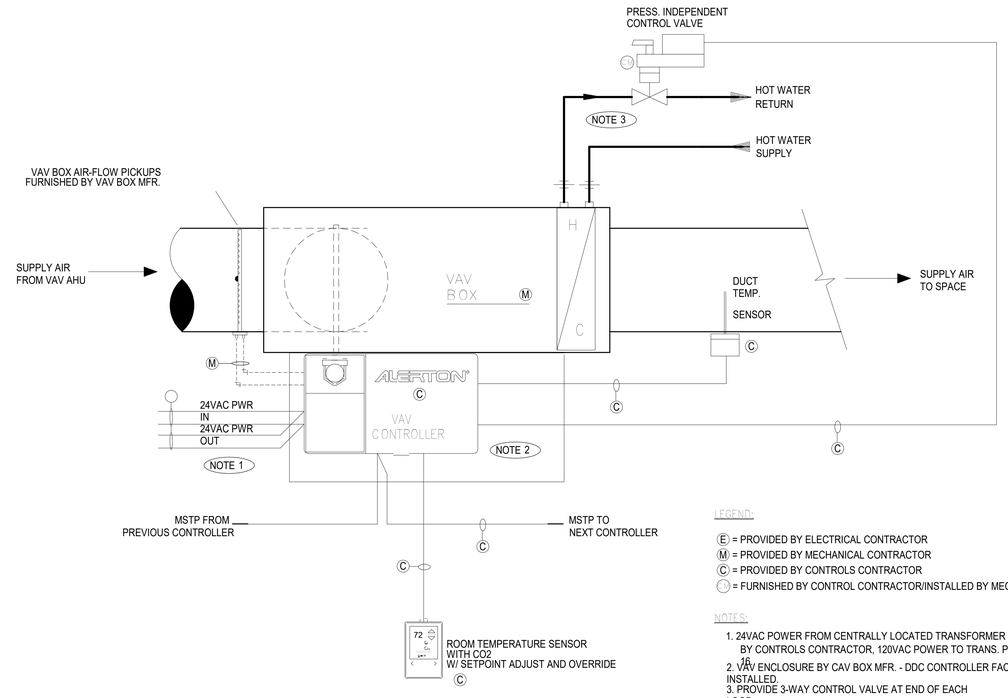

LEGEND:

(E) = PROVIDED BY ELECTRICAL CONTRACTOR
(M) = PROVIDED BY MECHANICAL CONTRACTOR
(C) = PROVIDED BY CONTROLS CONTRACTOR
(CM) = FURNISHED BY CONTROL CONTRACTOR/INSTALLED BY MECH. CONTRACTOR

NOTES:

1. 24VAC POWER FROM CENTRALLY LOCATED TRANSFORMER PANEL PROVIDED BY CONTROLS CONTRACTOR, 120VAC POWER TO TRANS. PANEL BY DIV. 16.
2. VAV ENCLOSURE BY CAV BOX MFR. - DDC CONTROLLER FACTORY INSTALLED.
3. PROVIDE 3-WAY CONTROL VALVE AT END OF EACH LOOP.

VARIABLE AIR VOLUME BOX WITH HOT WATER REHEAT & CO2 CONTROL (TITLE 24 COMPLIANT)

SCHEDULED ZONE SPACE TEMPERATURE SETPOINT CONTROL:

THE DDC CONTROLS WILL MAINTAIN THE FOLLOWING (ADJ.) OCCUPIED ZONE TEMPERATURE SETPOINTS:
COOLING SETPOINT = 74°F
HEATING SETPOINT = 70°F
THE DDC CONTROLS WILL MAINTAIN THE FOLLOWING (ADJ.) UNOCCUPIED ZONE TEMPERATURE SETPOINTS:
COOLING SETPOINT = 85°F
HEATING SETPOINT = 55°F

ZONE SETPOINT ADJUST:
THE OCCUPANT SHALL BE ABLE TO ADJUST THE ZONE TEMPERATURE HEATING AND COOLING SETPOINTS AT THE SPACE TEMPERATURE SENSOR, +/- 2°F (ADJ.)

ZONE UNOCCUPIED OVERRIDE:
A TIMED LOCAL OVERRIDE CONTROL SHALL ALLOW AN OCCUPANT TO OVERRIDE THE SCHEDULE AND PLACE THE ZONE INTO AN OCCUPIED MODE FOR 30MINS/PULSE (MAX 1HR AND 30MINS, ADJ.). AT THE EXPIRATION OF THIS TIME, CONTROL OF THE ZONE SHALL AUTOMATICALLY RETURN TO THE SCHEDULE.

DUAL MAXIMUM AIRFLOW - HOT WATER REHEAT VALVE CONTROL:
1. WHEN THE ZONE IS IN THE COOLING MODE, THE COOLING LOOP OUTPUT IS MAPPED TO THE AIRFLOW SETPOINT FROM THE COOLING MAXIMUM TO THE MINIMUM AIRFLOW SETPOINTS. THE HOT WATER VALVE IS CLOSED.

2. WHEN THE ZONE IS IN THE DEADBAND MODE, THE AIRFLOW SETPOINT SHALL BE THE MINIMUM AIRFLOW SETPOINT. THE HOT WATER VALVE IS CLOSED.

3. WHEN THE ZONE IS IN THE HEATING MODE, THE HEATING LOOP SHALL MAINTAIN SPACE TEMPERATURE AT THE HEATING SETPOINT AS FOLLOWS:

- FROM 0%-50% LOOP SIGNAL, THE HEATING LOOP OUTPUT SHALL RESET THE DISCHARGE TEMPERATURE FROM SUPPLY AIR TEMPERATURE SETPOINT (E.G.,55°F) TO 95°F. NOTE THE UPPER TEMPERATURE IS LIMITED TO PREVENT STRATIFICATION DURING HEATING.
- FROM 50%-100% LOOP SIGNAL, THE HEATING LOOP OUTPUT SHALL RESET THE ZONE AIRFLOW SETPOINT FROM THE MINIMUM AIRFLOW SETPOINT TO THE MAXIMUM HEATING AIRFLOW SETPOINT. THE SUPPLY AIR DISCHARGE TEMPERATURE REMAINS AT 95°F.

4. THE HOT WATER VALVE SHALL BE MODULATED USING A PI CONTROL LOOP TO MAINTAIN THE DISCHARGE TEMPERATURE AT SETPOINT. NOTE THAT DIRECTLY CONTROLLING THE HOT WATER VALVE FROM THE ZONE TEMPERATURE PI LOOP IS NOT ACCEPTABLE SINCE IT SHALL NOT ALLOW SUPPLY AIR TEMPERATURE TO BE UNDER
CONTROL AND LIMITED IN TEMPERATURE TO PREVENT STRATIFICATION.

5. THE VAV DAMPER SHALL BE MODULATED TO MAINTAIN THE MEASURED AIRFLOW AT SETPOINT.

THE CONTROLLER SHALL MONITOR THE DISCHARGE AIR TEMPERATURE.

6. CO2 CONTROL - SPACE CO2 WILL BE MONITORED CONTINUOUSLY DURING OCCUPIED HOURS. UPON A RISE IN SPACE CO2 LEVEL ABOVE THE (ADJ) CO2 SETPOINT OF 1000 PPM, THE VAV BOX CONTROLLER SHALL MODULATE THE VAV BOX DAMPER OPEN TO INCREASE AIR-FLOW TO THE SPACE. IF VAV BOX CO2 MAXIMUM AIR FLOW (ADJ) IS REACHED AND SPACE CO2 LEVELS ARE STILL ABOVE SETPOINT THE CONTROLLER SHALL SEND A SIGNAL TO THE UPSTREAM VAV AIR HANDLER CONTROLLER TO MODULATE THE OUTSIDE AIR DAMPER OPEN.

ALARMS SHALL BE PROVIDED AS FOLLOWS:
HIGH ZONE TEMP: IF THE ZONE TEMPERATURE IS GREATER THAN THE COOLING SETPOINT BY 4°F (ADJ.).
LOW ZONE TEMP: IF THE ZONE TEMPERATURE IS LESS THAN THE HEATING SETPOINT BY 4°F (ADJ.).

VAV BOX WITH REHEAT & CO2 CONTROL DIAGRAM

4/8/2019 5:59:03 PM

IDENTIFICATION STAMP
DIV. OF THE STATE ARCHITECT
APP. 03-119458 INC:
REVIEWED FOR
SS ☑ FLS ☑ ACS ☑
DATE: 05/23/2019

DIVISION OF THE STATE ARCHITECT
355 South Grand Avenue, Suite 2100
Los Angeles, CA 90012
ph: (213) 897-3995 fx:(213) 897-3159

agency

tBP
architecture
planning
interiors

tBP/Architecture
4611 Teller Avenue
Newport Beach, CA 92660
ph: 949.673.0300 fx: 949.732.3895

architect

CAPITAL
ENGINEERING CONSULTANTS, INC.
LONG BEACH, CALIFORNIA
CM - RH/SL/TS 171221.00
PM - DESIGN TEAM PROJECT NO.

REGISTERED PROFESSIONAL ENGINEER
ROBERT V. HOMER
M 34011
Expires 9/30/19
MECHANICAL
STATE OF CALIFORNIA

DATE SIGNED: 04/05/19

consultant

COMPTON COLLEGE
INSTRUCTIONAL BUILDING No.2
COMPTON COMMUNITY COLLEGE DISTRICT
1111 E. ARTESIA BLVD. COMPTON, CA.

owner

tBP project number: 20998.00
file name:
drawn by: checked by:
date: 11 / 20 / 2018

rev:	date:	description:

THIS DRAWING AND THE DESIGNS, DEPICTIONS, IDEAS AND OTHER INFORMATION CONTAINED HEREIN CONSTITUTE UNPUBLISHED WORK OF tBP/ARCHITECTURE AND SHALL REMAIN PROPERTY OF tBP/ARCHITECTURE IN PERPETUITY. NO PART THEREOF SHALL BE REPRODUCED, DISCLOSED, DISTRIBUTED, SOLD, PUBLISHED OR OTHERWISE USED IN ANY WAY WITHOUT THE ADVANCED EXPRESS WRITTEN CONSENT OF tBP/ARCHITECTURE.

drawing title:
CONTROLS

drawing no.
M5-2
drawing of

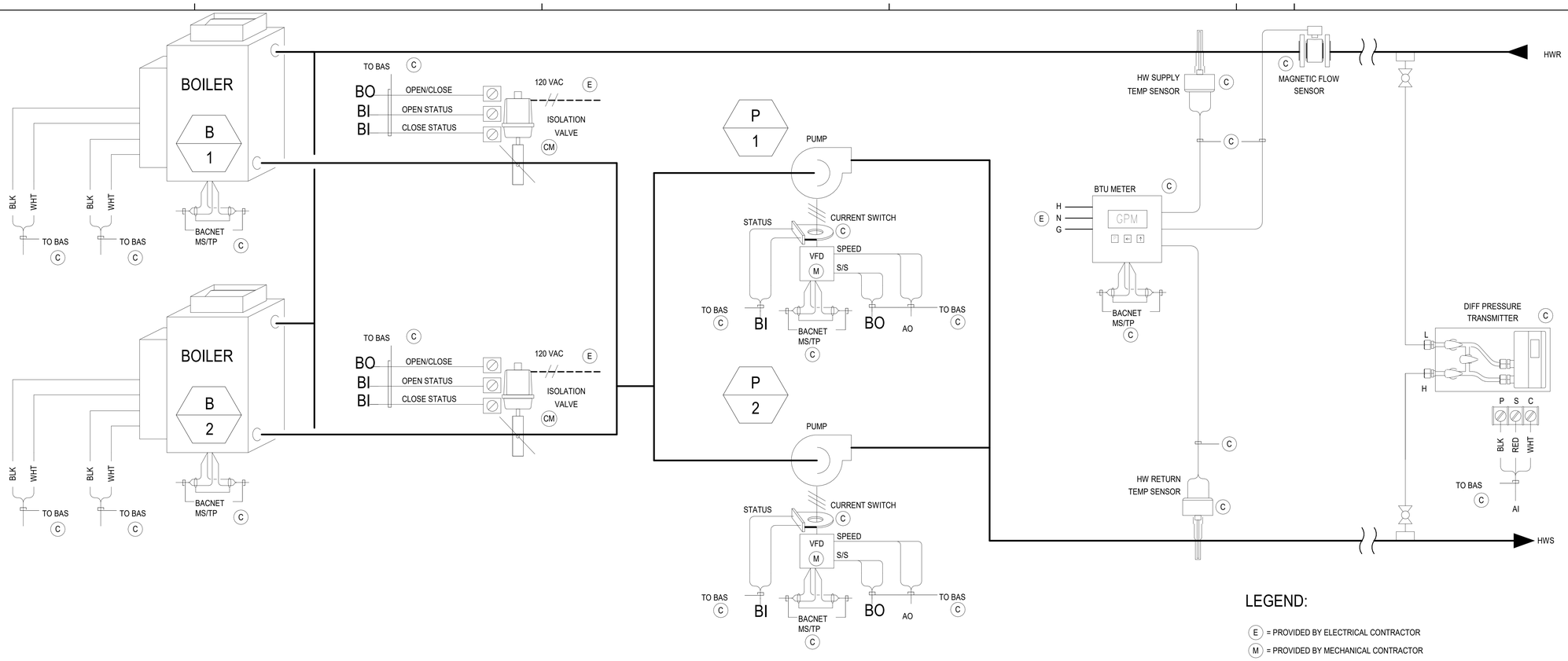

BOILER SYSTEM FLOW DIAGRAM

LEGEND:

(E) = PROVIDED BY ELECTRICAL CONTRACTOR
(M) = PROVIDED BY MECHANICAL CONTRACTOR
(C) = PROVIDED BY CONTROLS CONTRACTOR

LOW VOLTAGE DC WIRING
LINE VOLTAGE AC WIRING

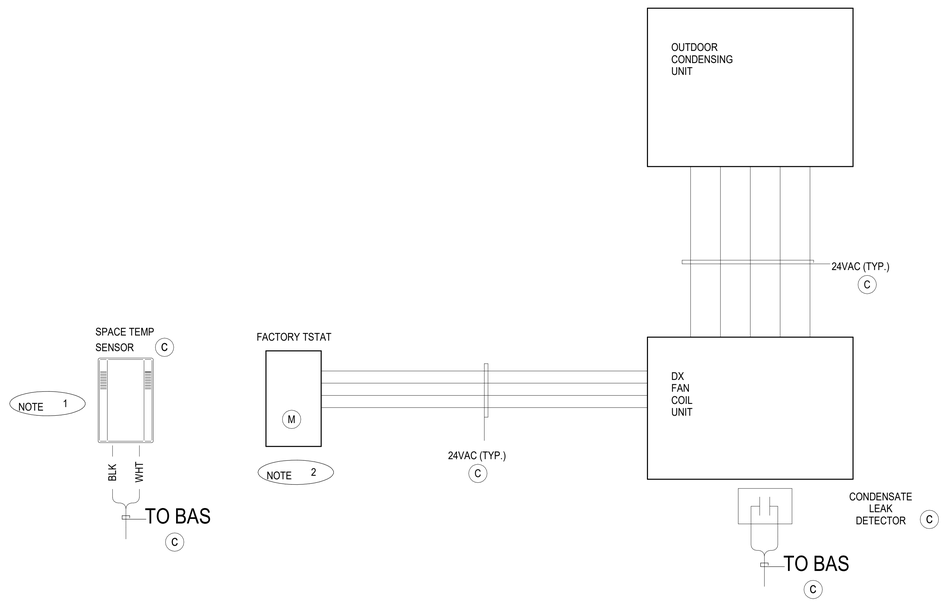

IT ROOM SPLIT DX FAN COIL CONTROL & MONITORING DIAGRAM

(TYPICAL)

NOTES:

1. SPACE TEMP SENSOR TO BE CONNECTED TO DDC CONTROLLER. ALARM ON HIGH TEMPERATURE.
2. SPACE THERMOSTAT FURNISHED BY UNIT MANUFACTURER.

LEGEND:

(E) = PROVIDED BY ELECTRICAL CONTRACTOR
(M) = PROVIDED BY MECHANICAL CONTRACTOR
(C) = PROVIDED BY CONTROLS CONTRACTOR

LOW VOLTAGE AC WIRING

IDENTIFICATION STAMP
DIV. OF THE STATE ARCHITECT
APP. 03-119458 INC:
REVIEWED FOR
SS ☑ FLS ☑ ACS ☑
DATE: 05/23/2019

DIVISION OF THE STATE ARCHITECT
355 South Grand Avenue, Suite 2100
Los Angeles, CA 90012
ph: (213) 897-3995 fx:(213) 897-3159

agency

tBP
architecture
planning
interiors

tBP/Architecture
4611 Teller Avenue
Newport Beach, CA 92660
ph: 949.673.0300 fx: 949.732.3895

architect

CAPITAL
ENGINEERING CONSULTANTS, INC.
LONG BEACH, CALIFORNIA

CM - RH/SL/TS — PM - DESIGN TEAM
171221.00 — PROJECT NO.

REGISTERED PROFESSIONAL ENGINEER
STEPHEN TORNER V. TE ECHEVERRIA
M 34011
EXPIRES 3/31/20
MECHANICAL
STATE OF CALIFORNIA

DATE SIGNED: 04/05/19

consultant

COMPTON COLLEGE
INSTRUCTIONAL BUILDING No.2

COMPTON COMMUNITY COLLEGE DISTRICT
1111 E. ARTESIA BLVD. COMPTON, CA.

owner

tBP project number: 20998.00
file name:
drawn by: checked by:
date: 11 / 20 / 2018

rev:	date:	description:

THIS DRAWING AND THE DESIGNS, DEPICTIONS, IDEAS AND OTHER INFORMATION CONTAINED HEREIN CONSTITUTE UNPUBLISHED WORK OF tBP/ARCHITECTURE AND SHALL REMAIN PROPERTY OF tBP/ARCHITECTURE IN PERPETUITY. NO PART THEREOF SHALL BE REPRODUCED, DISCLOSED, DISTRIBUTED, SOLD, PUBLISHED OR OTHERWISE USED IN ANY WAY WITHOUT THE ADVANCED EXPRESS WRITTEN CONSENT OF tBP/ARCHITECTURE.

drawing title:
CONTROLS

drawing no.
M5-3

drawing of

4/8/2019 5:59:04 PM

TRANSFER DUCT SCHEDULE

NAME	CFM	SIZE
TD-1	1200	20X20
TD-2	1000	18X18
TD-3	800	16X16
TD-4	600	14X14
TD-5	400	12X12
TD-6	200	8X8

FIRE DAMPERS SHALL BE STATE FIRE MARSHAL APPROVED AND INSTALLED STRICTLY IN ACCORDANCE WITH THE MANUFACTURER'S INSTRUCTIONS. MANUFACTURER'S INSTRUCTIONS SHALL BE MADE AVAILABLE TO THE INSPECTING AUTHORITY. DETAILS SHOWN ARE FOR REFERENCE ONLY.

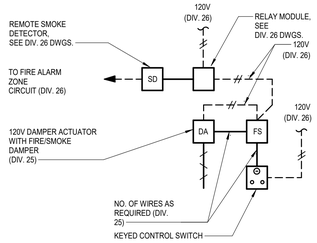

NOTES :

1. INSTALLATION SHALL BE PER THE DAMPER MANUFACTURER'S U.L. LISTING FOR DAMPER IN THE PLANE OF THE WALL AND ACTUATOR OUTSIDE OF THE DUCT. MANUFACTURER SHALL PROVIDE ALL COMPONENTS NECESSARY TO INSTALL THE DAMPERS PER THIS REQUIREMENT.

2. WIRE TO CLOSE DAMPER UPON SENSING OF SMOKE IN AIR STREAM, FOR WIRING DIAGRAM SEE ABOVE. PROVIDE ALL WIRING, CONDUIT, RELAYS, ETC. REQUIRED TO RENDER SYSTEM COMPLETE.

3. PROVIDE UNIT RELAY LISTED FOR USE WITH SMOKE DETECTORS TO CUT POWER TO UNIT CONTROLS TO SHUTDOWN FAN OPERATION WHEN FIRE/SMOKE DAMPER DETECTOR IN DUCT SERVED BY AC IS ENERGIZED, FAN SHUTDOWN SHALL BE PER 2013 CMC 606.8.

TRANSFER DUCT SCHEDULE
SCALE NONE 11

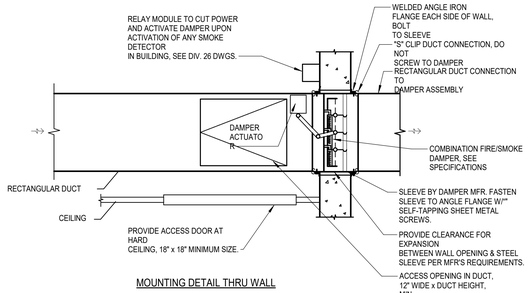

MOUNTING DETAIL THRU WALL

COMBINATION FIRE/SMOKE DAMPER DETAIL
SCALE NONE 5

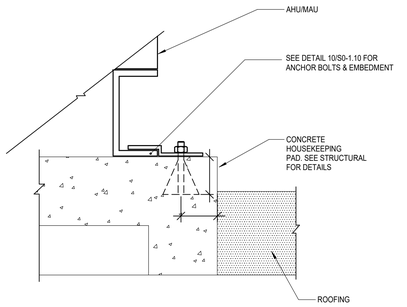

AHU MOUNTING DETAIL
SCALE NONE 1

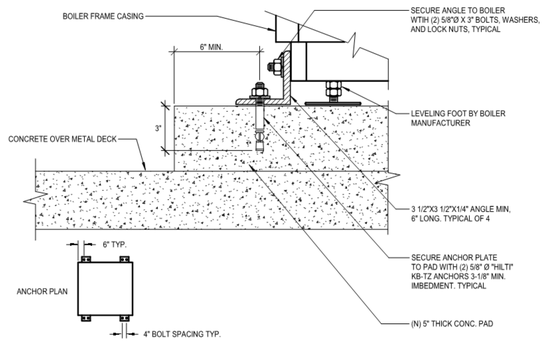

BOILER MOUNTING
SCALE 1" = 1'-0" 9

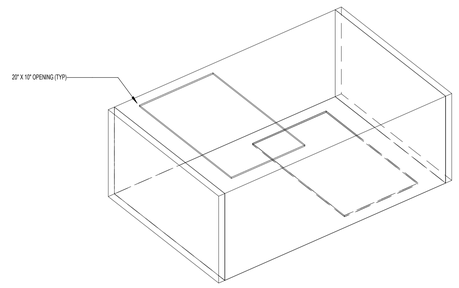

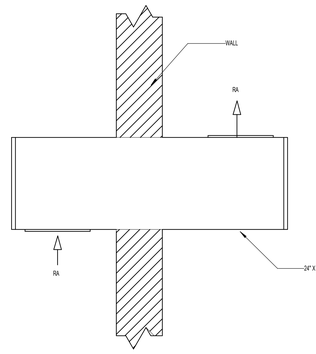

TRANSFER DUCT DETAIL
SCALE NTS 6

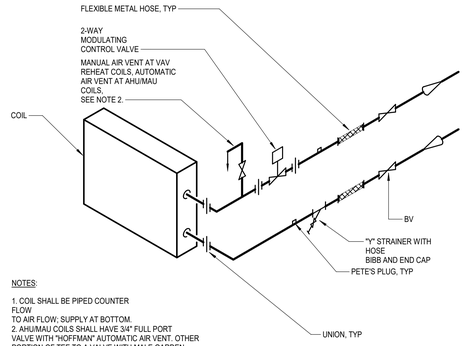

NOTES:

1. COIL SHALL BE PIPED COUNTER FLOW TO AIR FLOW; SUPPLY AT BOTTOM.
2. AHU/MAU COILS SHALL HAVE 3/4" FULL PORT VALVE WITH "HOFFMAN" AUTOMATIC AIR VENT. OTHER PORTION OF TEE TO A VALVE WITH MALE GARDEN HOSE FITTING AND CAP, ALL IN BRASS OR BRONZE.

CHW & HHW COIL PIPING DETAIL

CHW & HHW COIL PIPING DETAIL (2-WAY)
SCALE NONE 2

NOTES REMOVED. SEE SEISMIC DESIGN CRITERIA BELOW, THIS SHEET.

NOTES:

1. VERIFY ACTUAL MOUNTING & CLEARANCE REQUIREMENTS WITH EQUIPMENT MANUFACTURER.
2. MAINTAIN 42" MINIMUM CLEARANCE IN FRONT OF VFD.
3. DIMENSIONS AND WEIGHT ON DETAIL REPRESENT WORSE CASE SCENARIO BETWEEN EACH VFD.

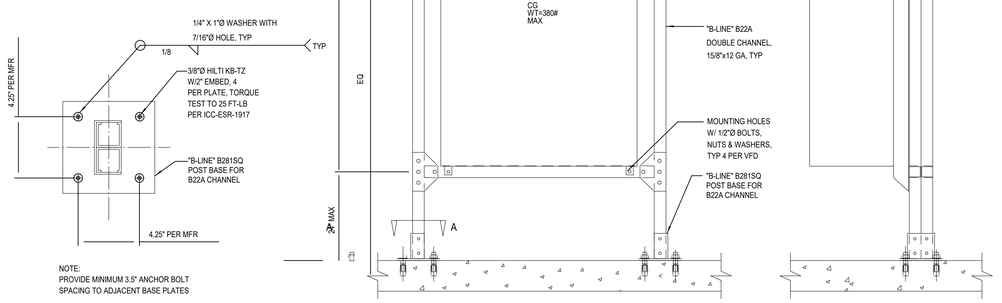

SINGLE VFD MNTG
SCALE 12" = 1'-0" 10

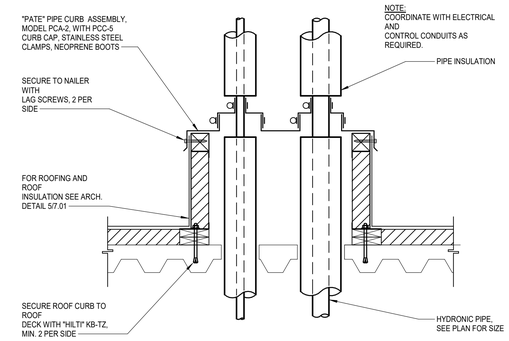

PIPE THRU ROOF
SCALE 1" = 1'-0" 7

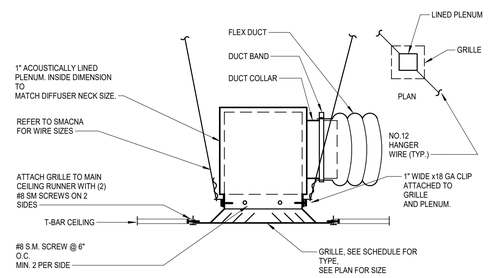

LAY-IN DIFFUSER/GRILLE MOUNTING
SCALE NONE 3

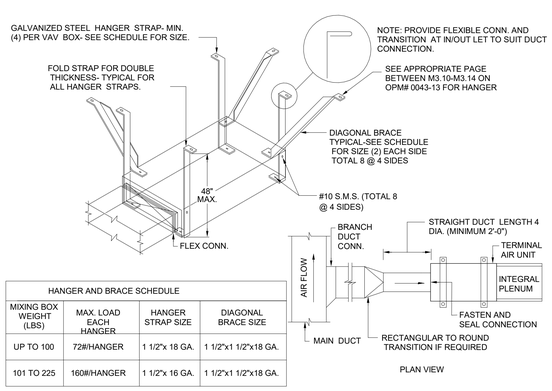

HANGER AND BRACE SCHEDULE			
MIXING BOX WEIGHT (LBS)	MAX. LOAD EACH HANGER	HANGER STRAP SIZE	DIAGONAL BRACE SIZE
UP TO 100	72#/HANGER	1 1/2"x 18 GA.	1 1/2"x1 1/2"x18 GA.
101 TO 225	160#/HANGER	1 1/2"x 16 GA.	1 1/2"x1 1/2"x18 GA.

TERMINAL UNIT MOUNTING DETAIL
SCALE NTS 8

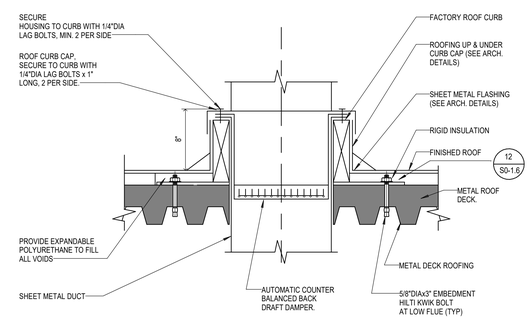

DUCT THROUGH ROOF
SCALE NONE 4

IDENTIFICATION STAMP
DIV. OF THE STATE ARCHITECT
APP. 03-119458 INC:
REVIEWED FOR
SS ☑ FLS ☑ ACS ☑
DATE:05/23/2019

DIVISION OF THE STATE ARCHITECT
355 South Grand Avenue, Suite 2100
Los Angeles, CA 90012
ph: (213) 897-3995 fx:(213) 897-3159
agency

tBP
architecture
planning
interiors

tBP/Architecture
4611 Teller Avenue
Newport Beach, CA 92660
ph: 949.673.0300 fx: 949.732.3895
architect

CAPITAL
ENGINEERING CONSULTANTS, INC.
LONG BEACH, CALIFORNIA
CM - RH/SL/TS 171221.00
PM - DESIGN TEAM PROJECT NO.

REGISTERED PROFESSIONAL ENGINEER
ROBERT V. HOLCOMB
M 34011
EXPIRES 9/30/19
MECHANICAL
STATE OF CALIFORNIA
DATE SIGNED: 04/05/19
consultant

COMPTON COLLEGE
INSTRUCTIONAL BUILDING No.2
COMPTON COMMUNITY COLLEGE DISTRICT
1111 E. ARTESIA BLVD. COMPTON, CA.
owner

tBP project number: 20998.00
file name:
drawn by: checked by:
date: 11 / 20 / 2018

rev:	date:	description:

THIS DRAWING AND THE DESIGNS, DEPICTIONS, IDEAS AND OTHER INFORMATION CONTAINED HEREIN CONSTITUTE UNPUBLISHED WORK OF tBP/ARCHITECTURE AND SHALL REMAIN PROPERTY OF tBP/ARCHITECTURE IN PERPETUITY. NO PART THEREOF SHALL BE REPRODUCED, DISCLOSED, DISTRIBUTED, SOLD, PUBLISHED OR OTHERWISE USED IN ANY WAY WITHOUT THE ADVANCED EXPRESS WRITTEN CONSENT OF tBP.

drawing title:
DETAILS

drawing no.
M7-1
drawing of

4/8/2019 5:59:05 PM

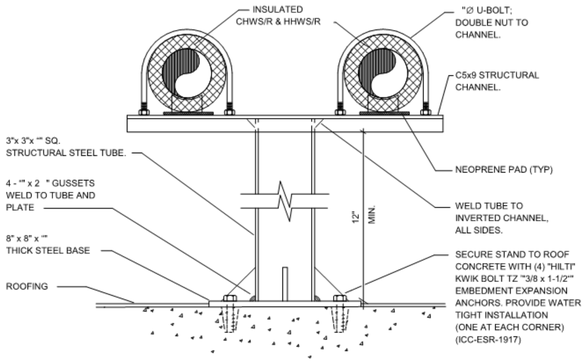

PIPE ON ROOF SUPPORT 8

SCALE 12" = 1'-0"

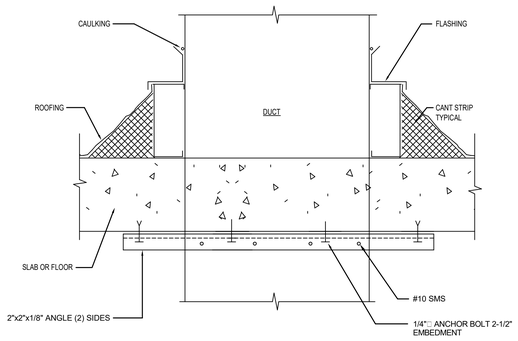

DUCT THRU ROOF DETAIL 4

SCALE NONE

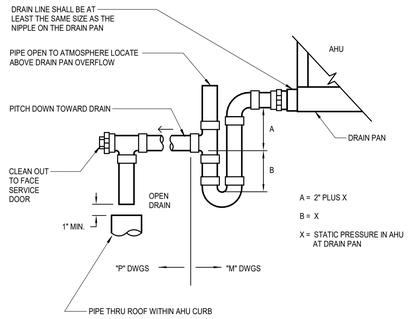

CONDENSATE DRAIN CONNECTION 1

SCALE NONE

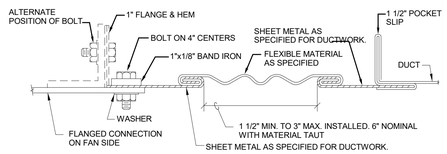

RECTANGULAR FLEXIBLE CONNECTION

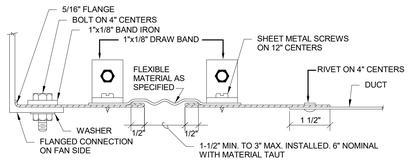

ROUND FLEXIBLE CONNECTION

FLEXIBLE DUCT CONNECTION DETAIL 9

SCALE NONE

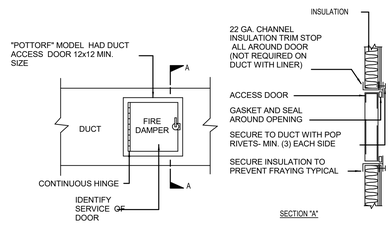

DUCT ACCESS DOOR DETAIL 5

SCALE NONE

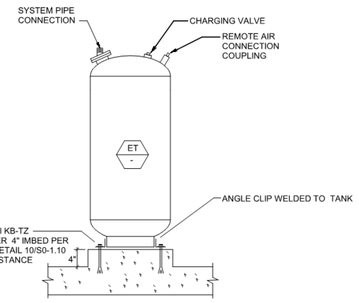

EXPANSION TANK MOUNTING DETAIL 2

SCALE NONE

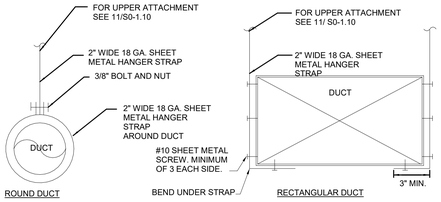

NOTE:
1. APPLICABLE FOR DUCTWORK LESS THAN 6 SQ.FT.

RETANGULAR DUCT			ROUND DUCT		
MAX. OF DUCT PERIMETER (INCH)	STRAP	MAX. LOAD EACH HANGER (LBS.)	DIAMETER (INCHES)	STRAP	MAX. LOAD EACH HANGER (LBS.)
P/2 =72	1"X 20 GA.	20	UP TO 20"	1"X 20 GA.	20
P/2 =96	1"X 18 GA.	30	21" TO 36"	1"X 18 GA.	30

DUCT HANGER AND SUPPORT DETAIL 6

SCALE NONE

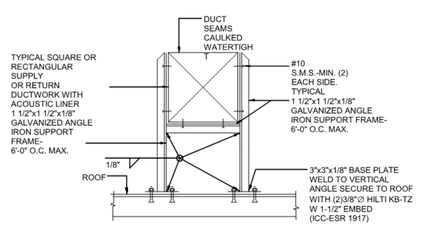

DUCT SUPPORT ON ROOF DETAIL 7

SCALE NONE

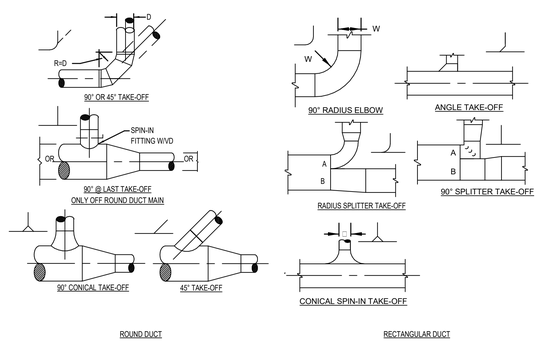

NOTES:
1. SINGLE-LINE ILLUSTRATIONS ARE SYMBOLS USED ON DRAWINGS.
2. SIZE A & B DIMENSIONS IN PROPORTION TO AIR QUANTITIES IN EACH LEGS OF SPLIT UNLESS OTHERWISE NOTED.

BRANCH DUCT DETAIL 3

SCALE NONE

4/8/2019 5:59:06 PM

IDENTIFICATION STAMP
DIV. OF THE STATE ARCHITECT
APP. 03-119458 INC:
REVIEWED FOR
SS ☑ FLS ☑ ACS ☑
DATE:05/23/2019

DIVISION OF THE STATE ARCHITECT
355 South Grand Avenue, Suite 2100
Los Angeles, CA 90012
ph: (213) 897-3995 fx:(213) 897-3159
agency

tBP
architecture
planning
interiors

tBP/Architecture
4611 Teller Avenue
Newport Beach, CA 92660
ph: 949.673.0300 fx: 949.732.3895
architect

CAPITAL
ENGINEERING CONSULTANTS, INC.
LONG BEACH, CALIFORNIA
CM - RH/SL/TS PM - DESIGN TEAM
171221.00 PROJECT NO.
DESIGNER
M 34011
EXPIRES 9/30/20
MECHANICAL
STATE OF CALIFORNIA
DATE SIGNED: 04/05/19
consultant

COMPTON COLLEGE
INSTRUCTIONAL BUILDING No.2
COMPTON COMMUNITY COLLEGE DISTRICT
1111 E. ARTESIA BLVD. COMPTON, CA.
owner

tBP project number: 20998.00
file name:
drawn by: checked by:
date: 11 / 20 / 2018

rev:	date:	description:

THIS DRAWING AND THE DESIGNS, DEPICTIONS, IDEAS AND OTHER INFORMATION CONTAINED HEREIN CONSTITUTE UNPUBLISHED WORK OF tBP/ARCHITECTURE AND SHALL REMAIN PROPERTY OF tBP/ARCHITECTURE IN PERPETUITY. NO PART THEREOF SHALL BE REPRODUCED, DISCLOSED, DISTRIBUTED, SOLD, PUBLISHED OR OTHERWISE USED IN ANY WAY WITHOUT THE ADVANCED EXPRESS WRITTEN CONSENT OF tBP/ARCHITECTURE.

drawing title:
DETAILS

drawing no.
M7-2
drawing of

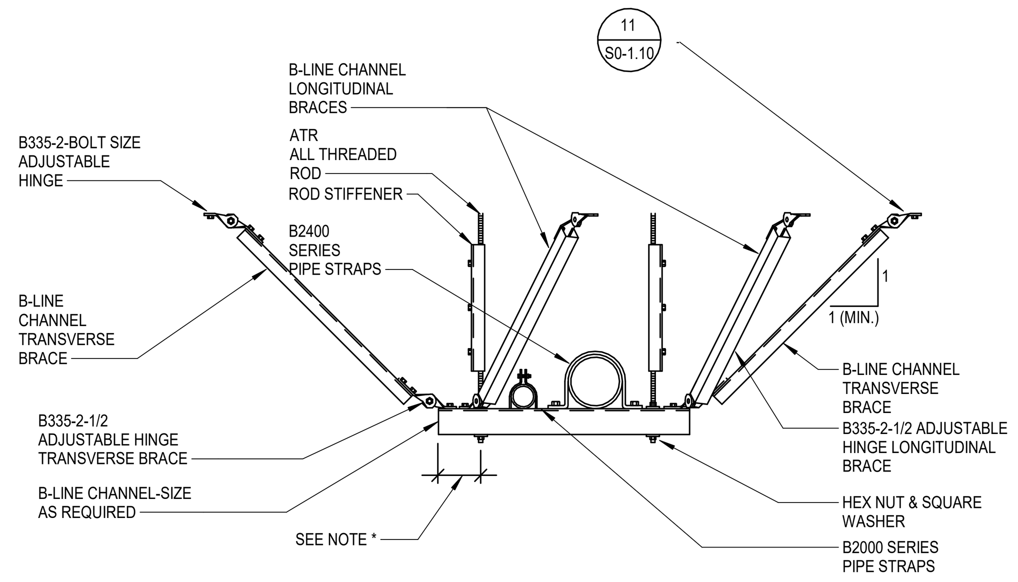

NOTES:

1). B335-2 ADJUSTABLE HINGES FOR LONGITUDINAL BRACES MAY BE ATTACHED ON EITHER SIDE ADJACENT TO THE ALL THREAD ROD, OR ATTACHED TO THE ALL THREAD ROD ITSELF.

2). B335-2 ADJUSTABLE HINGES FOR TRANSVERSE BRACES MAY BE ATTACHED TO THE ALL THREAD ROD.

3). TWO B335-2 ADJUSTABLE HINGES MAY BE ATTACHED TO THE STRUT TRAPEZE USING THE SAME BOLT OR ALL THREAD ROD.

4). IT IS NOT NECESSARY TO INSTALL BOTH TRANSVERSE BRACES AND LONGITUDINAL BRACES ON THE SAME TRAPEZE SUPPORT. EITHER SET OF BRACES MAY BE REMVOED TO FORM A LONGITUDINAL BRACE ONLY OR A TRANSVERSE BRACE ONLY IF DESIRED.

5). LONGITUDINAL BRACES, WHEN NEEDED, MUST BE INSTALLED AT BOTH ENDS OF TRAPEZE.

6). THE EQUIPMENT SHOWN ON THIS TRAPEZE SUPPORT IS GENERICIN NATURE. ANY NUMBER OF PIPES, CONDUITS, DUCTWORK OR CABLE TRAY MAY BE SUPPORTED FOLLOWING THE SYSTEM WEIGHT AND SUPPORT SPANS LISTED IN APPENDIX 2 - TABLE 1.

* DETERMINE LENGTH OF TRAPEZE, MAKING SURE SUFFICIENT LENGTH IS ADDED TO ATTACH THE ALL THREAD ROD AND BRACING ATTACHMENTS.

TRAPEZE BRACING (8)

SCALE 1" = 1'-0"

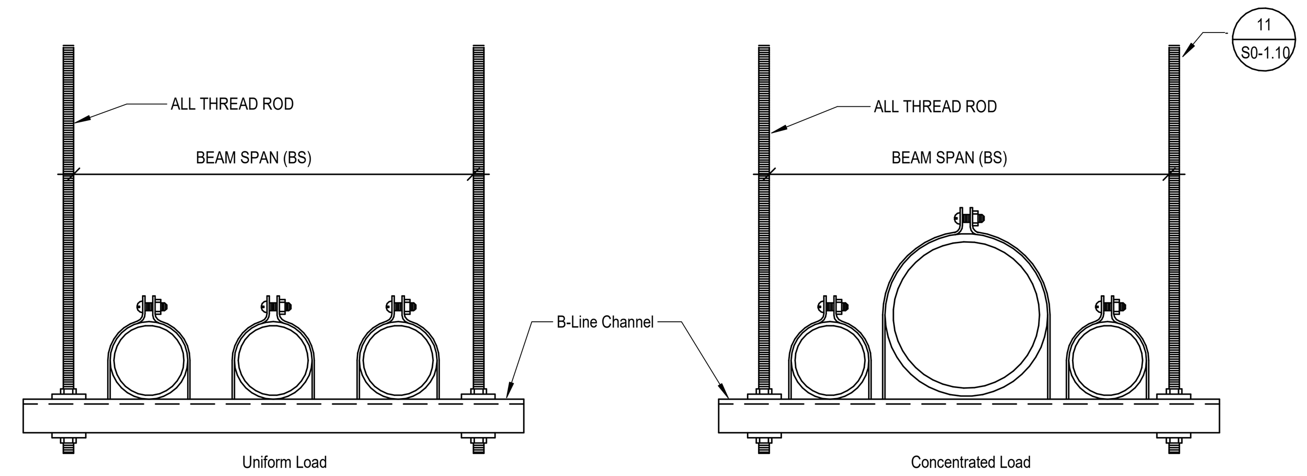

Beam Span (BS)		Channel Type & Uniform Beam Load Rating													
		B22SH		B22		B22A		B12		B12A*		B11		B11A*	
In.	(mm)	Lbs.	(kN)	Lbs.	(kN)	Lbs.	(kN)	Lbs.	(kN)	Lbs.	(kN)	Lbs.	(kN)	lbs.	(kN)
12"	(305)	2553	(11.35)	2837	(12.62)	8165	(36.32)	5498	(24.45)	3259	(14.49)	4395	(19.54)	4309	(19.16)
24"	(610)	1276	(5.68)	1418	(6.31)	4083	(18.16)	2750	(12.23)	3259	(14.49)	4395	(19.54)	4309	(19.16)
36"	(914)	851	(3.78)	946	(4.21)	2722	(12.11)	1833	(8.15)	3259	(14.49)	2930	(13.03)	4309	(19.16)
48"	(1219)	638	(2.84)	709	(3.15)	2042	(9.08)	1374	(6.11)	3259	(14.49)	2197	(9.77)	4309	(19.16)
60"	(1524)	511	(2.27)	568	(2.52)	1633	(7.26)	1100	(4.89)	3231	(14.37)	1758	(7.82)	4309	(19.16)
72"	(1829)	426	(1.89)	473	(2.10)	1361	(6.05)	916	(4.07)	2693	(11.98)	1465	(6.51)	4309	(19.16)
84"	(2133)	365	(1.62)	405	(1.80)	1167	(5.19)	785	(3.49)	2308	(10.26)	1256	(5.58)	3824	(17.01)
96"	(2438)	319	(1.42)	354	(1.57)	1021	(4.54)	687	(3.05)	2019	(8.98)	1011	(4.49)	3346	(14.88)
108"	(2743)	284	(1.26)	315	(1.40)	908	(4.04)	611	(2.72)	1795	(7.98)	977	(4.34)	2974	(13.23)
120"	(3048)	255	(1.13)	283	(1.26)	817	(3.63)	550	(2.44)	1616	(7.19)	879	(3.91)	2677	(11.91)

- Loads shown in chart have a safety factor of 2
- Based on a uniformly loaded simple span with adequate lateral bracing using an allowable stress of 21,000 psi (144.7 MPa)
- To determine concentrated load capacity at mid-span, multiply the uniform load by 0.5.
- Use 90% of the solid channel loads for corresponding SH and SHA channels.
- These back to back channels are mig welded.

Structure Connection Type	Channel type and maximum beam span for longitudinal beam loading													
	B22SH		B22		B22A		B12		B12A*		B11		B11A*	
	in.	(mm)	in.	(mm)	in.	(mm)	in.	(mm)	in.	(mm)	in.	(mm)	in.	(mm)
I	176	(4470)	196	(4978)	391	(9931)	276	(7010)	552	(14021)	357	(9068)	714	(18135)
II	103	(2616)	114	(2895)	228	(5791)	161	(4089)	322	(8179)	208	(5283)	416	(10566)
III	68	(1727)	76	(1930)	152	(3861)	107	(2718)	215	(5461)	139	(3530)	278	(7061)
IV	46	(1168)	51	(1295)	101	(2565)	72	(1829)	143	(3632)	93	(2362)	185	(4699)
V	32	(813)	35	(889)	70	(1778)	50	(1270)	99	(2514)	64	(1625)	128	(3251)

TRAPEZE TABLES (5)

SCALE 1" = 1'-0"

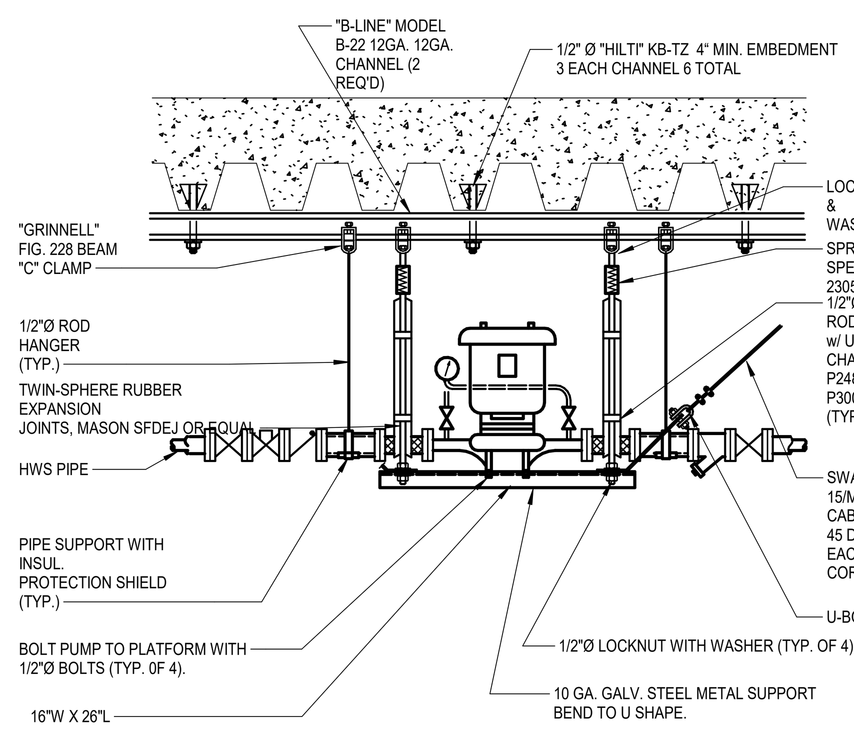

INLINE PUMP DETAIL (9)

SCALE 1" = 1'-0"

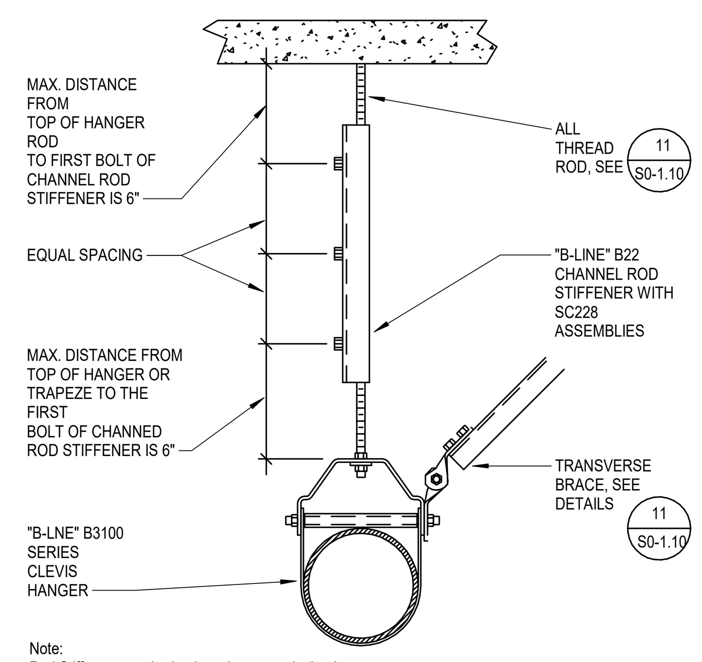

Note:
Rod Stiffeners required only on hanger rods that have seismic bracing attached to the hanger or trapeze.

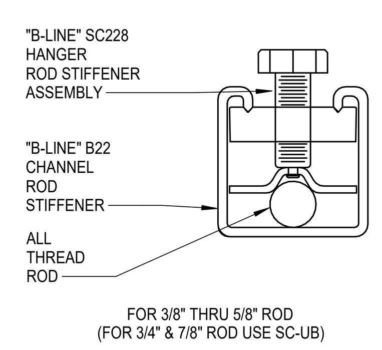

FOR 3/8" THRU 5/8" ROD
(FOR 3/4" & 7/8" ROD USE SC-UB)

ROD STIFFENER CHART

ATR Size	Max. Rod Length Without Rod Stiffener	
	In.	(mm)
3/8"-16	19"	(482.6)
1/2"-13	25"	(635.0)
5/8"-11	31"	(787.4)
3/4"-10	37"	(939.8)
7/8"-9	43"	(1092.2)

Note:
Minimum of (2)-SC228 or SC-UB are required per rod.
DETAIL FROM "B-LINE" SEISMIC RESTRAINTS SYSTEM, OSHPD PRE-APPROVAL No. OPA-0114.

ROD STIFFENER (6)

SCALE 1" = 1'-0"

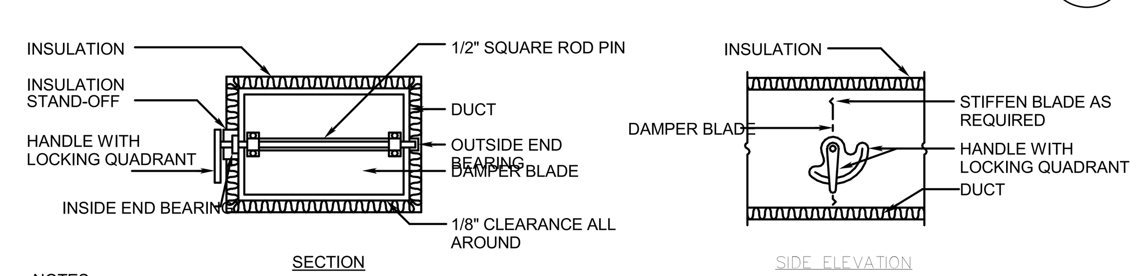

NOTES:

1. DELETE INSULATION STAND-OFF ON DUCTWORK WITHOUT EXTERIOR INSULATION.
2. DETAIL SHOWS SINGLE BLADE DAMPER. DAMPER INSTALLATION SHALL BE SIMILAR FOR MULTI-BLADE DAMPERS AND ROUND DAMPERS.
3. FOR DUCT OVER 12" IN HIGH, DAMPER SHALL BE MULTI-BLADE OPPOSED-BLADE TYPE.

RECTANGULAR DUCT

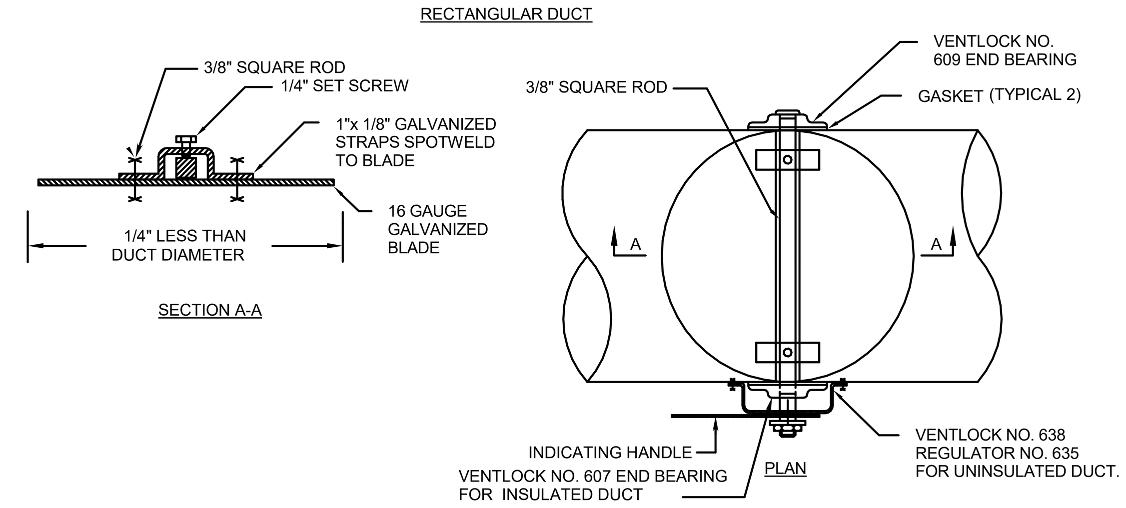

ROUND DUCT

NOTES:

1. FOR INACCESBLE CONDITION OR CEILING SPACE FOR DAMPER ADJUSTMENT AND BALANCING. PROVIDE AND INSTALL A YOUNG REGULATOR REMOTE CABLE SYSTEM OR ACCESS DOOR ABOVE THE VOLUME DAMPER.

MANUAL VOLUME DAMPER DETAIL (7)

SCALE 12" = 1'-0"

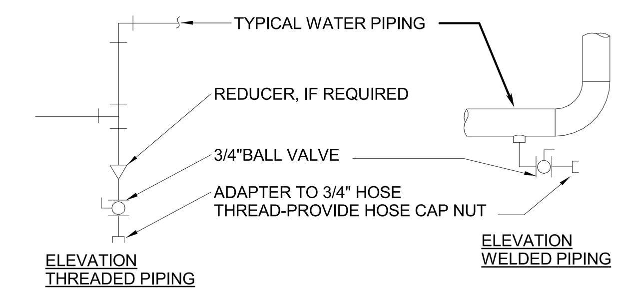

HOT WATER PIPING DRAIN VALVE CONNECTIONS

NOTES:
1. DRAIN ALL LOW POINTS AS INDICATED ABOVE.
2. WHERE SCALE POCKETS ARE SHOWN ON PIPE RISER DIAGRAMS AND/OR PLANS LOCATE DRAIN AT BOTTOM OF SCALE POCKET.

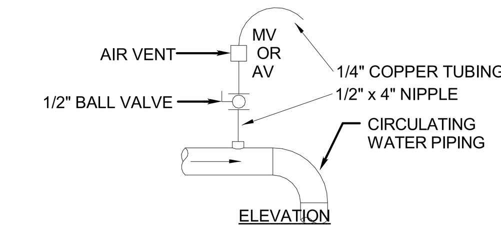

TYPICAL MANUAL AIR VENT

NOTES:
1. VENT ALL HIGH POINTS INDICATED ABOVE.
2. IF AUTOMATIC AIR VENTS ARE USED, PIPE DISCHARGE TO DRAIN.

DRAIN VALVE AND AIR VENT CONNECTON DETAIL (1)

SCALE 12" = 1'-0"

1.) ROD MEETS ASTM A307 SPECIFICATIONS.

2.) THIS SEISMIC HANGER COMPONENT HAS BEEN TESTED FOR SEISMIC APPLICATION.

3.) THIS COMPONENT CANNOT BE REPLACED BY ANY OTHER COMPONENT, OSHPD APPROVED OR OTHERWISE, UNLESS TESTED PER SECTION 2, 4, 6 AND 8 USING TOLCO SEISMIC COMPONENTS.

4.) DESIGN LOAD (ASD) VALUES FROM MSS SP-58 (2009), TABLE 4 AND ARE INTENDED FOR USE IN DETERMINING VERTICAL HANGER SPACING WHEN CALCULATING MAXIMUM TRANSVERSE SPACING.

5.) SEISMIC CAPACITY GOVERNED BY ASSEMBLY. SEE SECTION 2 THRU 8 FOR APPROVED ASSEMBLIES.

NOT USED (2)

SCALE 1" = 1'-0"

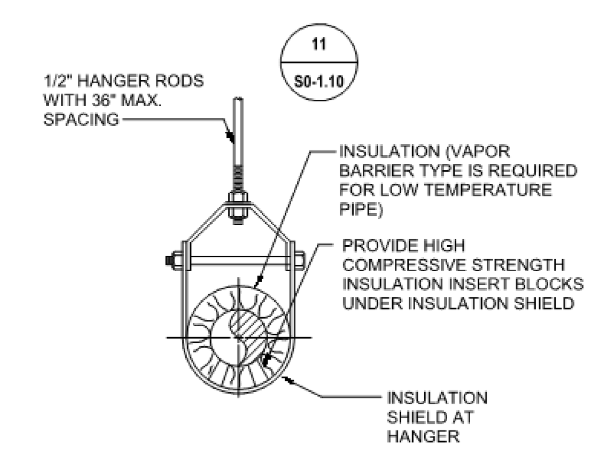

ADJUSTABLE CLEVIS HANGER
TYPE 1 IN SPECIFICATIONS

PIPE HANGER AND SUPPORT DETAIL (3)

SCALE 12" = 1'-0"

DETAIL NOTES	
1.	THE MAXIMUM ANNULAR SPACE TO BE FILLED IS 2". THE MINIMUM ANNULAR SPACE IS 3/4". THE MAXIMUM PIPE SIZE IS A NOMINAL 4".
2.	FOR SOLID CONCRETE WALLS, 3M/CP 25 CAULK MAY BE CENTERED IN THE WALL WITH DAMMING MATERIAL ON BOTH SIDES OF THE CAULK.
3.	USE CP 25S/L(SELF LEVELING) CAULK ON HORIZONTAL SURFACES WHEN SEALING OPENING FROM ABOVE THE PENETRATION. USE CP25N (NO SAG) CAULK ON VERTICAL SURFACES AND ON HORIZONTAL SURFACES WHEN SEALING OPENINGS FROM BELOW. USE CP 25WB CAULK ON EITHER APPLICATION.
4.	SHRINKAGE OF CP 25 CAULKS IS ACCEPTABLE AFTER INITIAL WET DEPTH INSTALLATION.
5.	THE DEPTH OF THE CP 25 CAULKS DEPENDS ON THE INSULATION THICKNESS. CAULK DEPTH (MIN.) INSULATION 1" 1"THICK 2" 2"-3" THICK
6.	IF WATER PIPE IS INSULATED, CAULK PIPE OUTSIDE OF PIPE INSULATION.

SYSTEM #W-L-1001 FOR UNISULATED PIPE. SYSTEM #W-L-5001 FOR INSULATED PIPE.

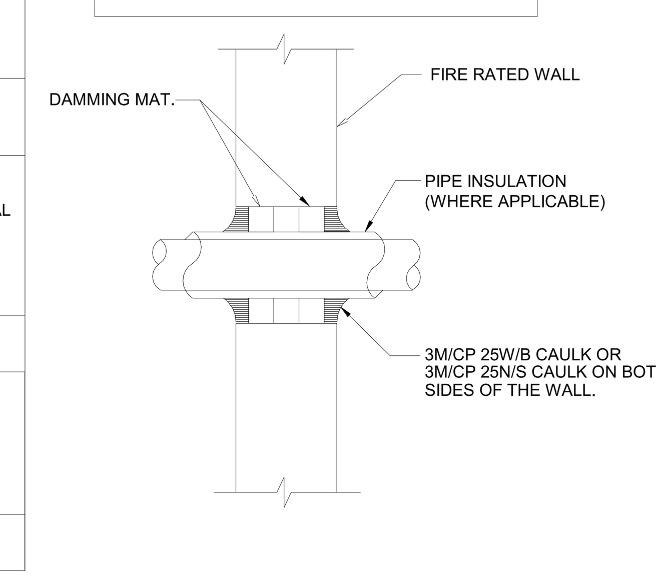

FIRE RATED PIPE PENETRATION (11)

SCALE 12" = 1'-0"

IDENTIFICATION STAMP
DIV. OF THE STATE ARCHITECT
APP. 03-119458 INC:
REVIEWED FOR
SS ☑ FLS ☑ ACS ☑
DATE:05/23/2019

DIVISION OF THE STATE ARCHITECT
355 South Grand Avenue, Suite 2100
Los Angeles, CA 90012
ph: (213) 897-3995 fx:(213) 897-3159
agency

tBP architecture planning interiors
tBP/Architecture
4611 Teller Avenue
Newport Beach, CA 92660
ph: 949.673.0300 fx: 949.732.3895
architect

CAPITAL ENGINEERING CONSULTANTS, INC.
LONG BEACH, CALIFORNIA
CM - RH/SL/TS 171221.00
PM - DESIGN TEAM PROJECT NO.

REGISTERED PROFESSIONAL ENGINEER CHRISTOPHER V. MERCURIO M 34011 EXPIRES 3/30/20 MECHANICAL STATE OF CALIFORNIA
DATE SIGNED: 04/05/19
consultant

COMPTON COLLEGE
INSTRUCTIONAL BUILDING No.2
COMPTON COMMUNITY COLLEGE DISTRICT
1111 E. ARTESIA BLVD. COMPTON, CA.
owner

tBP project number: 20998.00
file name:
drawn by: checked by:
date: 11 / 20 / 2018
rev: date: description:

THIS DRAWING AND THE DESIGNS, DEPICTIONS, IDEAS AND OTHER INFORMATION CONTAINED HEREIN CONSTITUTE UNPUBLISHED WORK OF tBP/ARCHITECTURE AND SHALL REMAIN PROPERTY OF tBP/ARCHITECTURE IN PERPETUITY. NO PART THEREOF SHALL BE REPRODUCED, DISCLOSED, DISTRIBUTED, SOLD, PUBLISHED OR OTHERWISE USED IN ANY WAY WITHOUT THE ADVANCED EXPRESS WRITTEN CONSENT OF tBP/ARCHITECTURE.

drawing title:
DETAILS

drawing no.
M7-3
drawing of

4/8/2019 5:59:08 PM

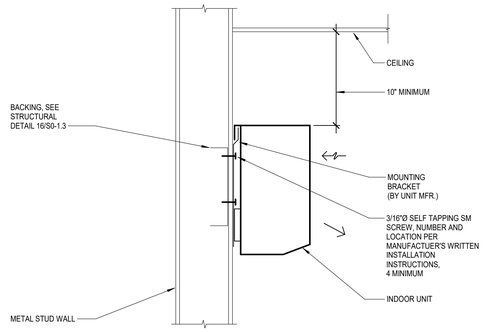

SPLIT SYSTEM FAN COIL UNIT MOUNTING 6

SCALE 1" = 1'-0"

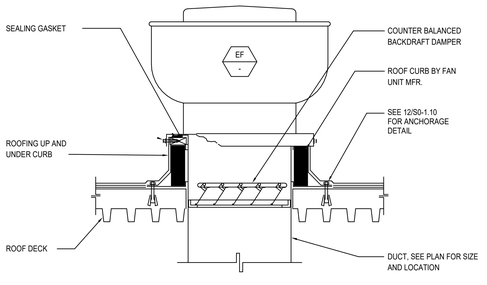

EXHAUST FANS MOUNTING 7

SCALE NONE

NOTES:

1. VERIFY ACTUAL MOUNTING & CLEARANCE REQUIREMENTS WITH EQUIPMENT MANUFACTURER.
2. MAINTAIN 42" MINIMUM CLEARANCE IN FRONT OF VFD.
3. DIMENSIONS AND WEIGHT ON DETAIL REPRESENT WORSE CASE SCENARIO BETWEEN EACH VFD.

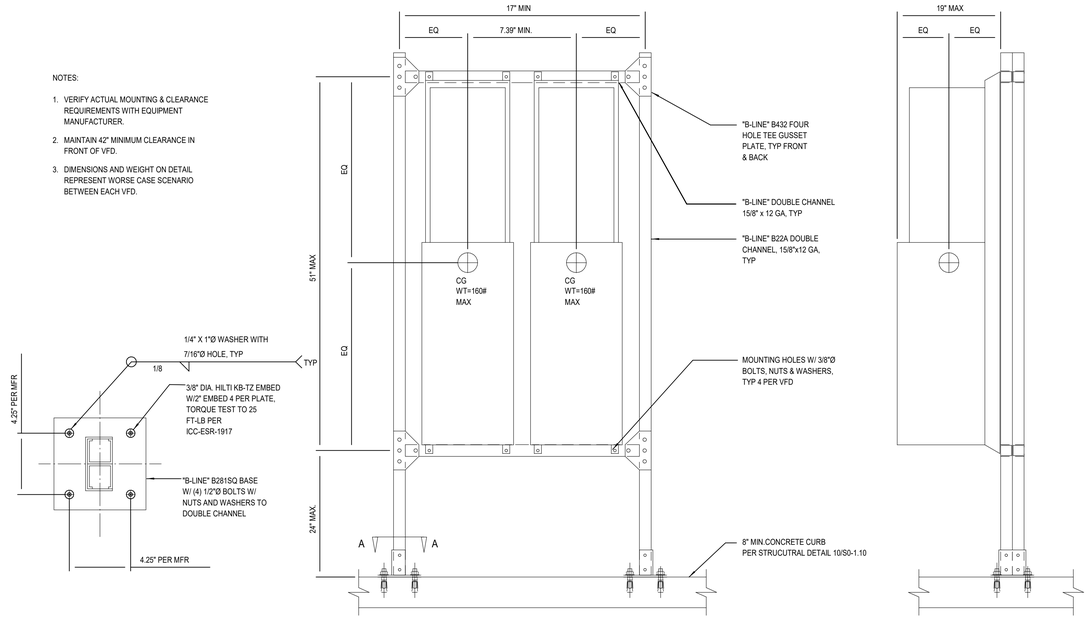

NOTE:
CONDITION WITH RACK SUPPORTING ONLY ONE VFD IS SIMILAR.

MULTI VFD MOUNTING 1

SCALE 12" = 1'-0"

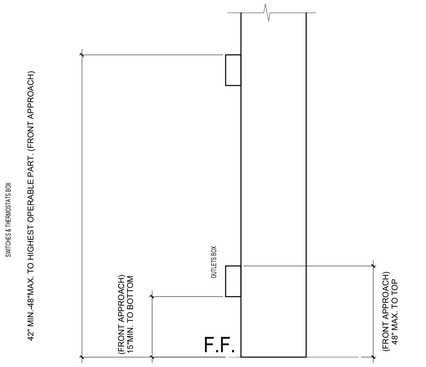

ELECTRICAL MOUNTAIN HEIGHTS 2

SCALE 12" = 1'-0"

MASON INDUSTRIES, Inc.
Manufacturers of Vibration Control Products
350 Rabro Drive, Hauppauge, NY 11788, 516/348-0282, FAX 516/348-0279
2101 W. Crescent Ave., Suite D, Anaheim, CA 92801, 714/535-2727, FAX 714/535-5738

CERTIFIED FOR
JOB NAME: COMPTON COLLEGE IB#2
CUSTOMER: CAPITAL ENGINEERING
CUSTOMER P.O.: JOB NO.:
MASON E.O.: 31784 DWG. NO.: WF-31784-01
REQUIRED: (1) TAG: P-3

TYPE BMK/KSL BOLTED MODULAR CONCRETE INERTIA BASE

MANUF. BELL & GOSSETT
SIZE 2.5X2 MODEL e-80
BASE NUMBER
PUMP TYPE: [ ] CLOSE COUPLED [X] END SUCTION [ ] DOUBLE SUCTION
SUCTION SIZE 2.5" | 1 SIZE 1.5 MOTOR H.P. | 145T FRAME SIZE | 1800 R.P.M.
WEIGHTS: STEEL BASE 72 lbs. EQUIPMENT 155 lbs. BASE w/ CONCRETE 672 lbs. TOTAL 827 lbs.
FOR SPRING MOUNT DATA SEE: WF-31784-01A
FOR SNUBBER DATA SEE: WF-31784-01B
2.0" SPECIFIED DEFLECTION

Typical Base Layout- For Actual Locations See Plan View Below.

ANCHOR BOLT SLEEVE DETAIL
Hex or Square Nut and Washer by Others
Bolt Extension as Required
Floor Concrete by Mason
Anchor Bolt Templates Accurately Set in Place by Mason
Cast Iron Sleeve with Plate
Square 1/2" Spacer Nut by Others for 1/4" Bolt Thread Only
Square Nut by Others
Anchor Bolt by Others Embedded 4"

ANCHOR BOLT INSTALLATION INSTRUCTIONS
1. BMK Bases ordered with Anchor Bolt Templates are furnished with Tem-plates already bolted in place.
2. The Mounting Carton contains the necessary number of cast iron sleeves and fishplates shown in position on the base drawing.
3. Fabricate Emb. Anchor Bolts and bolt in position in locations shown on the drawings before pouring concrete.

TEMPLATES
ANCHOR BOLT SLEEVES
MAS-A-CHRETE
Z-1225 SNUBBER
Z1225-250 (4) REQUIRED
2⅛

Anchorage Requirements:
(2) ⅞" Dia. Mason SAS Anchors
2 3/4" Nom. Embedment, 4" Edge Distance
3000 psi Stone Aggregate Concrete;
6" Thick min.
Installed per ICC ESR 3037
per Snubber

Supplied By MASON IND.

Yes	No	
■	□	BASE
■	□	TEMPLATE
■	□	ANCHOR BOLT SLEEVES AND FISHPLATE
□	■	LOOSE REINFORCING STEEL
■	□	WELDED REINFORCING STEEL

SLF-B2-450, SLF-B2-290, MOTOR END, ONE LAYER 1/2 SQ. bar 6" Centers Both Ways Bottom Only, (4) 5/8" EMBED. BOLTS 4" EMBEDMENT (BY OTHERS)
W, 54x36 (LxW) MIN. HKP., L

DSIGN NR | CHKD | DATE | DWG NO. WF-31784-01

ISOLATION P-3 5

SCALE NONE

MASON INDUSTRIES, Inc.
Manufacturers of Vibration Control Products
350 Rabro Drive, Hauppauge, NY 11788, 516/348-0282, FAX 516/348-0279
2101 W. Crescent Ave., Suite D, Anaheim, CA 92801, 714/535-2727, FAX 714/535-5738

CERTIFIED FOR
JOB NAME: COMPTON COLLEGE IB#2
CUSTOMER: CAPITAL ENGINEERING
CUSTOMER P.O.: JOB NO.:
MASON E.O.: 31784 DWG. NO.: WF-31784-01
REQUIRED: (2) TAG: P-1 & P-2

TYPE BMK/KSL BOLTED MODULAR CONCRETE INERTIA BASE

MANUF. BELL & GOSSETT
SIZE 2.5X2 MODEL e-1510 2AD-HR
BASE NUMBER
PUMP TYPE: [ ] CLOSE COUPLED [X] END SUCTION [ ] DOUBLE SUCTION
SUCTION SIZE 2.5" | SIZE 1.5 MOTOR H.P. | 145T FRAME SIZE | 1800 R.P.M.
WEIGHTS: STEEL BASE 72 lbs. EQUIPMENT 155 lbs. BASE w/ CONCRETE 672 lbs. TOTAL 827 lbs.
FOR SPRING MOUNT DATA SEE: WF-31784-01A
FOR SNUBBER DATA SEE: WF-31784-01B
2.0" SPECIFIED DEFLECTION

Typical Base Layout- For Actual Locations See Plan View Below.

ANCHOR BOLT SLEEVE DETAIL
Hex or Square Nut and Washer by Others
Bolt Extension as Required
Floor Concrete by Mason
Anchor Bolt Templates Accurately Set in Place by Mason
Cast Iron Sleeve with Plate
Square 1/2" Spacer Nut by Others for 1/4" Bolt Thread Only
Square Nut by Others
Anchor Bolt by Others Embedded 4"

ANCHOR BOLT INSTALLATION INSTRUCTIONS
1. BMK Bases ordered with Anchor Bolt Templates are furnished with Tem-plates already bolted in place.
2. The Mounting Carton contains the necessary number of cast iron sleeves and fishplates shown in position on the base drawing.
3. Fabricate Emb. Anchor Bolts and bolt in position in locations shown on the drawings before pouring concrete.

TEMPLATES
ANCHOR BOLT SLEEVES
MAS-A-CHRETE
Z-1225 SNUBBER
Z1225-250 (4) REQUIRED
2⅛

Anchorage Requirements:
(2) ⅞" Dia. Mason SAS Anchors
2 3/4" Nom. Embedment, 4" Edge Distance
3000 psi Stone Aggregate Concrete;
6" Thick min.
Installed per ICC ESR 3037
per Snubber

Supplied By MASON IND.

Yes	No	
■	□	BASE
■	□	TEMPLATE
■	□	ANCHOR BOLT SLEEVES AND FISHPLATE
□	■	LOOSE REINFORCING STEEL
■	□	WELDED REINFORCING STEEL

SLF-B2-450, SLF-B2-290, MOTOR END, ONE LAYER 1/2 SQ. bar 6" Centers Both Ways Bottom Only, (4) 5/8" EMBED. BOLTS 4" EMBEDMENT (BY OTHERS)
W, 54x36 (LxW) MIN. HKP., L

DSIGN NR | CHKD | DATE | DWG NO. WF-31784-01

ISOLATION FOR P-1 & P-2 4

SCALE NONE

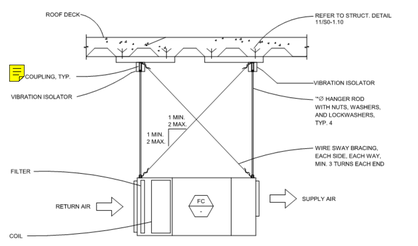

FAN COIL UNIT MOUNTING 3

SCALE NONE

IDENTIFICATION STAMP
DIV. OF THE STATE ARCHITECT
APP. 03-119458 INC:
REVIEWED FOR
SS ☑ FLS ☑ ACS ☑
DATE:05/23/2019

DIVISION OF THE STATE ARCHITECT
355 South Grand Avenue, Suite 2100
Los Angeles, CA 90012
ph: (213) 897-3995 fx:(213) 897-3159

agency

tBP architecture planning interiors

tBP/Architecture
4611 Teller Avenue
Newport Beach, CA 92660
ph: 949.673.0300 fx: 949.732.3895

architect

CAPITAL ENGINEERING CONSULTANTS, INC.
LONG BEACH, CALIFORNIA
CM - RH/SL/TS PM. - DESIGN TEAM
171221.00 PROJECT NO.

DESIGN PROFESSIONAL ENGINEER REGISTERED MECHANICAL ENGINEER M 34011 EXPIRES 3/31/20 STATE OF CALIFORNIA

DATE SIGNED: 04/05/19

consultant

COMPTON COLLEGE
INSTRUCTIONAL BUILDING No.2
COMPTON COMMUNITY COLLEGE DISTRICT
1111 E. ARTESIA BLVD. COMPTON, CA.

owner

tBP project number: 20998.00
file name:
drawn by: checked by:
date: 11 / 20 / 2018

rev:	date:	description:

THIS DRAWING AND THE DESIGNS, IDEAS AND OTHER INFORMATION CONTAINED HEREIN CONSTITUTE UNPUBLISHED WORK OF tBP/ARCHITECTURE AND SHALL REMAIN PROPERTY OF tBP/ARCHITECTURE IN PERPETUITY. NO PART THEREOF SHALL BE REPRODUCED, DISCLOSED, DISTRIBUTED, SOLD, PUBLISHED OR OTHERWISE USED IN ANY WAY WITHOUT THE ADVANCED EXPRESS WRITTEN CONSENT OF tBP/ARCHITECTURE.

drawing title:
DETAILS

drawing no.
M7-4
drawing of

4/8/2019 5:59:09 PM

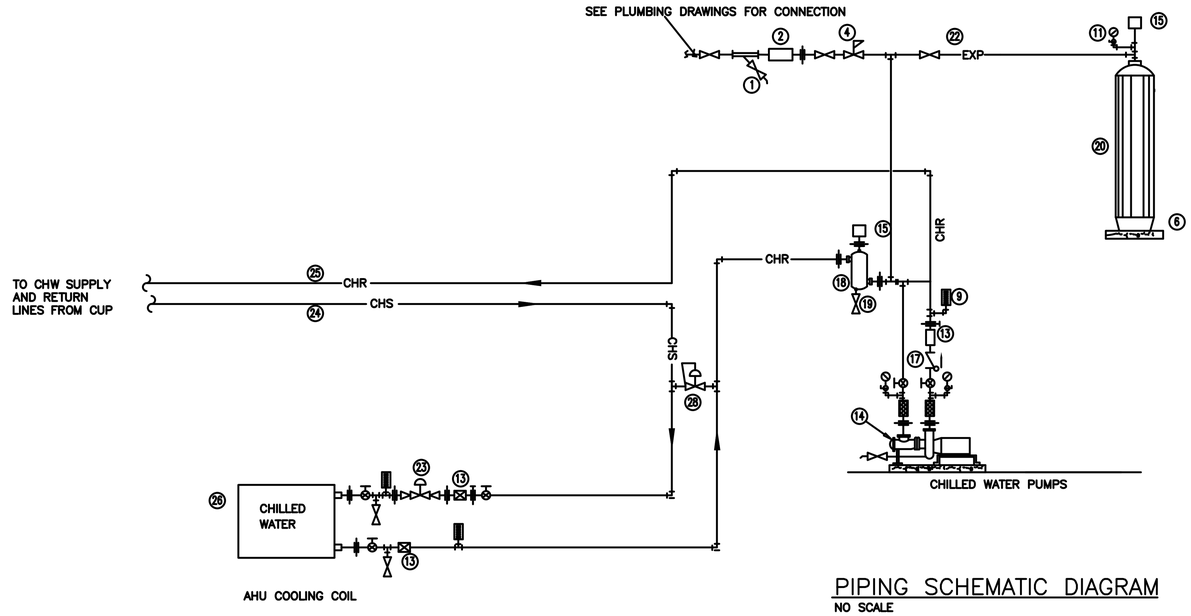

PIPING SCHEMATIC DIAGRAM

NO SCALE

CHILLER PIPING LEGEND

1. STRAINER WITH BLOW DOWN VALVE (TYPICAL).
2. REDUCED PRESSURE BACKFLOW PREVENTER WITH 3/4" DRAIN LINE TO FLOOR DRAIN.
4. PRV SELF FILL VALVE SET AT 12 PSIG.
5. 3" OVERFLOW TO DRAIN.
13. FLOW METER WITH BALANCE COCK.
14. SUCTION DIFFUSER REQUIRED AT ALL FLOOR MOUNTED PUMPS. DIFFUSER SHALL MATCH PUMP INLET AND SYSTEM LINE SIZE AND SHALL BE SAME MANUFACTURER AS PUMP.
15. AIR VENT, (TYPICAL). INSTALL AT ALL RISES, DROPS, AND HIGH POINTS OF SYSTEM.
17. SPRING LOADED CHECK VALVE (TYPICAL).
18. AIR SEPARATOR (FULL LINE SIZE).
19. 3/4" GATE VALVE, TYPICAL PROVIDE THREADED HOSE CONNECTION WHEN USED AS A DRAIN VALVE.
20. BLADDER EXPANSION TANK
22. EXPANSION WATER PIPING.
23. TWO-WAY TCV CONTROL VALVE (TYPICAL).
24. CHILLED WATER SUPPLY PIPING.
25. CHILLED WATER RETURN PIPING.
26. CHILLED WATER COIL.
28. PRESSURE MODULATING VALVE (TYPICAL).

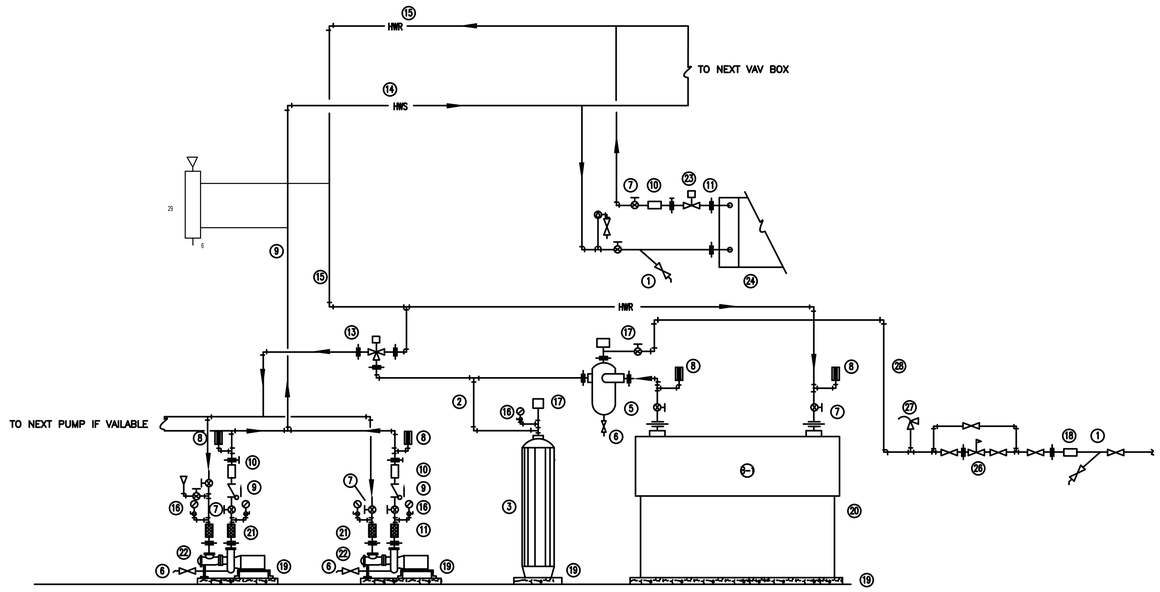

HOT WATER PIPING SCHEMATIC DIAGRAM

NO SCALE

KEY NOTES

1. STRAINER WITH BLOW DOWN VALVE, (TYPICAL).
2. EXPANSION WATER PIPING TO EXPANSION TANK.
3. EXPANSION TANK BLADDER TYPE VERTICAL FLOOR MOUNTED.
5. AIR SEPARATOR, FULL LINE SIZE.
6. 1" GATE VALVE. PROVIDE THREADED HOSE CONNECTION WHEN USED AS A DRAIN VALVE, (TYPICAL).
7. BALL VALVE 2" AND SMALLER OR BUTTERFLY VALVE 2" AND LARGER, (TYPICAL).
8. STEM THERMOMETER 9" SCALE, 30°-240° F, (TYPICAL).
9. SPRING LOADED CHECK VALVE, (TYPICAL).
10. FLOW METER WITH BALANCE COCK, CIRCUIT SETTER, (TYPICAL).
11. UNION OF FLANGE, (TYPICAL).
13. THREE WAY ATC CONTROL VALVE SUPPLIED BY CONTROL CONTRACTOR, INSTALLED BY MECHANICAL CONTRACTOR, (TYPICAL).
14. HOT WATER SUPPLY PIPING, (TYPICAL).
15. HOT WATER RETURN PIPING, (TYPICAL).
16. PRESSURE GAUGE WITH GAUGE COCK 0-100 PSIG, (TYPICAL).
17. AIR VENT, (TYPICAL). INSTALL AT ALL RISES, DROPS, AND HIGH POINTS OF SYSTEM.
18. REDUCED PRESSURE BACKFLOW PREVENTER.
19. HOUSEKEEPING PAD.
20. BOILER.
21. FLEXIBLE PIPE CONNECTOR, (TYPICAL).
22. SUCTION DIFFUSER REQUIRED AT ALL BASE MOUNTED PUMPS. DIFFUSER SHALL MATCH PUMP INLET AND SYSTEM LINE SIZE AND SHALL BE SAME MANUFACTURER AS PUMP.
23. TWO-WAY TCV CONTROL VALVE SUPPLIED BY CONTROL CONTRACTOR. INSTALLED BY MECHANICAL CONTRACTOR (TYPICAL).
24. TYPICAL VAV BOX WITH HOT WATER REHEAT COIL.
26. PRV, SELF FILL VALVE, SET AT 12 PSIG.
27. PRESSURE RELIEF VALVE.
28. 1" COLD WATER MAKE-UP LINE. SEE PLUMBING DRAWINGS FOR CONNECTION.
29. CHEMICAL POT FEEDER

4/8/2019 5:59:12 PM

IDENTIFICATION STAMP
DIV. OF THE STATE ARCHITECT
APP. 03-119458 INC:
REVIEWED FOR
SS ☑ FLS ☑ ACS ☑
DATE: 05/23/2019

DIVISION OF THE STATE ARCHITECT
355 South Grand Avenue, Suite 2100
Los Angeles, CA 90012
ph: (213) 897-3995 fx:(213) 897-3159

agency

tBP
architecture
planning
interiors
tBP/Architecture
4611 Teller Avenue
Newport Beach, CA 92660
ph: 949.673.0300 fx: 949.732.3895

architect

CAPITAL
ENGINEERING CONSULTANTS, INC.
LONG BEACH, CALIFORNIA
CM - RH/SL/TS PM - DESIGN TEAM
171221.00 PROJECT NO.

REGISTERED PROFESSIONAL ENGINEER
CHRISTOPHER V. TERRY
M 34011
EXPIRES 9/30/19
MECHANICAL
STATE OF CALIFORNIA

DATE SIGNED: 04/05/19

consultant

COMPTON COLLEGE
INSTRUCTIONAL BUILDING No.2
COMPTON COMMUNITY COLLEGE DISTRICT
1111 E. ARTESIA BLVD. COMPTON, CA.

owner

tBP project number: 20998.00
file name:
drawn by: checked by:
date: 11 / 20 / 2018

rev:	date:	description:

THIS DRAWING AND THE DESIGNS, DEPICTIONS, IDEAS AND OTHER INFORMATION CONTAINED HEREIN CONSTITUTE UNPUBLISHED WORK OF tBP/ARCHITECTURE AND SHALL REMAIN PROPERTY OF tBP/ARCHITECTURE IN PERPETUITY. NO PART THEREOF SHALL BE REPRODUCED, DISCLOSED, DISTRIBUTED, SOLD, PUBLISHED OR OTHERWISE USED IN ANY WAY WITHOUT THE ADVANCED EXPRESS WRITTEN CONSENT OF tBP/ARCHITECTURE.

drawing title:
DETAILS

drawing no.
M7-5
drawing of

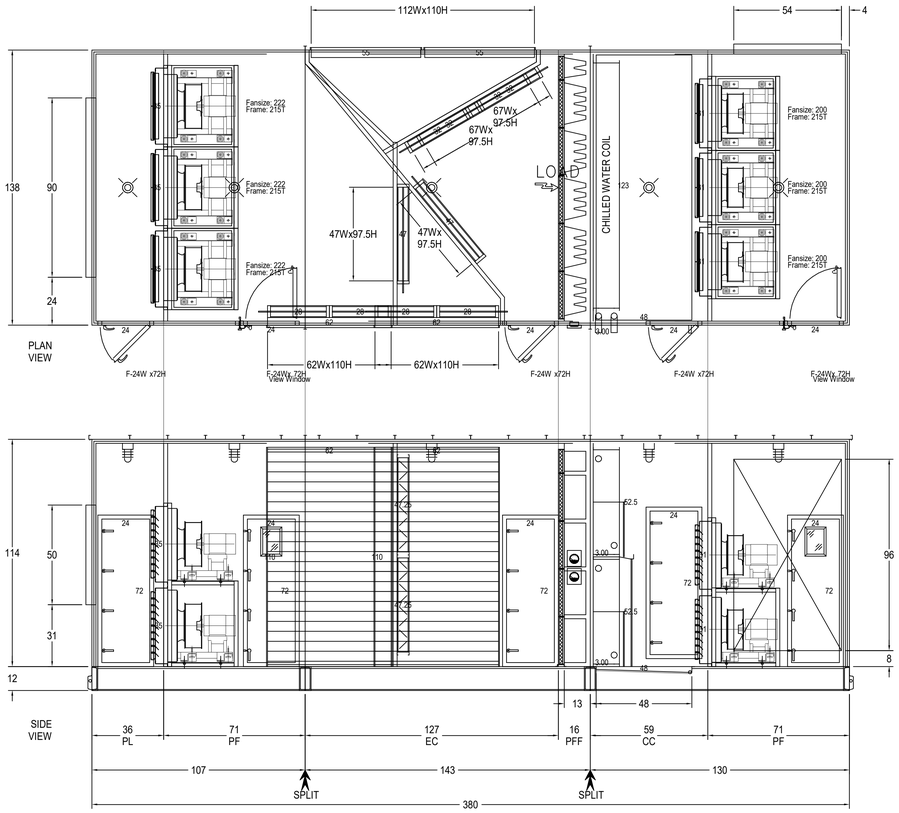

AHU LAYOUT 1

SCALE NONE

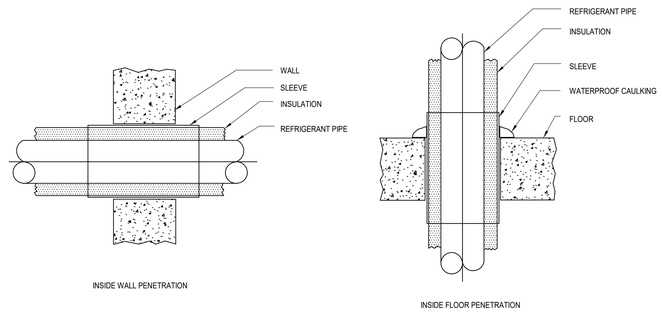

REFRIGERENT PIPE PENETRATION 2

SCALE NONE

4/8/2019 5:59:13 PM

IDENTIFICATION STAMP
DIV. OF THE STATE ARCHITECT
APP. 03-119458 INC:
REVIEWED FOR
SS ☑ FLS ☑ ACS ☑
DATE:05/23/2019

DIVISION OF THE STATE ARCHITECT
355 South Grand Avenue, Suite 2100
Los Angeles, CA 90012
ph: (213) 897-3995 fx:(213) 897-3159
agency

tBP
architecture
planning
interiors

tBP/Architecture
4611 Teller Avenue
Newport Beach, CA 92660
ph: 949.673.0300 fx: 949.732.3895
architect

CAPITAL
ENGINEERING CONSULTANTS, INC.
LONG BEACH, CALIFORNIA
CM - RH/SL/TS 171221.00
PM - DESIGN TEAM PROJECT NO.

REGISTERED PROFESSIONAL ENGINEER
ROBERT V. HEYCOCK
M 34011
Expires 3/31/20
MECHANICAL
STATE OF CALIFORNIA

DATE SIGNED: 04/05/19
consultant

COMPTON COLLEGE
INSTRUCTIONAL BUILDING No.2
COMPTON COMMUNITY COLLEGE DISTRICT
1111 E. ARTESIA BLVD. COMPTON, CA.
owner

tBP project number: 20998.00
file name:
drawn by: checked by:
date: 11 / 20 / 2018

rev:	date:	description:

THIS DRAWING AND THE DESIGNS, DEPICTIONS, IDEAS AND OTHER INFORMATION CONTAINED HEREIN CONSTITUTE UNPUBLISHED WORK OF tBP/ARCHITECTURE AND SHALL REMAIN PROPERTY OF tBP/ARCHITECTURE IN PERPETUITY. NO PART THEREOF SHALL BE REPRODUCED, DISCLOSED, DISTRIBUTED, SOLD, PUBLISHED OR OTHERWISE USED IN ANY WAY WITHOUT THE ADVANCED EXPRESS WRITTEN CONSENT OF tBP/ARCHITECTURE.

drawing title:
DETAILS

drawing no.
M7-6

drawing of

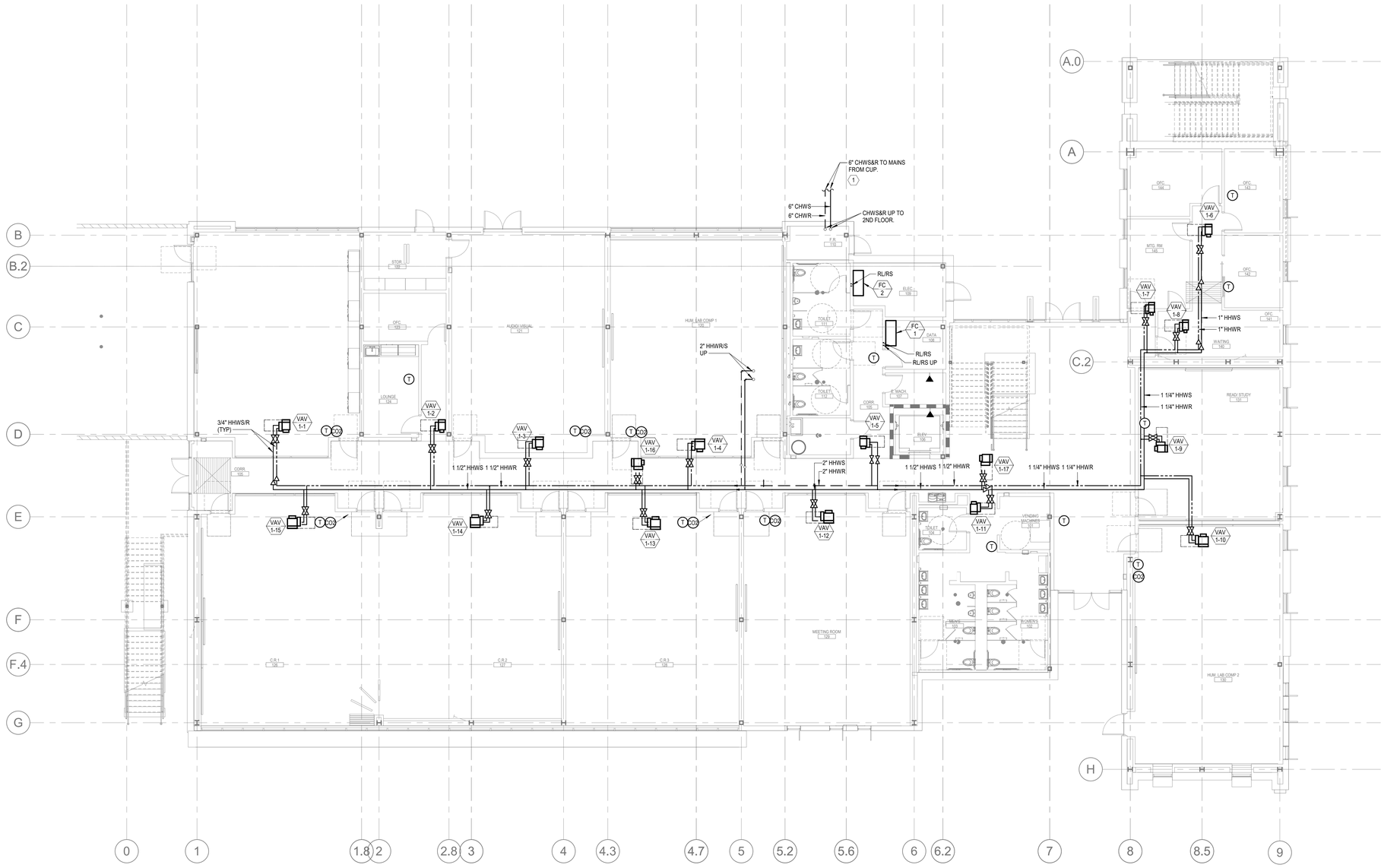

MECH PIPING 1ST FLOOR PLAN 1

SCALE 1/8" = 1'-0"

KEY NOTES:

1. REFER TO SHEET MD-6 SITE PLAN FOR CHW CONNECTION TO CENTRAL UTILITY PLANT.

GENERAL NOTES:

1. ALL HHWS/R PIPES TO VAVs ARE 3/4" UNLESS OTHERWISE NOTED.
2. THE MECHANICAL CONTRACTOR SHALL COORDINATE FINAL CHILLED WATER ROUTING AND NOTIFY THE ARCHITECT, MECHANICAL ENGINEER AND CIVIL ENGINEER OF ANY DISCREPANCIES OR CLEARANCE ISSUES.
3. THE MECHANICAL CONTRACTOR SHALL BE RESPONSIBLE FOR COORDINATING AND PROVIDING ADDITIONAL AIR VENTING OF THE CHILLED WATER LINES AT ALL HIGH POINTS.
4. ALL UNDERGROUND CHILLED WATER PIPE SHALL BE PRE-INSULATED IN ACCORDANCE WITH 2016 CA ENERGY CODE.

IDENTIFICATION STAMP
DIV. OF THE STATE ARCHITECT
APP. 03-119458 INC:
REVIEWED FOR
SS ☑ FLS ☑ ACS ☑
DATE:05/23/2019

DIVISION OF THE STATE ARCHITECT
355 South Grand Avenue, Suite 2100
Los Angeles, CA 90012
ph: (213) 897-3995 fx:(213) 897-3159
agency

tBP
architecture
planning
interiors

tBP/Architecture
4611 Teller Avenue
Newport Beach, CA 92660
ph: 949.673.0300 fx: 949.732.3895
architect

CAPITAL
ENGINEERING CONSULTANTS, INC.
LONG BEACH, CALIFORNIA
CM - RH/SL/TS 171221.00
PM - DESIGN TEAM PROJECT NO.

REGISTERED PROFESSIONAL ENGINEER
CHRISTOPHER V. MERCURIO
M 34011
EXPIRES 03/30/20
MECHANICAL
STATE OF CALIFORNIA

DATE SIGNED: 04/05/19
consultant

COMPTON COLLEGE
INSTRUCTIONAL BUILDING No.2
COMPTON COMMUNITY COLLEGE DISTRICT
1111 E. ARTESIA BLVD. COMPTON, CA.
owner

tBP project number: 20998.00
file name:
drawn by: checked by:
date: 11 / 20 / 2018

rev:	date:	description:

THIS DRAWING AND THE DESIGNS, DEPICTIONS, IDEAS AND OTHER INFORMATION CONTAINED HEREIN CONSTITUTE UNPUBLISHED WORK OF tBP/ARCHITECTURE AND SHALL REMAIN PROPERTY OF tBP/ARCHITECTURE IN PERPETUITY. NO PART THEREOF SHALL BE REPRODUCED, DISCLOSED, DISTRIBUTED, SOLD, PUBLISHED OR OTHERWISE USED IN ANY WAY WITHOUT THE ADVANCED EXPRESS WRITTEN CONSENT OF tBP/ARCHITECTURE.

drawing title:
MECH PIPING 1ST FLOOR PLAN

drawing
MP1-1
drawing of

4/8/2019 5:59:17 PM

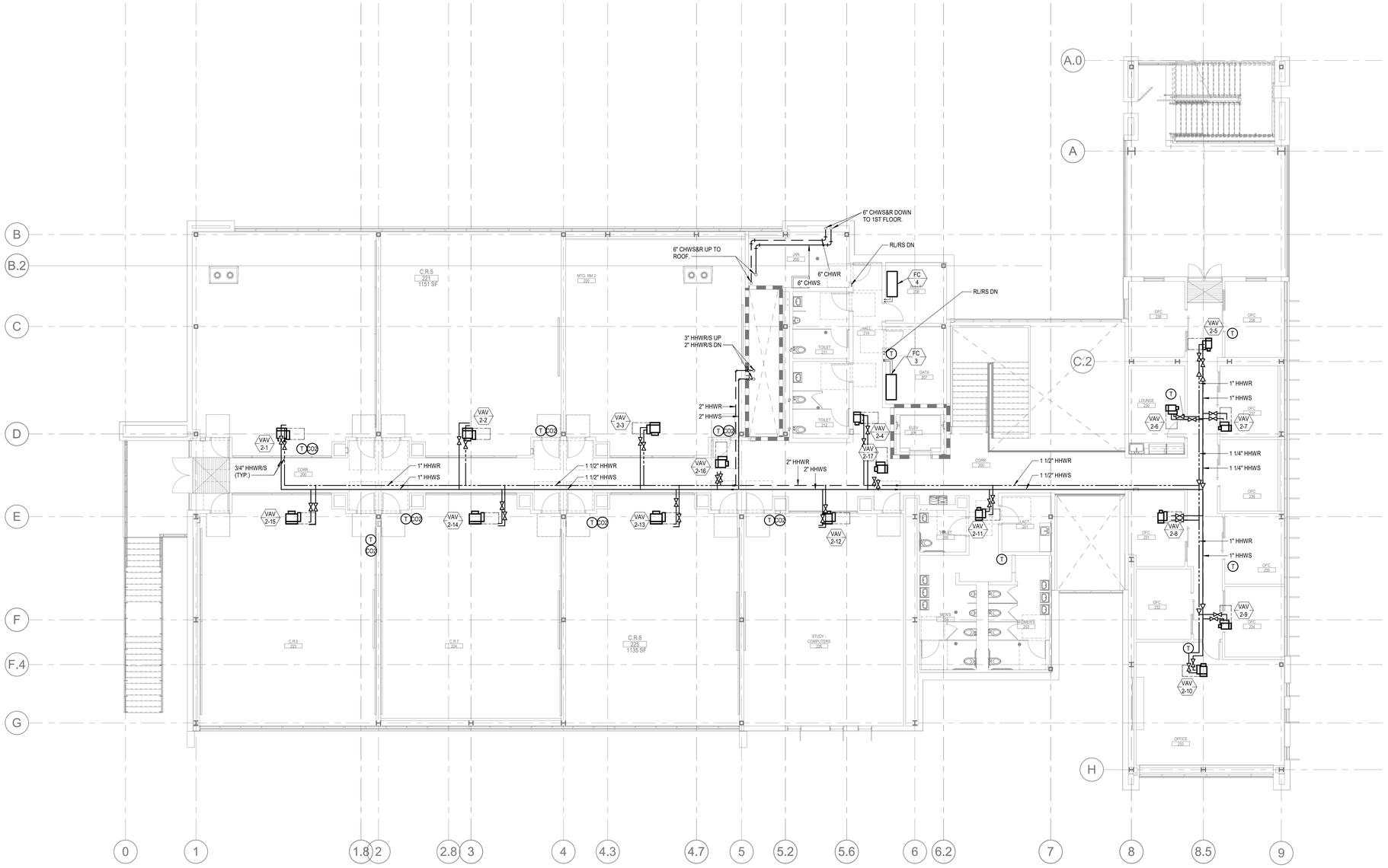

MECH PIPING 2ND FLOOR PLAN 1

SCALE 1/8" = 1'-0"

NORTH

GENERAL NOTES:

1. ALL HHWS/R PIPES TO VAVs ARE 3/4" UNLESS OTHERWISE NOTED.

IDENTIFICATION STAMP
DIV. OF THE STATE ARCHITECT
APP. 03-119458 INC:
REVIEWED FOR
SS ☑ FLS ☑ ACS ☑
DATE:05/23/2019

DIVISION OF THE STATE ARCHITECT
355 South Grand Avenue, Suite 2100
Los Angeles, CA 90012
ph: (213) 897-3995 fx:(213) 897-3159

agency

tBP architecture planning interiors

tBP/Architecture
4611 Teller Avenue
Newport Beach, CA 92660
ph: 949.673.0300 fx: 949.732.3895

architect

CAPITAL ENGINEERING CONSULTANTS, INC.
LONG BEACH, CALIFORNIA
CM - RH/SL/TS 171221.00
PM - DESIGN TEAM PROJECT NO.

REGISTERED PROFESSIONAL ENGINEER
CHRISTOPHER V. MERCURIO
M 34011
EXPIRES 9/30/20
MECHANICAL
STATE OF CALIFORNIA

DATE SIGNED: 04/05/19

consultant

COMPTON COLLEGE
INSTRUCTIONAL BUILDING No.2

COMPTON COMMUNITY COLLEGE DISTRICT
1111 E. ARTESIA BLVD. COMPTON, CA.

owner

tBP project number: 20998.00
file name:
drawn by: checked by:
date: 11 / 20 / 2018

rev:	date:	description:

THIS DRAWING AND THE DESIGNS, DEPICTIONS, IDEAS AND OTHER INFORMATION CONTAINED HEREIN CONSTITUTE UNPUBLISHED WORK OF tBP/ARCHITECTURE AND SHALL REMAIN PROPERTY OF tBP/ARCHITECTURE IN PERPETUITY. NO PART THEREOF SHALL BE REPRODUCED, DISCLOSED, DISTRIBUTED, SOLD, PUBLISHED OR OTHERWISE USED IN ANY WAY WITHOUT THE ADVANCED EXPRESS WRITTEN CONSENT OF tBP/ARCHITECTURE.

drawing title:
MECH PIPING 2ND FLOOR PLAN

drawing
MP1-2

drawing of

4/8/2019 5:59:20 PM

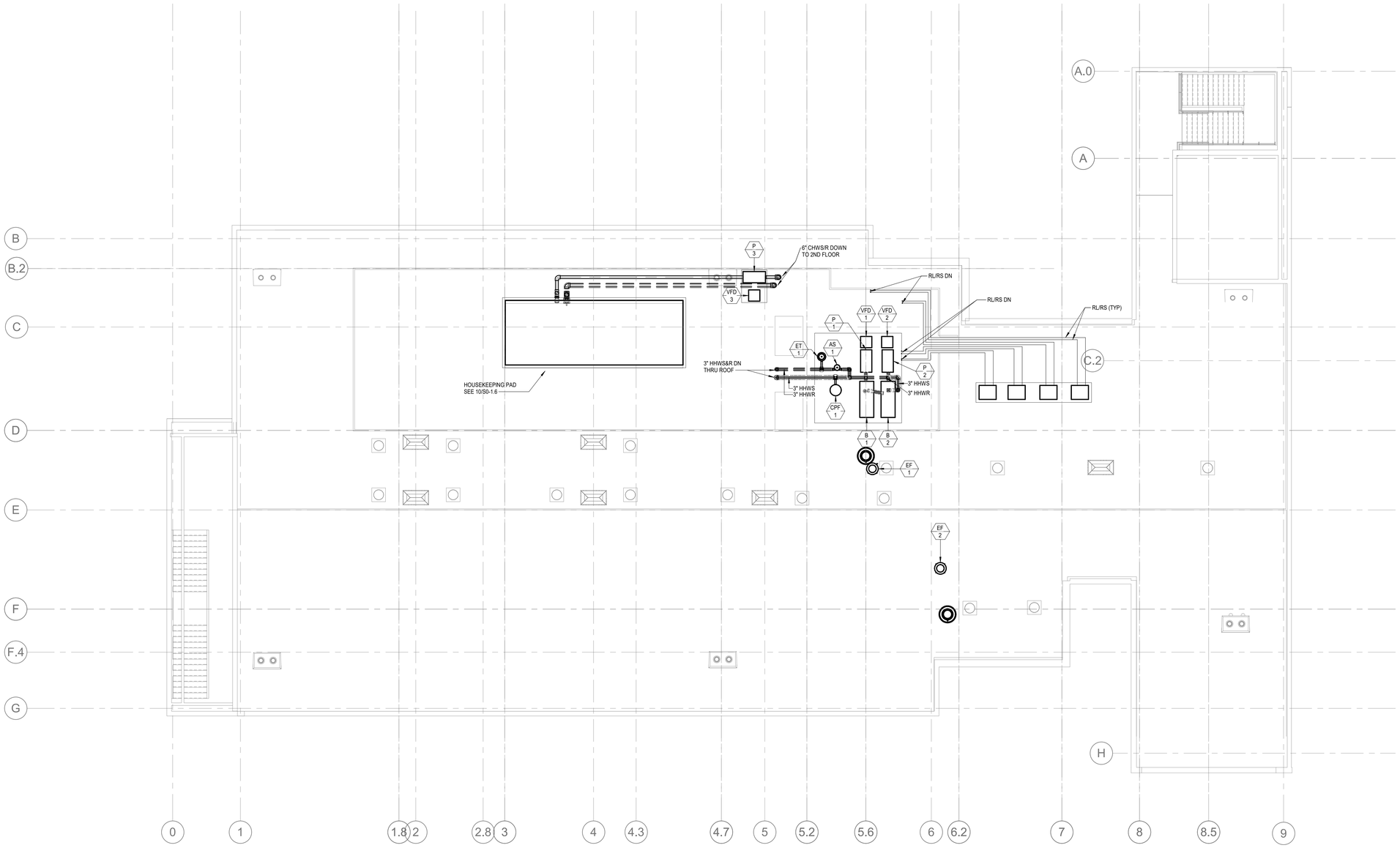

MECH PIPING ROOF PLAN 1

SCALE 1/8" = 1'-0"

IDENTIFICATION STAMP
DIV. OF THE STATE ARCHITECT
APP. 03-119458 INC:
REVIEWED FOR
SS ☑ FLS ☑ ACS ☑
DATE:05/23/2019

DIVISION OF THE STATE ARCHITECT
355 South Grand Avenue, Suite 2100
Los Angeles, CA 90012
ph: (213) 897-3995 fx:(213) 897-3159

agency

tBP architecture planning interiors

tBP/Architecture
4611 Teller Avenue
Newport Beach, CA 92660
ph: 949.673.0300 fx: 949.732.3895

architect

CAPITAL ENGINEERING CONSULTANTS, INC.
LONG BEACH, CALIFORNIA
CM - RH/SL/TS 171221.00
PM - DESIGN TEAM PROJECT NO.

REGISTERED PROFESSIONAL ENGINEER
CHRISTOPHER V. MERCURIO
M 34011
EXPIRES 9/30/20
MECHANICAL
STATE OF CALIFORNIA

DATE SIGNED: 04/05/19

consultant

COMPTON COLLEGE
INSTRUCTIONAL BUILDING No.2

COMPTON COMMUNITY COLLEGE DISTRICT
1111 E. ARTESIA BLVD. COMPTON, CA.

owner

tBP project number: 20998.00
file name:
drawn by: checked by:
date: 11 / 20 / 2018

rev:	date:	description:

THIS DRAWING AND THE DESIGNS, DEPICTIONS, IDEAS AND OTHER INFORMATION CONTAINED HEREIN CONSTITUTE UNPUBLISHED WORK OF tBP/ARCHITECTURE AND SHALL REMAIN PROPERTY OF tBP/ARCHITECTURE IN PERPETUITY. NO PART THEREOF SHALL BE REPRODUCED, DISCLOSED, DISTRIBUTED, SOLD, PUBLISHED OR OTHERWISE USED IN ANY WAY WITHOUT THE ADVANCED EXPRESS WRITTEN CONSENT OF tBP/ARCHITECTURE.

drawing title:
MECH PIPING ROOF PLAN

drawing
MP3-1
drawing of

4/8/2019 5:59:21 PM

GREEN BUILDING CODE NOTES

1. A FINAL REPORT FOR THE TESTING AND ADJUSTING OF ALL NEW SYSTEMS SHALL BE COMPLETED PRIOR TO FINAL APPOROVAL BY THE FIELD INSPECTOR. THIS REPORT SHALL BE SIGNED BY THE INVIDIVIDUAL RESPONSIBLE FOR PERFORMING THESE SERVICES.
2. AN OPERATING & SYSTEMS MANUAL SHALL BE PROVIDED TO THE OWNER OR REPRESENTATIVE AND TO THE FIELD INSPECTOR AT THE TIME OF FINAL INSPECTION.
3. IF THE NEW HVAC SYSTEM IS USED DURING CONSTRUCTION, USE RETURN AIR FILTERS WITH A MERV OF 8. REPLACE ALL FILTERS IMEEDIATELY PRIOR TO OCCUPANCY.
4. ALL DUCT AND OTHER RELATED AIR DISTRIBUTION COMPONENT OPENING SHALL BE COVERED WITH TAPE, PLASTIC, OR SHEET METAL UNTIL THE FINAL STARTUP OF THE HEATING, COOLING AND VENTILATING EQUIPMENT.
5. THE HVAC, REFRIGERATION AND FIRE SUPPRESSION EQUIPMENT SHALL NOT CONTAIN CFC OR HALONS.
6. HVAC AND WATER SYSTEMS TO BE BALANCED PER AABBC STANDARDS.
7. SYSTEM DESCRIPTION: HVAC SYSTEM CONSIST OF MULTIPLE ZONE VARIABLE VOLUME & CONSTANT VOLUME AIR HANDLING SYSTEMS AND STAND ALONE SPLIT SYSTEM DX UNITS.

DSA NOTES

1. ALL WORK SHALL CONFORM TO 2016 EDITION TITLE 24, CALIFORNIA CODE OF REGULATIONS (CCR).
2. THE SCOPE OF WORK; CLEARLY INDICATED THE SCOPE OF WORK ON THE COVER SHEET OR GENERAL NOTE SHEET OF THE DRAWINGS.
3. FABRICATION AND INSTALLATION OF DEFERRED SUBMITTAL ITEMS SHALL NOT BE STARTED UNTIL CONTRACTOR'S DRAWINGS, SPECIFICATIONS, AND ENGINEERING CALCULATIONS FOR THE ACTUAL SYSTEMS TO BE INSTALLED HAVE BEEN ACCEPTED AND SIGNED BY THE ARCHITECT OR STRUCTURAL ENGINEER AND APPROVED BY THE DSA. LIST DEFERRED SUBMITTAL ITEMS FOR THIS PROJECT.
4. CHANGE TO THE APPROVED DRAWINGS AND SPECIFICATIONS SHALL BE MADE BY ADDENDA OR CONSTRUCTION CHANGE DOCUMENT (CCD) APPROVED BY DSA, AS REQUIRED BY SECTION 4-338, PART 1, TITLE 24, CCR.
5. A "DSA CERTIFIED" PROJECT INSPECTOR EMPLOYED BY THE DISTRICT (OWNER) AND APPROVED BY DSA SHALL PROVIDE CONTINUOUS INSPECTION OF THE WORK. THE DUTIES OF THE INSPECTOR ARE DEFINED IN SECTION 4-342, PART 1, TITLE 24, CCR.
6. A DSA ACCEPTED TESTING LABORATORY DIRECTLY EMPLOYED BY THE DISTRICT (OWNER) SHALL CONDUCT ALL THE REQUIRED TESTS AND INSPECTIONS FOR THE PROJECT.
7. THE INTENT OF THESE DRAWINGS AND SPECIFICATIONS IS THAT THE WORK OF THE ALTERATION, REHABILITATION OR RECONSTRUCTION IS TO BE IN ACCORDANCE WITH TITLE 24, CCR. SHOULD ANY EXISTING CONDITIONS SUCH AS DETERIORATION OR NON-COMPLYING CONSTRUCTION BE DISCOVERED WHICH IS NOT COVERED BY THE CONTRACT DOCUMENTS WHEREIN THE FINISHED WORK WILL NOT COMPLY WITH TITLE 24, CCR, A CONSTRUCTION CHANGE DOCUMENT (CCD), OR A SEPARATE SET OF PLANS AND SPECIFICATIONS, DETAILING AND SPECIFYING THE REQUIRED WORK SHALL BE SUBMITTED TO AND APPROVED BY DSA BEFORE PROCEEDING WITH THE WORK. (SECTION 4-317(C), PART 1, TITLE 24; CCR)
8. GRADING PLANS, DRAINAGE IMPROVEMENTS, ROAD AND ACCESS REQUIREMENTS AND ENVIRONMENTAL HEALTH CONSIDERATIONS SHALL COMPLY WITH ALL LOCAL ORDINANCES.

NATURAL GAS DEMAND CALCULATION

EQUIPMENT	QUANTITY	DESCRIPTION	CFH PER UNIT	DEMAND (CFH)
BOILER	2	BOILER (MECHANICAL)	1,700	3,400
GWH-1	1	GAS WATER HEATER	120	120
TOTAL DEMAND				3,520

COLD WATER CALCULATIONS

CAPITAL ENGINEERING CONSULTANTS, INC.

DESIGN CRITERIA

Total estimated demand (GPM) from fixture calc sheet:			86
1. Pressure @ Street Main (Static Pressure - information can be aquired from the local Water Purveyor)			49
2. Pressure loss due to height (from buried depth below grade to the highest most point in the system - above ceiling, floor level of a multi-story building, etc...)	30	ft. x .434	13.02
3. Pressure loss thru meter (<u>Note</u>: losses may vary from 2 PSI up to 5 PSI - verify meter type and losses with the local Water Purveyor)			0
4. Pressure loss thru other devices (i.e., BFP) (Note: losses may vary from 8 PSI up to 15 PSI - verify BFP type and losses with the local Water Purveyor)			0
5. Total pressure loss (add lines 2, 3 & 4)			13.02
6. Pressure required at highest fixture (Note: 20 PSI for a Flush Tank Water Closet and 25 PSI for a Flush Valve Water Closet)			25
7. Pressure available for Friction Loss (line1-line 5-line 6)			10.98
8. Total developed length of run (Note: Add an addition 25% of total pipe length to account for equivalent length of fittings and vales).			175

FRICTION LOSS CALCULATION

from line 7 **10.98** / from line 8 **175** PSI X 100 = **6.27** PSI/100 ft.

NOTE : IF YOU END UP WITH A (-) NEGATIVE VALUE, A BOOSTER PUMP WILL BE REQUIRED. IF SO, REFER TO BOOSTER PUMP CALCULATION SHEET.

Cold Water Service Required: **2-1/2"** **USE 3# / 100 FT**

Water meter size required, based on above demand: -

GENERAL NOTES

1. ACCESS PANELS SHALL BE PROVIDED AS NECESSARY TO PROPERLY ACCESS THE PLUMBING SYSTEM INCLUDING VALVES, REFER TO SPECIFICATION SECTION 083113. ARCHITECT TO APPROVE TYPE/FINISH PRIOR TO INSTALLATION.
2. OFFSET VENT THROUGH ROOFS 10'-0" MINIMUM FROM AIR INTAKES AND 4'-0" FROM OUTSIDE WALLS.
3. HVAC EQUIPMENT IS SHOWN FOR THE COORDINATION OF UTILITIES ONLY. REFER TO 'M' SHEETS FOR MORE INFORMATION.
4. THE CONNECTION OF CONDENSATE DRAIN LINES TO HVAC EQUIPMENT SHALL INCLUDE A MINIMUM 4" DEEP "P"-TRAP AND PLUGGED TEE AT ALL OFFSETS.
5. PROVIDE WATER HAMMER ARRESTORS (WHA) AS INDICATED ON PLUMBING PLANS AND AS DESCRIBED WITHIN DIVISION 22 SPECIFICATIONS. SIZING SHALL BE IN ACCORDANCE WITH PDI STANDARD WH-201.
6. FOR PIPES PASSING THROUGH, UNDER OR PARALLEL TO BUILDING FOOTINGS, RETAINING WALLS ETC. REFER TO STRUCTURAL DETAILS, 'S' SHEETS, FOR TYPICAL ARRANGEMENT.
7. CONTRACTOR SHALL FIELD VERIFY ALL POINTS OF CONNECTION TO SITE PIPING (LOCATIONS AND INVERT) PRIOR TO EXCAVATION, FABRICATION AND INSTALLATION OF ASSOCIATED PIPING RUNS. NOTIFY THE PROJECT ARCHITECT AND CIVIL ENGINEER IMMEDIATELY IF POINTS OF CONNECTION OR INVERTS ARE DIFFERENT THAN REPRESENTED ON THE DRAWINGS.
8. OFFSET ALL RISERS AND DROPS TO AVOID PENETRATIONS AT STRUCTURAL TOP PLATES.
9. PENETRATION OF PIPES, CONDUIT, ETC., IN WALLS AND/OR FLOORS REQUIRING PROTECTED OPENINGS SHALL BE FIRE STOPPED. MATERIAL SHALL BE A UL LISTED & TESTED ASSEMBLY APPROVED BY THE STATE FIRE MARSHAL.
10. SEAL ALL PIPE PENETRATIONS THRU FLOORS WATERTIGHT.
11. DRAWINGS SHALL BE CONSIDERED DIAGRAMMATIC ONLY. CONTRACTOR SHALL FIELD VERIFY WHERE POSSIBLE, EXACT LOCATIONS, SIZES, AND ELEVATIONS OF ALL ITEMS SHOWN PRIOR TO THE INSTALLATION OF ANY NEW WORK.
12. THE DRAWINGS ARE NOT INTENDED TO SHOW EVERY OFFSET OR FITTING OR EVERY STRUCTURAL DIFFICULTY THAT MAY BE ENCOUNTERED DURING INSTALLATION OF THE WORK. LOCATION OF ALL ITEMS NOT DEFINITELY FIXED BY DIMENSIONS ARE APPROXIMATE ONLY. EXACT LOCATIONS NECESSARY TO SECURE BEST CONDITIONS AND RESULTS MUST BE DETERMINED AT THE JOB SITE AND SHALL HAVE THE APPROVAL OF THE ARCHITECT BEFORE BEING INSTALLED.
13. ALL VALVES SHOWN SHALL BE FULL LINE SIZE UNLESS OTHERWISE NOTED.
14. CLOSELY COORDINATE ALL WORK WITH OTHER TRADES PRIOR TO TRENCHING OR INSTALLATION OF NEW. IDENTIFY SIZE AND LOCATIONS OF ALL PENETRATIONS THROUGH FOUNDATIONS, WALLS OR ROOFS PRIOR TO FABRICATION OF ANY SYSTEMS OR ORDERING MATERIALS AFFECTED BY POSSIBLE COORDINATION CONFLICTS.
15. CONCRETE ANCHORS SHALL BE 3/8" HILTI KBTZ, SEE STRUCTURAL PLAN # S0-1.10.
16. PIPING SHALL BE SUPPORTED AND BRACED IN STRICT COMPLIANCE WITH DIVISION 22 SPECIFICATIONS.
17. PENETRATION OF PIPES, CONDUITS, ETC., IN WALLS AND/OR FLOORS REQUIRING PROTECTED OPENINGS SHALL BE FIRE STOPPED. MATERIAL SHALL BE A TESTED ASSEMBLY APPROVED BY THE STATE FIRE MARSHAL.
18. ALL NEW SANITARY WASTE PIPING SHOWN SHALL BE SLOPED AT 1/4" PER FOOT MINIMUM UNLESS OTHERWISE NOTED ON PLANS. WHERE SLOPES LESS THAN 1/4" PER FOOT ARE INDICATED, CONTRACTOR SHALL SLOPE NEW PIPING UNIFORMLY BETWEEN UPPER TERMINAL OF PIPE AND THE POINT OF CONNECTION TO THE SITE PIPING (AS INDICATED ON THE CIVIL PLANS) TO ACHIEVE MAXIMUM SLOPE POSSIBLE AND IN NO CASE SHALL THE PIPING BE SLOPED LESS THAN THE MINIMUM INDICATED.
19. CONCEAL ALL PIPING IN WALL FURRING, PARTITIONS, ETC., EXCEPT AT MECHANICAL ROOMS.
20. REFER TO ARCHITECTURAL DRAWINGS FOR BUILDING DIMENSIONS AND EXACT LOCATIONS OF PLUMBING FIXTURES.
21. THE CONNECTION OF NATURAL GAS LINES TO HVAC EQUIPMENT SHALL, BE FULL LINE SIZE & INCLUDE A LINE SIZE UNION, GAS SHUT-OFF VALVE AND A MINIMUM 6" LONG DIRT LEG WITH ACCESSIBLE END CAP.
22. PIPE, PLUMBING FITTINGS, FIXTURES, SOLDER AND FLUX SHALL COMPLY WITH LEAD FREE REQUIREMENTS OF THE CALIFORNIA HEALTH AND SAFETY CODE SECTION 116875. PROVIDE PRODUCTS LISTED AND LABELED AS COMPLYING WITH NSF 61, ANNEX G, OR PROVIDE OTHER EVIDENCE OF COMPLIANCE WITH THE CALIFORNIA HEALTH AND SAFETY CODE SECTION 116875. PROVIDE PRODUCT SUBMITTAL INFORMATION PROVING COMPLIANCE WITH LEAD FREE REQUIREMENTS. ALSO REFER TO SPECIFICATION SECTION 22 11 16.

PIPING, DUCTWORK & ELECTRICAL DISTRIBUTION SYSTEM BRACING NOTE

PIPING, DUCTWORK, AND ELECTRICAL DISTRIBUTION SYSTEMS SHALL BE BRACED TO COMPLY WITH THE FORCES AND DISPLACEMENTS PRESCRIBED IN ASCE 7-10 SECTION 13.3 AS DEFINED IN ASCE 7-10 SECTION 13.6.5.6, 13.6.7, 13.6.8, AND 2016 CBC, SECTIONS 1616A.1.23, 1616A.1.24, 1616A.1.25 AND 1616A.1.26.

THE METHOD OF SHOWING BRACING AND ATTACHMENTS TO THE STRUCTURE FOR THE IDENTIFIED DISTRIBUTION SYSTEM ARE AS NOTED BELOW. WHEN BRACING AND ATTACHMENTS ARE BASED ON PREAPPROVED INSTALLATION GUIDE (e.g., SMACNA OR OSHPD OPM). COPIES OF THE BRACING SYSTEM INSTALLATION GUIDE OR MANUAL SHALL BE AVAILABLE ON THE JOBSITE PRIOR TO THE START OF AND DURING THE HANGING AND BRACING OF THE DISTRIBUTION SYSTEMS. THE STRUCTURAL ENGINEER OF RECORD SHALL VERIFY THE ADEQUACY OF THE STRUCTURE TO SUPPORT THE HANGER AND BRACE LOADS.

MECHANICAL PIPING (MP), MECHANICAL DUCTS (MD), PLUMBING PIPING (PP), ELECTRICAL DISTRIBUTION SYSTEMS (E):

MP ☐ MD ☐ PP ☐ E ☐ — OPTION 1: DETAILED ON THE APPROVED DRAWINGS WITH PROJECT SPECIFIC NOTES AND DETAILS

MP ☐ MD ☐ PP ☒ E ☐ — OPTION 2: SHALL COMPLY WITH THE APPLICABLE OSHPD PRE-APPROVED (OPM #) # 0043-13

MP ☐ MD ☐ PP ☐ — OPTION 3: SHALL COMPLY WITH THE SMACNA SEISMIC RESTRAINT MANUAL. OSHP EDITION (2009), INCLUDING ANY ADDENDA. FASTENERS AND OTHER ATTACHMENTS NOT SPECIFICALLY IDENTIFIED IN THE SMACNA SEISMIC RESTRAINT MANUAL, OSHPD EDITION, ARE DETAILED ON THE APPROVED DRAWINGS WITH PROJECT SPECIFIC NOTES AND DETAILS. THE DETAILS SHALL ACCOUNT FOR THE APPLICABLE SEISMIC HAZARD LEVEL ____ AND CONNECTION LEVEL ____ FOR THE PROJECT AND CONDITIONS.

PLUMBING LEGEND

SYMBOL	ABBREVIATION	DESCRIPTION
	ABV CLG	ABOVE CEILING
	BFP	BACKFLOW PREVENTER ASSEMBLY
	BLV	BALANCING VALVE
	BLW	BELOW
	BV	BALL VALVE
		BRANCH - TOP CONNECTION
		BRANCH - BOTTOM CONNECTION
or		BRANCH - SIDE CONNECTION
	CLG	CEILING
	COP	CAP ON END OF PIPE
	RD	ROOF DRAIN
	CL	CENTER LINE
	CKV	CHECK VALVE
	CW	COLD WATER
CD	CD	CONDENSATE DRAIN LINE
CO CO	CO	CLEANOUT
°F	°F	DEGREES FAHRENHEIT
	FR	FROM
	FU	FIXTURE UNIT
Ø	CO	CLEANOUT
	FD	FLOOR DRAIN
	FS	FLOOR SINK
		FLOW IN DIRECTION OF ARROW
FV , FT		FLUSH VALVE , FLUSH TANK
(FA) , (TA)		FROM ABOVE , TO ABOVE
(FB) , (TB)		FROM BELOW , TO BELOW
	GSOV	GAS SHUT-OFF VALVE
	HDR	HEADER
	IND	INDIRECT WASTE
NG	NG,G	NATURAL GAS - LOW PRESSURE
MPG	MPG	NATURAL GAS - MEDIUM PRESSURE (5 PSI)
	GPR	GAS PRESSURE REGULATOR
	GPM	GALLONS PER MINUTE
Ø	CO	CLEANOUT
	HB	HOSE BIBB
	HW	HOT WATER PIPING
	HWR	HOT WATER RETURN PIPING
	(N) , (E)	NEW , EXISTING
	(NTS)	NOT TO SCALE
	OH	OVERHEAD
	OD	OVERFLOW DRAIN
	POC	POINT OF CONNECTION
	PG	PRESSURE GAUGE
P & TRV	P & TRV	PRESSURE & TEMPERATURE RELIEF VALVE PIPING
RWL	RWL	RAINWATER LEADER
	IE.:	INVERT ELEVATION
	(R) , (D)	RISE , DROP
		RISER DOWN (ELBOW)
		RISER UP (ELBOW)
	(R) (D)	RISE OR DROP
	SOV	SHUT-OFF VALVE
	S, W	SOIL, WASTE OR SANITARY SEWER ABOVE FLOOR
	S, W	SOIL, WASTE OR SANITARY SEWER BELOW FLOOR
	SMR	SIMILAR
SD	SD	STORM DRAIN
SS	SS	SANITARY SEWER
	TH	THERMOMETER
	TP w/AD	TRAP PRIMER VALVE IN WALL BOX WITH ACCESS DOOR. SEE PLUMBING DETAILS.
TP	TP, TPW	TRAP PRIMER PIPING
	(TYP.)	TYPICAL
	UN	UNION OR FLANGE
	VB	VALVE IN VALVE BOX (REFER TO SPECIFICATIONS FOR VALVE TYPE).
	V	VENT PIPING
V , VR , VTR		VENT , VENT RISER , VENT THRU ROOF
	WCO	WALL CLEANOUT
	WHA	WATER HAMMER ARRESTER
	TDL	TOTAL DEVELOPED LENGTH

MEP COMPONENT ANCHORAGE NOTE

ALL MECHANICAL, PLUMBING, AND ELECTRICAL COMPONENTS SHALL BE ANCHORED AND INSTALLED PER THE DETAILS ON THE DSA APPROVED CONSTRUCTION DOCUMENTS. WHERE NO DETAIL IS INDICATED, THE FOLLOWING COMPONENTS SHALL BE ANCHORED OR BRACED TO MEET THE FORCE AND DISPLACEMENT REQUIREMENTS PRESCRIBED IN THE 2016 CBC, SECTIONS 1616A.1.18 THROUGH 1616A.1.26 AND ASCE 7-10 CHAPTER 13, 26 AND 30.

1. ALL PERMANENT EQUIPMENT AND COMPONENTS.
2. TEMPORARY OR MOVABLE EQUIPMENT THAT IS PERMANENTLY ATTACHED (e.g. HARD WIRED) TO THE BUILDING UTILITY SERVICES SUCH AS ELECTRICITY, GAS OR WATER.
3. MOVABLE EQUIPMENT WHICH IS STATIONED IN ONE PLACE FOR MORE THAN 8 HOURS AND HEAVIER THAN 400 POUNDS ARE REQUIRED TO BE ANCHORED WITH TEMPORARY ATTACHMENTS.

THE ATTACHMENT OF THE FOLLOWING MECHANICAL AND ELECTRICAL COMPONENTS SHALL BE POSITIVELY ATTACHED TO THE STRUCTURE, BUT THE ATTACHMENT NEED NOT BE DETAILED ON THE PLANS. THESE COMPONENTS SHALL HAVE FLEXIBLE CONNECTIONS PROVIDED BETWEEN THE COMPONENT AND ASSOCIATED DUCTWORK, PIPING, AND CONDUIT.

A. COMPONENTS WEIGHING LESS THAN 400 POUNDS AND HAVE A CENTER OF MASS LOCATED 4 FEET OR LESS ABOVE THE ADJACENT FLOOR OR ROOF LEVEL THAT DIRECTLY SUPPORT THE COMPONENT.

B. COMPONENTS WEIGHING LESS THAN 20 POUNDS, OR IN THE CASE OF DISTRIBUTION SYSTEMS, LESS THAN 5 POUNDS PER FOOT, WHICH ARE SUSPENDED FROM A ROOF OR FLOOR OR HUNG FROM A WALL.

FOR THOSE ELEMENTS THAT DO NOT REQUIRE DETAILS ON THE APPROVED DRAWINGS, THE INSTALLATION SHALL BE SUBJECT TO THE APPROVAL OF THE DESIGN PROFESSIONAL IN GENERAL RESPONSIBLE CHARGE OR STRUCTURAL ENGINEER DELEGATED RESPONSIBILITY AND THE DSA DISTRICT STRUCTURAL ENGINEER. THE PROJECT INSPECTOR WILL VERIFY THAT ALL COMPONENTS AND EQUIPMENT HAVE BEEN ANCHORED IN ACCORDANCE WITH ABOVE REQUIREMENTS.

PLUMBING SHEET LIST

SHEET NUMBER	SHEET TITLE
P0-1	GENERAL NOTES, LEGENDS & ABBREV.
P0-2	PLUMBING SCHEDULES
P0-3	PLUMBING SITE PLAN
P1-1	PLUMBING FIRST FLOOR PLAN - GRAVITY
P1-2	PLUMBING FIRST FLOOR PLAN - PRESSURE
P2-1	PLUMBING SECOND FLOOR PLAN - GRAVITY
P2-2	PLUMBING SECOND FLOOR PLAN - PRESSURE
P3-1	PLUMBING ROOF PLAN
P4-1	PLUMBING ENLARGED PLANS
P4-2	PLUMBING ENLARGED PLANS
P5-1	PLUMBING HOT & COLD WATER AND WASTE & VENT RISER DIAGRAMS
P5-2	PLUMBING NATURAL GAS & STORM DRAIN RISER DIAGRAMS
P7-1	PLUMBING DETAILS
P7-2	PLUMBING DETAILS

IDENTIFICATION STAMP
DIV. OF THE STATE ARCHITECT
APP. 03-119458 INC:
REVIEWED FOR
SS ☑ FLS ☑ ACS ☑
DATE:05/23/2019

DIVISION OF THE STATE ARCHITECT
355 South Grand Avenue, Suite 2100
Los Angeles, CA 90012
ph: (213) 897-3995 fx:(213) 897-3159
agency

tBP architecture planning interiors
tBP/Architecture
4611 Teller Avenue
Newport Beach, CA 92660
ph: 949.673.0300 fx: 949.732.3895
architect

CAPITAL ENGINEERING CONSULTANTS, INC.
LONG BEACH, CALIFORNIA
CM - RH/SL/TS 171221.00
PM - DESIGN TEAM PROJECT NO.

REGISTERED PROFESSIONAL ENGINEER
CHRISTOPHER V. MERCURIO
M 34011
EXPIRES 3/30/20
MECHANICAL
STATE OF CALIFORNIA
DATE SIGNED: 04/05/19
consultant

COMPTON COLLEGE
INSTRUCTIONAL BUILDING No.2
COMPTON COMMUNITY COLLEGE DISTRICT
1111 E. ARTESIA BLVD. COMPTON, CA.
owner

tBP project number: 20998.00
file name:
drawn by: checked by:
date: 11 / 20 / 2018
rev: date: description:

THIS DRAWING AND THE DESIGNS, DEPICTIONS, IDEAS AND OTHER INFORMATION CONTAINED HEREIN CONSTITUTE UNPUBLISHED WORK OF tBP/ARCHITECTURE AND SHALL REMAIN PROPERTY OF tBP/ARCHITECTURE IN PERPETUITY. NO PART THEREOF SHALL BE REPRODUCED, DISCLOSED, DISTRIBUTED, SOLD, PUBLISHED OR OTHERWISE USED IN ANY WAY WITHOUT THE ADVANCED EXPRESS WRITTEN CONSENT OF tBP/ARCHITECTURE.

drawing title:
GENERAL NOTES, LEGENDS & ABBREV.

drawing no.:
P0-1
drawing of

4/8/2019 6:06:21 PM

PLUMBING FIXTURE SPECIFICATION & CONNECTION SCHEDULE

ADA	SYMBOL	FIXTURE	FIXTURE MANUFACTURER AND MODEL No.	FAUCET OR VALVE MANUFACTURER AND MODEL No.	TRIM MANUFACTURER AND MODEL No.	REMARKS	VENT	WASTE BRANCH	WASTE OUTLET	COLD WATER BRANCH	COLD WATER OUTLET	HOT WATER BRANCH	HOT WATER OUTLET
	WC-1	WATER CLOSET WALL MOUNTED FLUSH VALVE	"KOHLER" KINGSTON 1.28, NO. K-4325, WALL HUNG, VITREOUS CHINA, ELONGATED, SIPHON JET ACTION, 1-1/2" TOP SPUD. 1.28 GPF	"SLOAN" ROYAL 111 SMO-1.28-DFB-OR, ADA COMPLIANT, 1.28 GPF, EXPOSED SENSOR BATTERY OPERATED.	SEAT: "CHURCH" MODEL 295SSCT OR "BEMIS" MODEL 1955SSCT. PROVIDE WITH SELF- SUSTAINING CONCEALED CHECK HINGES, ONE PIECE STAINLESS STEEL POST HINGES, WHITE COLOR. CARRIER: "JAY R. SMITH" 100 OR 200 SERIES OR 500# RATED "ZURN" Z1201 AND Z1202 SERIES PROVIDE REAR SUPPORT LUG AND ANCHOR FOOT ASSEMBLY.	MOUNT AT HEIGHT INDICATED ON ARCHITECTURAL DRAWINGS. WHERE USED FOR CBC ACCESSIBLE WATER CLOSETS, THE FLUSH VALVE HANDLE SHALL BE MOUNTED ON THE WIDE SIDE OF THE WATER CLOSET ENCLOSURE.	2"	4"	4"	1-1/4"	1"	--	--
	WC-2	WATER CLOSET WALL MOUNTED FLUSH VALVE ACCESSIBLE	"KOHLER" KINGSTON 1.28, NO. K-4325, WALL HUNG, VITREOUS CHINA, ELONGATED, SIPHON JET ACTION, 1-1/2" TOP SPUD. 1.28 GPF	"SLOAN" ROYAL 111 SMO-1.28-DFB-OR, ADA COMPLIANT, 1.28 GPF, EXPOSED SENSOR BATTERY OPERATED.	SEAT: "CHURCH" MODEL 295SSCT OR "BEMIS" MODEL 1955SSCT. PROVIDE WITH SELF- SUSTAINING CONCEALED CHECK HINGES, ONE PIECE STAINLESS STEEL POST HINGES, WHITE COLOR. CARRIER: "JAY R. SMITH" 100 OR 200 SERIES OR 500# RATED "ZURN" Z1201 AND Z1202 SERIES PROVIDE REAR SUPPORT LUG AND ANCHOR FOOT ASSEMBLY.	MOUNT AT HEIGHT INDICATED ON ARCHITECTURAL DRAWINGS. WHERE USED FOR CBC ACCESSIBLE WATER CLOSETS, THE FLUSH VALVE HANDLE SHALL BE MOUNTED ON THE WIDE SIDE OF THE WATER CLOSET ENCLOSURE.	2"	4"	4"	1-1/4"	1"	--	--
	UR-1	URINAL WALL MOUNTED FLUSH VALVE ACCESSIBLE	"KOHLER" BARDON 1/8 GPF NO. K-4991-ET WALL HUNG, VITREOUS CHINA, SIPHON JET ACTION. 3/4" TOP SPUD, 2" THREADED OUTLET. .125 GPF	"SLOAN" ROYAL 186 SMO-0.125-DBP-OR, 0.125 GPF EXPOSED BATTERY OPERATED SENSOR, 3/4" TOP SPUD FLUSH VALVE.	CARRIER: "JAY R. SMITH" 637 SERIES OR "ZURN" Z1222	MOUNT AT HEIGHT INDICATED ON ARCHITECTURAL DRAWINGS.	1-1/2"	2"	2"	1"	3/4"	--	--
	L-1	LAVATORY WALL MOUNTED HOT AND COLD WATER STD/ACCESSIBLE	"KOHLER" KINGSTON NO. K-2005 WALL HUNG, VITREOUS CHINA WITH CONTOURED BACK AND SIDE SPLASH SHIELDS, FRONT OVERFLOW, CONCEALED ARM RECESS, 4" CENTERS, 21-1/4" x 18-1/8" D SHAPED BOWL.	"CHICAGO" 3600-E2805AB FAUCET, PUSH LEVER WITH AERATOR WITH 0.5 GPM FLOW RATE. WITH VANDAL RESISTANT ECONO-FLO SPRAY OUTLET. WITH IPS CONNECTIONS, ADA COMPLIANT.	ADA COMPLIANT. INSTALL INSULATION PROTECTION FOR EXPOSED PIPES AND FITTINGS UNDER FIXTURE LAVATORY GRID DRAIN WITH 1-1/4" OFFSET TAILPIECE, INTEGRAL PERFORATED GRID NO. 7723.018, CHROME FINISH. MOUNT P-TRAP FLUSH TO WALL. CARRIER: "JAY R. SMITH" 0700 OR ZURN Z1231	MOUNT AT HEIGHT INDICATED ON ARCHITECTURAL DRAWINGS. PROVIDE CONCEALED ARMS AND FLOOR SUPPORT, WITH FEET OF SUPPORT SECURELY ANCHORED TO FLOOR. IN ADDITION ANCHOR TOP OF SUPPORT TO WALL CONSTRUCTION.	1-1/2"	2"	1-1/2"	3/4"	1/2"	3/4"	1/2"
	S-1	SINK COUNTER MOUNTED HOT AND COLD WATER	"JUST" SL-ADA-2131-A-GR 21" FRONT TO BACK, 31" WIDE x 6" DEPTH OVERALL. 18 GAUGE STAINLESS STEEL, LEDGE BACK WITH SELF- RIM. PROVIDE 3 HOLES FAUCET HOLE. PROVIDE CENTER REAR DRAIN LOCATION, FACTORY ADHERED VANDAL RESISTANT BACKING PLATE AT FAUCET, AND SLOT AT FAUCET FOR VANDAL RESISTANT BACKING PLATE SHALL BE 14 GA SS FORMED AS CHANNEL.	"CHICAGO" ECAST MODEL 201-AE35-317XKABCP GOOSENECK FAUCET, 1.5 GPM VANDAL RESISTANT, FLOW AERATOR AND RIGID/SWING FAUCET, 4" CENTER. PROVIDE VANDAL RESISTANT PIN IN FAUCET, ARRANGED TO MATE WITH SLOT IN SINK.	"JUST" J-ADA-35-SSF-VR DRAIN SYSTEM. INSTALL P-TRAP FLUSH TO WALL. "JUST" JTS-150 P-TRAP, SWIVEL STYLE WITH CLEAN OUT ADA COMPLIANT. INSTALL INSULATION PROTECTION FOR EXPOSED PIPES AND FITTINGS UNDER FIXTURE		1-1/2"	2"	1-1/2"	3/4"	1/2"	3/4"	1/2"
	S-2	SINK COUNTER MOUNTED HOT AND COLD WATER	"JUST" SL-ADA-17519A-GR 17.5"FRONT TO BACK, 19"WIDE x 4.5" DEEP OVERALL. WITH MODIFIED 3.5" WIDE REAR FLANGE. 18 GAUGE STAINLESS STEEL, LEDGE BACK WITH SELF- RIM. PROVIDE SINGLE FAUCET HOLE. PROVIDE CENTER REAR DRAIN LOCATION, FACTORY ADHERED VANDAL RESISTANT BACKING PLATE AT FAUCET, AND SLOT AT FAUCET FOR VANDAL RESISTANT BACKING PLATE SHALL BE 14 GA SS FORMED AS CHANNEL.	"CHICAGO" ECAST MODEL 201-AE35-317XKABCP GOOSENECK FAUCET, 1.5 GPM VANDAL RESISTANT, FLOW AERATOR AND RIGID/SWING FAUCET, 4" CENTER. PROVIDE VANDAL RESISTANT PIN IN FAUCET, ARRANGED TO MATE WITH SLOT IN SINK.	"JUST" J-ADA-35-SSF-VR DRAIN SYSTEM. INSTALL P-TRAP FLUSH TO WALL. "JUST" JTS-150 P-TRAP, SWIVEL STYLE WITH CLEAN OUT ADA COMPLIANT. INSTALL INSULATION PROTECTION FOR EXPOSED PIPES AND FITTINGS UNDER FIXTURE	"INSINK-ERATOR" BADGER 1 1/3 HP, 120 HP, 60 HZ, 6.3 AMP (AVG) WEIGHT 13 LBS.	1-1/2"	2"	1-1/2"	3/4"	1/2"	3/4"	1/2"
	SS-1	SERVICE SINK FLOOR MOUNTED HOT AND COLD WATER	"ACORN TCR-28, TERRAZO-WARE, 28"X28"X12" DEEP FLOOR MOUNTED, TERRAZZO WITH STAINLESS STEEL CAP. UNIT SHALL INCLUDE MODEL KH36 HOSE WITH WALL HANGER, KMH MOP HANGER WITH 3 SPRING LOADED GRIP ON A STAINLESS STEEL BRACKET.	"CHICAGO" MODEL 897-CP WALL MOUNTED POLISHED CHROME FAUCET WITH VACUUM BREAKER, ADJUSTABLE TOP BRACE AND 3/4" MALE THREADED HOSE OUTLET.		AS PART OF ROUGH-IN FOR FAUCET, PROVIDE SUITABLE BLOCKING FOR TOP BRACE. PROVIDE CAP WITH FLANGE ON. SIDES ADJACENT TO WALLS.	2"	3"	3"	3/4"	3/4"	3/4"	3/4"
	DF-1	DRINKING FOUNTAIN WALL MOUNTED STD/ACCESSIBLE DUAL HEIGHT	"HAWS" H1117.8 HI-LO WALL MTD BARRIER-FREE WATER COOLER, ADA COMPLIANT, 14 GAUGE 304 SS, 8 GPH, 115 V, 60 HZ, 5 FLA. PROVIDE WITH HCR8 WATER CHILLER AND MTGFR.17 IN-WALL MOUNTING FRAME.	INTEGRAL	WITH P-TRAP	SURPORT SYSTEM: MODEL 6717 MOUNTING PLATE AND 6800 SUPPORT CARRIER. PROVIDE MANUFACTURER'S INTERNAL SUPPORT SYSTEM. WHERE INSTALLED ON CONCRETE OR CMU WALL, PROVIDE TWO MODEL 6700 MOUNTING PLATES & INSTALL WITH ONE PLATE ON EACH SIDE OF WALL. SET AT HEIGHT INDICATED ON ARCH DWGS.	1-1/2"	2"	1-1/2"	1/2"	1/2"	-	-
	HB-1	HOSE BIBB	EXTERIOR WALL MOUNTED - ACORN MODEL 8126CR-LF	WITH INTEGRAL VACUUM BREAKER PROTECTED, CARTRIDGE OPERATED HOSE VALVE WITH LOCK SHIELD BONNET AND REMOVABLE KEY HANDLE.		SET HEIGHT AT 18" ABOVE FINISHED FLOOR	-	-	-	3/4"	3/4"	-	-
	HB-2	HOSE BIBB	INTERIOR WALL MOUNTED - ACORN MODEL 8121CP-LF	WITH INTEGRAL VACUUM BREAKER PROTECTED, CARTRIDGE OPERATED HOSE VALVE WITH LOCK SHIELD BONNET AND REMOVABLE KEY HANDLE.		SET HEIGHT AT 18" ABOVE FINISHED FLOOR	-	-	-	3/4"	3/4"	-	-
	WH-1	WALL HYDRANT	RECESSED WALL HYDRANT: ACORN MODEL 8151	RECESSED WALL HOSE BOX WITH DOOR AND VACUUM BREAKER. BOX IS ONE PIECE CAST CONSTRUCTION WITH BUILT-IN LOIP. WALL FLANGE IS CAST ALUMINUM WITH PRIME COAT FINISH SECURED WITH VANDAL RESISTANCE SCREWS. DOOR AND FRAME ARE OF CAST ALUMINUM ALLOW WITH CYLINDER KEYED LOCK. VALVE SHALL BE CATRIDGE TYPE WITH VANDAL RESISTANT LOCK SHIELD LOOSE KEY HANDLE AND SCREWDRIVE STOP.		SET HEIGHT AT 18" ABOVE FINISHED FLOOR	-	-	-	3/4"	3/4"	-	-
	TP-1	TRAP PRIMER	MIFAB "M-500" SERIES, PRECISION PLUMBING PRODUCTS "PRIME-RITE"				-	-	-	1/2"	1/2"	-	-
	FD-1	FLOOR DRAIN	GENERAL SERVICE FD - JR SMITH MODEL 2005-Y, OR EQUAL, WITH TYPE "A" STRAINER FOR EXPOSED CONCRETE AND TYPE "B" STRAINER FOR TILE FLOOR. PROVIDE NICKLE BRONZE TRIM.				2"	2"	2"	-	-	-	-
	RR-1	ROOF RECEPTOR	JR SMITH #3960 CAST IRON RECEPTOR WITH WATER DAM AND DOME BOTTOM STRAINER, NO-HUB OUTLET, SECURED WITH VANDAL PROOF SCREWS.				2"	2"	2"	-	-	-	-
	RD-1	ROOF DRAIN	JAY R. SMITH MODEL 1010Y OR EQUAL	SECURE DECK PLATE TO ROOF. PROVIDE 6" HIGH CAST IRON VANDAL PROOF DOME TYPE STRAINER INLET AND CLAMPING COLLAR. PROVIDE WITH EXTENSION AS REQUIRED TO SUIT JOB CONDITIONS.			-	SEE PLAN	SEE PLAN	-	-	-	-
	OD-1	OVERFLOW DRAIN	JAY R. SMITH MODEL 1080Y WITH 2" HIGH DAM OR EQUAL	SECURE DECK PLATE TO ROOF. PROVIDE 6" HIGH CAST IRON VANDAL PROOF DOME TYPE STRAINER INLET AND CLAMPING COLLAR. PROVIDE WITH 2" OR 4" WATER DAM AS REQUIRED TO SUIT JOB CONDITIONS. PROVIDE WITH EXTENSION AS REQUIRED TO SUIT JOB CONDITIONS.			-	SEE PLAN	SEE PLAN	-	-	-	-
							-	SEE PLAN	SEE PLAN	-	-	-	-
	BFP-1	BACKFLOW PREVENTER	REDUCED PRESSURE BACKFLOW PREVENTER WITH SHUT-OFF VALVES, STRAINER AND AIR GAPS AND ELBOWS # 909AGF				-	SEE PLAN	SEE PLAN	-	-	-	-

GAS PRESSURE REGULATOR SCHEDULE

UNIT	LOCATION	QTY	"MFR" MODEL NO.	CAPACITY (CFH)	INLET PRESSURE	OUTLET PRESSURE	SPRING NO.	ORIFICE SIZE	NOTES
GPR 1	LEVEL 1 SEE PLAN	1	AMERICAN 1853B	3,520	5 PSI	8.5" W.C.	71424P019	7/8"	PROVIDE REGULATOR WITH OVER-PRESSURE SHUTOFF, WT.= 20 LBS. INSTALL SEISMIC GAS SHUT-OFF VALVE UPSTREAM OF PRESS. REGULATOR BY PACIFIC SEISMIC PRODUCTS # 314, 2" HORIZONTAL SEISMIC SHUTOFF VALVE

GAS WATER HEATER SCHEDULE

UNIT	LOCATION	"MFR" MODEL NO.	QTY.	STORAGE CAPACITY GALLONS	MBTU INPUT	RECOVERY GALLONS @ 100 F RISE	MAX. TEMP SETTING	GAS CONN	VOLTAGE	WEIGHT (FULL)	PIPING DETAIL	MOUNTING DETAIL	NOTES
GWH 1	JANITOR RM ROOM 113	LOCHINVAR CLN 120 080	1	81	120	115	120	3/4"	120V/1□	1,300	6 P7-01	3 P7-02	80% THERMAL EFF.,MEETS SCAQMD RULE 1146.2 DIMENSION: 64"HIGH x 28"DIA.

EXPANSION TANK SCHEDULE

UNIT	LOCATION	QTY	"MFR" MODEL NO.	VOLUME	WEIGHT	DETAIL	NOTES
ET 1	JANITOR RM ROOM 113	1	AMTROL THERM-X-TROL ST-5C	2.0 GAL	10 LBS	6 P7-01	150 PSIG WORKING PRESS.

CIRCULATING PUMP SCHEDULE

UNIT	LOCATION	QTY	"MFR" MODEL NO.	GPM	FT OF HEAD	HP	VOLT/PH/HZ	CONTROLS	NOTES
CP 1	JANITOR RM ROOM 113	1	GRUNDFOS ALPHA 15-55 SF	5	10	1/25	115/1/60HZ	7-DAY/24-HR TIME CLOCK W/ AQUASTAT	WT 8 LBS, WITH AUTO-ADAPT

IDENTIFICATION STAMP
DIV. OF THE STATE ARCHITECT
APP. 03-119458 INC:
REVIEWED FOR
SS ☑ FLS ☑ ACS ☑
DATE: 05/23/2019

DIVISION OF THE STATE ARCHITECT
355 South Grand Avenue, Suite 2100
Los Angeles, CA 90012
ph: (213) 897-3995 fx:(213) 897-3159

agency

tBP architecture planning interiors

tBP/Architecture
4611 Teller Avenue
Newport Beach, CA 92660
ph: 949.673.0300 fx: 949.732.3895

architect

CAPITAL ENGINEERING CONSULTANTS, INC.
LONG BEACH, CALIFORNIA
CM - RH/SL/TS 171221.00
PM - DESIGN TEAM PROJECT NO.

REGISTERED PROFESSIONAL ENGINEER
CHRISTOPHER V. MERCURIO
M 34011
EXPIRES 3/30/20
MECHANICAL
STATE OF CALIFORNIA

DATE SIGNED: 04/05/19

consultant

COMPTON COLLEGE
INSTRUCTIONAL BUILDING No.2

COMPTON COMMUNITY COLLEGE DISTRICT
1111 E. ARTESIA BLVD. COMPTON, CA.

owner

tBP project number: 20998.00

file name:

drawn by: checked by:

date: 11 / 20 / 2018

rev: date: description:

THIS DRAWING AND THE DESIGNS, DEPICTIONS, IDEAS AND OTHER INFORMATION CONTAINED HEREIN CONSTITUTE UNPUBLISHED WORK OF tBP/ARCHITECTURE AND SHALL REMAIN PROPERTY OF tBP/ARCHITECTURE IN PERPETUITY. NO PART THEREOF SHALL BE REPRODUCED, DISCLOSED, DISTRIBUTED, SOLD, PUBLISHED OR OTHERWISE USED IN ANY WAY WITHOUT THE ADVANCED EXPRESS WRITTEN CONSENT OF tBP/ARCHITECTURE.

drawing title:
PLUMBING SCHEDULES

drawing no.:
P0-2

drawing of

4/8/2019 6:06:22 PM

IB #1
FFE = 62.40

3"SD (950 SF)
I.E. -3'-3"

GAS PRESSURE REDUCING VALVE & SEISMIC SOV BELOW STAIR

2"MPG

2"MPG

3"SD (670 SF)
I.E. -2'-0"

4"SD (4700 SF)
I.E. -3'-3"

4"SD (2400 SF)
I.E. -3'-3"

4"SD (1800 SF)
I.E. -3'-3"

4"SD (2500 SF)
I.E. -3'-3"

4" SS
I.E.= -3'-3"

2-1/2" CW

4"SD
(3800 SF)
I.E. -3'-3"

3"SD (200 SF)
I.E. -3'-3"

4" SS
I.E.= -3'-3"

4"SD (1600 SF)
I.E. -3'-3"

E

D

C

B

C

Q

SHEET NOTES

1. DISCONNECT AND REMOVE (E) GAS PIPING. VALVE AND CAP PIPE AT MAIN. PROVIDE VALVE BOX FOR VALVED STUB.
2. REMOVE (E) GAS PIPING BELOW GRADE.
3. PROTECT (E) GAS PIPING IN PLACE DURING CONSTRUCTION.

NORTH

PLUMBING SITE PLAN

SCALE1/16" = 1'-0"

4/8/2019 6:06:23 PM

IDENTIFICATION STAMP
DIV. OF THE STATE ARCHITECT
APP. 03-119458 INC:
REVIEWED FOR
SS ☑ FLS ☑ ACS ☑
DATE:05/23/2019

DIVISION OF THE STATE ARCHITECT
355 South Grand Avenue, Suite 2100
Los Angeles, CA 90012
ph: (213) 897-3995 fx:(213) 897-3159

agency

tBP
architecture
planning
interiors

tBP/Architecture
4611 Teller Avenue
Newport Beach, CA 92660
ph: 949.673.0300 fx: 949.732.3895

architect

CAPITAL
ENGINEERING CONSULTANTS, INC.
LONG BEACH, CALIFORNIA
CM - RH/SL/TS — PM - DESIGN TEAM
171221.00 — PROJECT NO.

REGISTERED PROFESSIONAL ENGINEER
CHRISTOPHER V. RIEGER
M 34011
Expiration 06/30/19
MECHANICAL
STATE OF CALIFORNIA

DATE SIGNED: 04/05/19

consultant

COMPTON COLLEGE
INSTRUCTIONAL BUILDING No.2
COMPTON COMMUNITY COLLEGE DISTRICT
1111 E. ARTESIA BLVD. COMPTON, CA.

owner

tBP project number: 20998.00
file name:
drawn by: checked by:
date: 11 / 20 / 2018

rev:	date:	description:

THIS DRAWING AND THE DESIGNS, DEPICTIONS, IDEAS AND OTHER INFORMATION CONTAINED HEREIN CONSTITUTE UNPUBLISHED WORK OF tBP/ARCHITECTURE AND SHALL REMAIN PROPERTY OF tBP/ARCHITECTURE IN PERPETUITY. NO PART THEREOF SHALL BE REPRODUCED, DISCLOSED, DISTRIBUTED, SOLD, PUBLISHED OR OTHERWISE USED IN ANY WAY WITHOUT THE ADVANCED EXPRESS WRITTEN CONSENT OF tBP/ARCHITECTURE.

drawing title:
PLUMBING SITE PLAN

drawing no.:
P0-3
drawing of

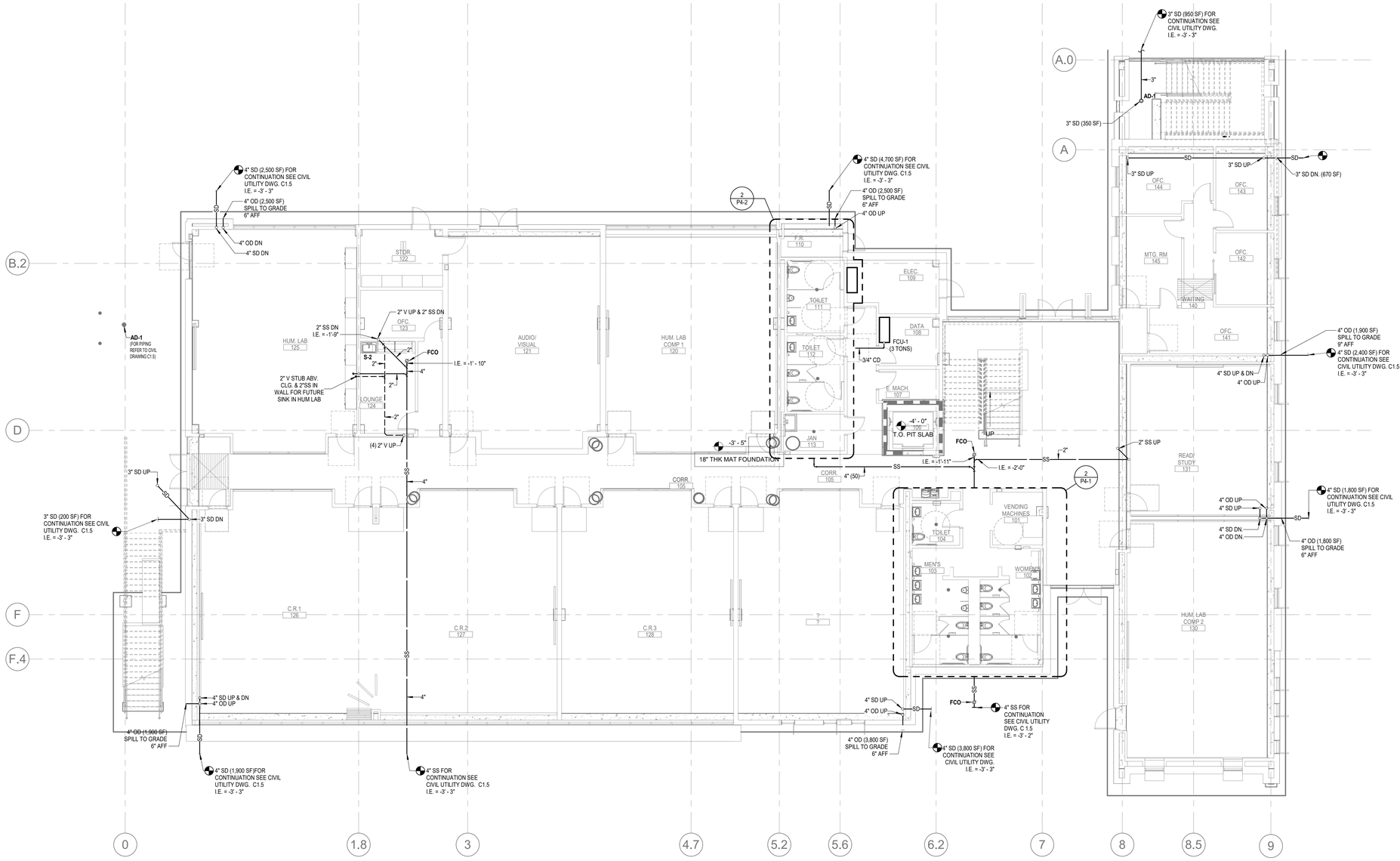

PLUMBING FIRST FLOOR PLAN - GRAVITY 1

SCALE 1/8" = 1'-0"

IDENTIFICATION STAMP
DIV. OF THE STATE ARCHITECT
APP. 03-119458 INC:
REVIEWED FOR
SS ☑ FLS ☑ ACS ☑
DATE:05/23/2019

DIVISION OF THE STATE ARCHITECT
355 South Grand Avenue, Suite 2100
Los Angeles, CA 90012
ph: (213) 897-3995 fx:(213) 897-3159

agency

tBP architecture planning interiors

tBP/Architecture
4611 Teller Avenue
Newport Beach, CA 92660
ph: 949.673.0300 fx: 949.732.3895

architect

CAPITAL ENGINEERING CONSULTANTS, INC.
LONG BEACH, CALIFORNIA
CM - RH/SL/TS 171221.00
PM - DESIGN TEAM PROJECT NO.

REGISTERED PROFESSIONAL ENGINEER
CHRISTOPHER V. MERCURIO
M 34011
EXPIRES 03/30/20
MECHANICAL
STATE OF CALIFORNIA

DATE SIGNED: 04/05/19

consultant

COMPTON COLLEGE
INSTRUCTIONAL BUILDING No.2

COMPTON COMMUNITY COLLEGE DISTRICT
1111 E. ARTESIA BLVD. COMPTON, CA.

owner

tBP project number: 20998.00
file name:
drawn by: checked by:
date: 11 / 20 / 2018

rev:	date:	description:

THIS DRAWING AND THE DESIGNS, DEPICTIONS, IDEAS AND OTHER INFORMATION CONTAINED HEREIN CONSTITUTE UNPUBLISHED WORK OF tBP/ARCHITECTURE AND SHALL REMAIN PROPERTY OF tBP/ARCHITECTURE IN PERPETUITY. NO PART THEREOF SHALL BE REPRODUCED, DISCLOSED, DISTRIBUTED, SOLD, PUBLISHED OR OTHERWISE USED IN ANY WAY WITHOUT THE ADVANCED EXPRESS WRITTEN CONSENT OF tBP/ARCHITECTURE.

drawing title:
PLUMBING FIRST FLOOR PLAN - GRAVITY

drawing no.:
P1-1

drawing of

4/8/2019 6:06:26 PM

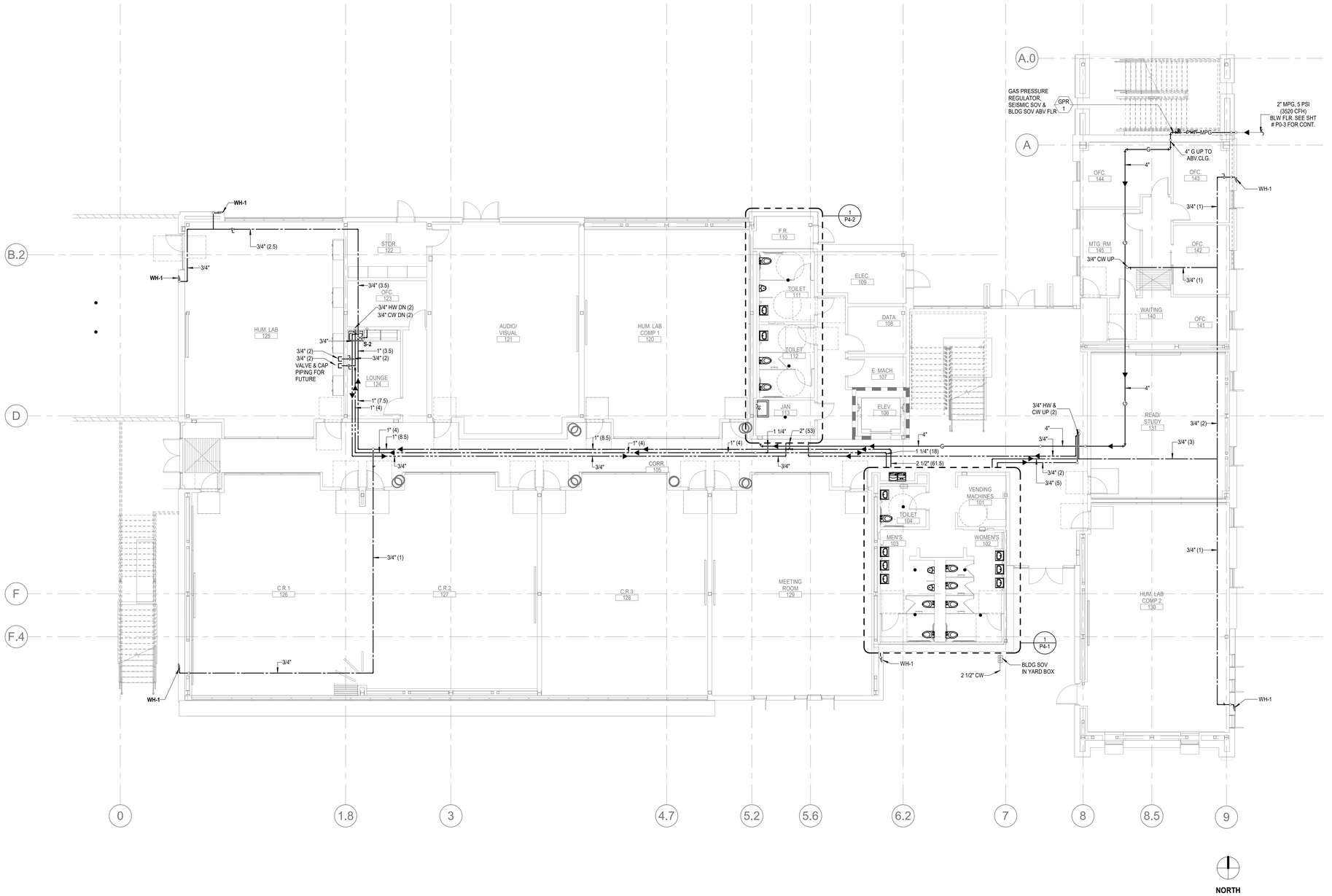

PLUMBING FIRST FLOOR PLAN - PRESSURE 1

SCALE 1/8" = 1'-0"

IDENTIFICATION STAMP
DIV. OF THE STATE ARCHITECT
APP. 03-119458 INC:
REVIEWED FOR
SS ☑ FLS ☑ ACS ☑
DATE:05/23/2019

DIVISION OF THE STATE ARCHITECT
355 South Grand Avenue, Suite 2100
Los Angeles, CA 90012
ph: (213) 897-3995 fx:(213) 897-3159

agency

tBP architecture planning interiors

tBP/Architecture
4611 Teller Avenue
Newport Beach, CA 92660
ph: 949.673.0300 fx: 949.732.3895

architect

CAPITAL ENGINEERING CONSULTANTS, INC.
LONG BEACH, CALIFORNIA
CM - RH/SL/TS 171221.00
PM - DESIGN TEAM PROJECT NO.

REGISTERED PROFESSIONAL ENGINEER CHRISTOPHER V. MERCURIO M 34011 EXPIRES 03/30/20 MECHANICAL STATE OF CALIFORNIA

DATE SIGNED: 04/05/19

consultant

COMPTON COLLEGE
INSTRUCTIONAL BUILDING No.2

COMPTON COMMUNITY COLLEGE DISTRICT
1111 E. ARTESIA BLVD. COMPTON, CA.

owner

tBP project number: 20998.00
file name:
drawn by: checked by:
date: 11 / 20 / 2018

rev:	date:	description:

THIS DRAWING AND THE DESIGNS, DEPICTIONS, IDEAS AND OTHER INFORMATION CONTAINED HEREIN CONSTITUTE UNPUBLISHED WORK OF tBP/ARCHITECTURE AND SHALL REMAIN PROPERTY OF tBP/ARCHITECTURE IN PERPETUITY. NO PART THEREOF SHALL BE REPRODUCED, DISCLOSED, DISTRIBUTED, SOLD, PUBLISHED OR OTHERWISE USED IN ANY WAY WITHOUT THE ADVANCED EXPRESS WRITTEN CONSENT OF tBP/ARCHITECTURE.

drawing title:
PLUMBING FIRST FLOOR PLAN - PRESSURE

drawing no.:
P1-2

drawing of

4/8/2019 6:06:29 PM

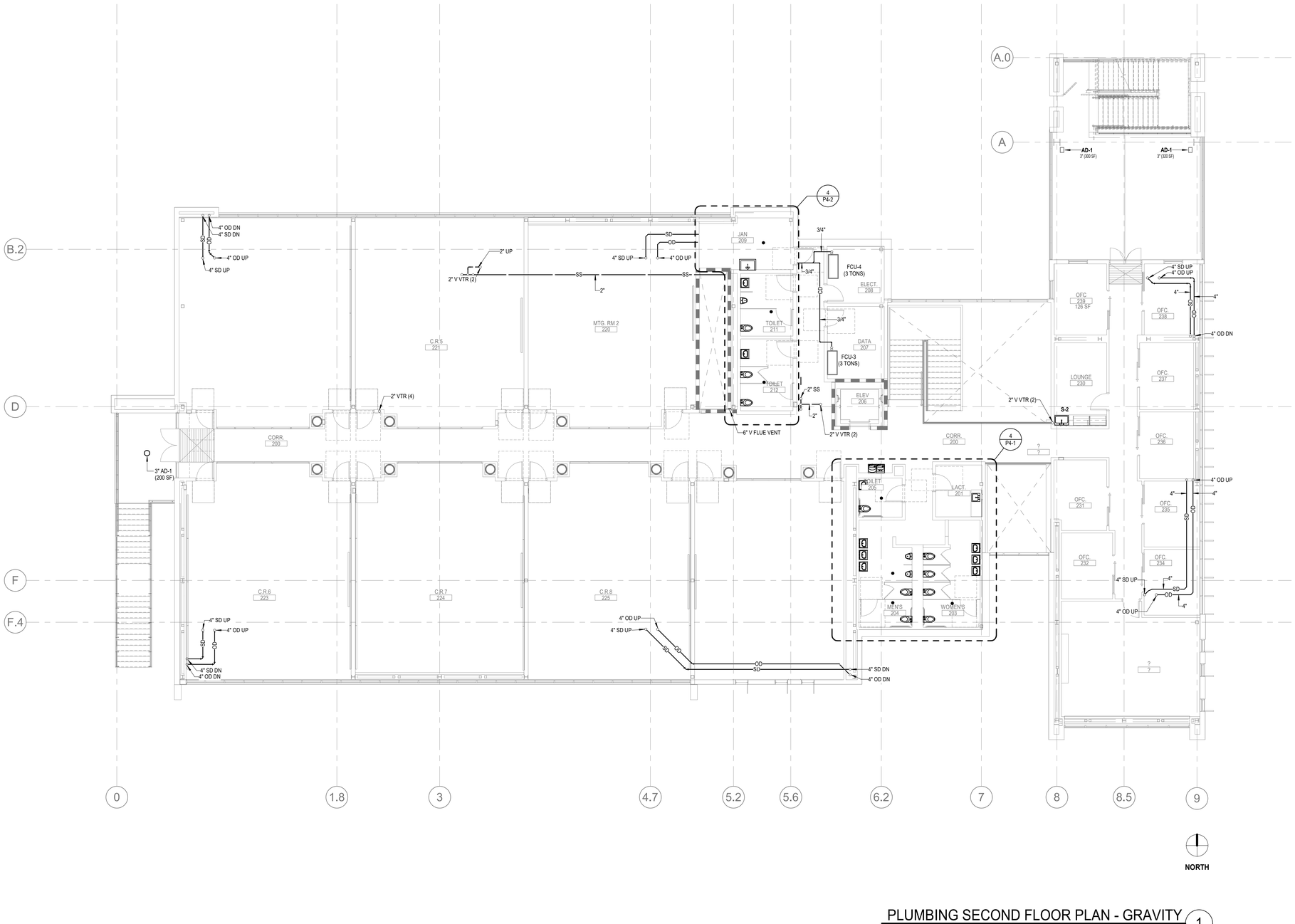

PLUMBING SECOND FLOOR PLAN - GRAVITY 1

SCALE 1/8" = 1'-0"

IDENTIFICATION STAMP
DIV. OF THE STATE ARCHITECT
APP. 03-119458 INC:
REVIEWED FOR
SS ☑ FLS ☑ ACS ☑
DATE:05/23/2019

DIVISION OF THE STATE ARCHITECT
355 South Grand Avenue, Suite 2100
Los Angeles, CA 90012
ph: (213) 897-3995 fx:(213) 897-3159

agency

tBP
architecture
planning
interiors

tBP/Architecture
4611 Teller Avenue
Newport Beach, CA 92660
ph: 949.673.0300 fx: 949.732.3895

architect

CAPITAL
ENGINEERING CONSULTANTS, INC.
LONG BEACH, CALIFORNIA
CM - RH/SL/TS 171221.00
PM - DESIGN TEAM PROJECT NO.

REGISTERED PROFESSIONAL ENGINEER
CHRISTOPHER V. MERCURIO
M 34011
EXPIRES 03/30
MECHANICAL
STATE OF CALIFORNIA

DATE SIGNED: 04/05/19

consultant

COMPTON COLLEGE
INSTRUCTIONAL BUILDING No.2

COMPTON COMMUNITY COLLEGE DISTRICT
1111 E. ARTESIA BLVD. COMPTON, CA.

owner

tBP project number: 20998.00
file name:
drawn by: checked by:
date: 11 / 20 / 2018

rev:	date:	description:

THIS DRAWING AND THE DESIGNS, DEPICTIONS, IDEAS AND OTHER INFORMATION CONTAINED HEREIN CONSTITUTE UNPUBLISHED WORK OF tBP/ARCHITECTURE AND SHALL REMAIN PROPERTY OF tBP/ARCHITECTURE IN PERPETUITY. NO PART THEREOF SHALL BE REPRODUCED, DISCLOSED, DISTRIBUTED, SOLD, PUBLISHED OR OTHERWISE USED IN ANY WAY WITHOUT THE ADVANCED EXPRESS WRITTEN CONSENT OF tBP/ARCHITECTURE.

drawing title:
PLUMBING SECOND FLOOR PLAN - GRAVITY

drawing no.:
P2-1

drawing of

4/8/2019 6:06:32 PM

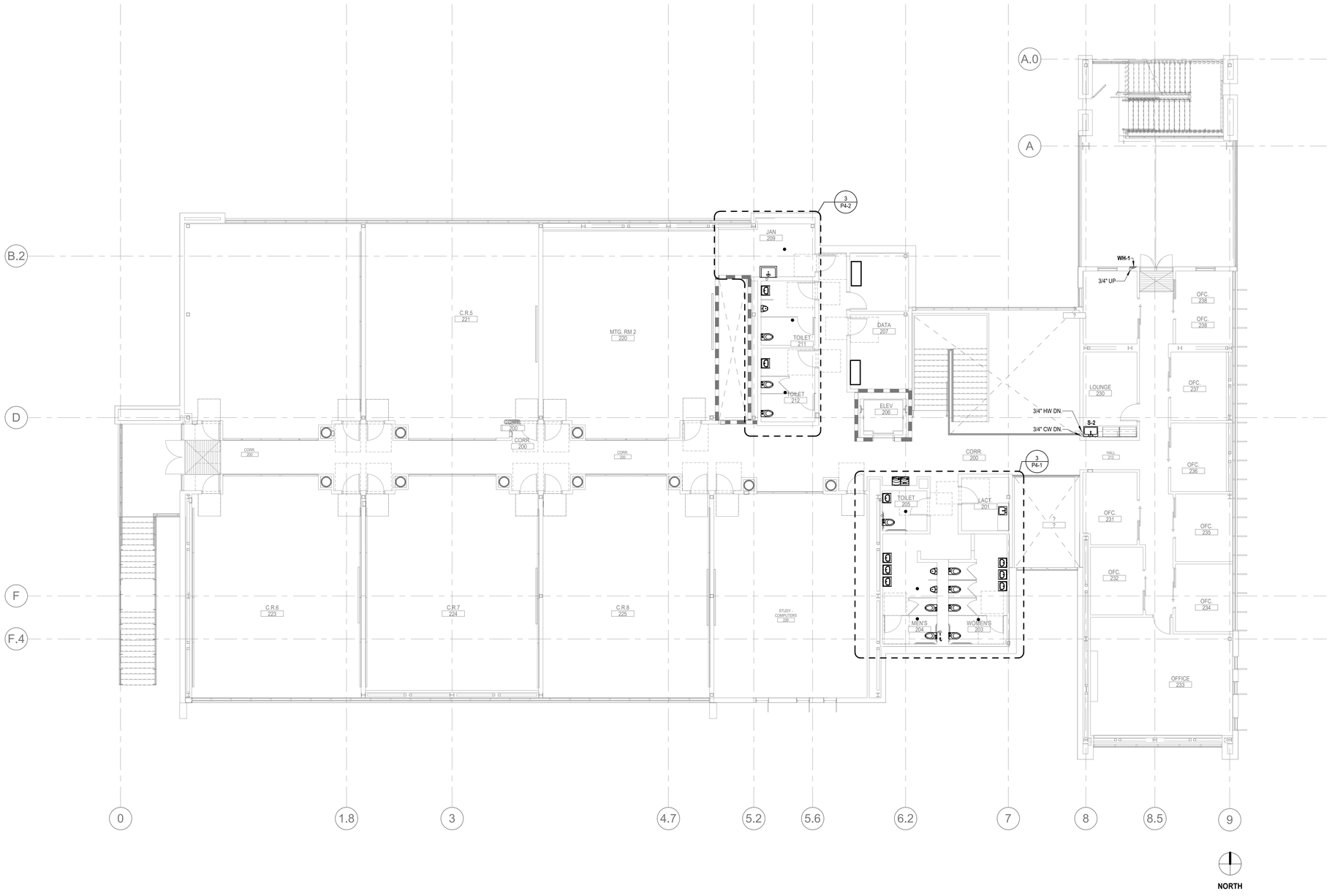

PLUMBING SECOND FLOOR PLAN - PRESSURE 1

SCALE 1/8" = 1'-0"

IDENTIFICATION STAMP
DIV. OF THE STATE ARCHITECT
APP. 03-119458 INC:
REVIEWED FOR
SS ☑ FLS ☑ ACS ☑
DATE:05/23/2019

DIVISION OF THE STATE ARCHITECT
355 South Grand Avenue, Suite 2100
Los Angeles, CA 90012
ph: (213) 897-3995 fx:(213) 897-3159

agency

tBP architecture planning interiors

tBP/Architecture
4611 Teller Avenue
Newport Beach, CA 92660
ph: 949.673.0300 fx: 949.732.3895

architect

CAPITAL ENGINEERING CONSULTANTS, INC.
LONG BEACH, CALIFORNIA
CM - RH/SL/TS 171221.00
PM - DESIGN TEAM PROJECT NO.

REGISTERED PROFESSIONAL ENGINEER
CHRISTOPHER V. MERCURIO
M 34011
EXPIRES 03/30
MECHANICAL
STATE OF CALIFORNIA

DATE SIGNED: 04/05/19

consultant

COMPTON COLLEGE
INSTRUCTIONAL BUILDING No.2

COMPTON COMMUNITY COLLEGE DISTRICT
1111 E. ARTESIA BLVD. COMPTON, CA.

owner

tBP project number: 20998.00
file name:
drawn by: checked by:
date: 11 / 20 / 2018

rev:	date:	description:

THIS DRAWING AND THE DESIGNS, DEPICTIONS, IDEAS AND OTHER INFORMATION CONTAINED HEREIN CONSTITUTE UNPUBLISHED WORK OF tBP/ARCHITECTURE AND SHALL REMAIN PROPERTY OF tBP/ARCHITECTURE IN PERPETUITY. NO PART THEREOF SHALL BE REPRODUCED, DISCLOSED, DISTRIBUTED, SOLD, PUBLISHED OR OTHERWISE USED IN ANY WAY WITHOUT THE ADVANCED EXPRESS WRITTEN CONSENT OF tBP/ARCHITECTURE.

drawing title:
PLUMBING SECOND FLOOR PLAN - PRESSURE

drawing no.:
P2-2

drawing of

4/8/2019 6:06:35 PM

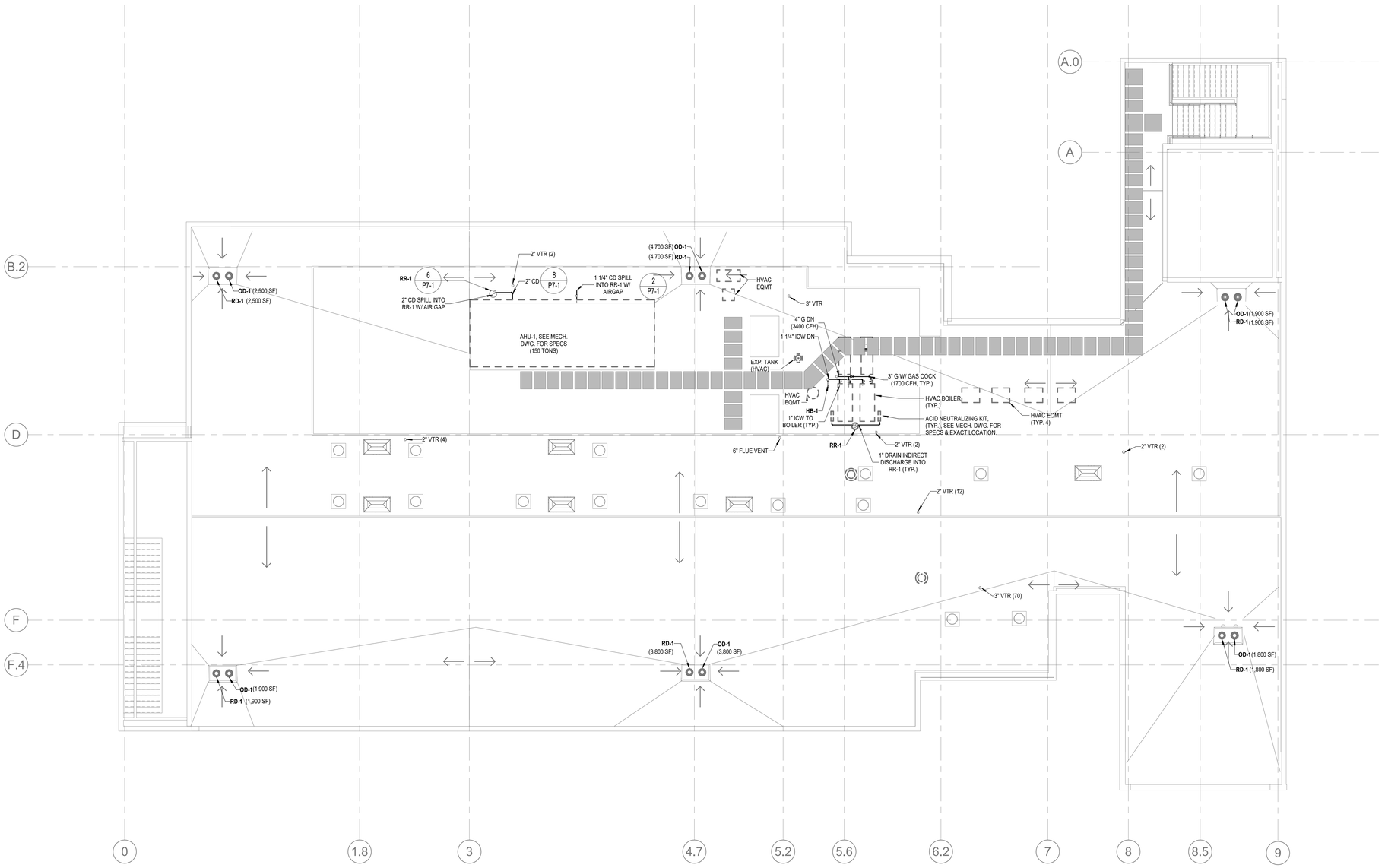

PLUMBING ROOF PLAN 1
SCALE 1/8" = 1'-0"

IDENTIFICATION STAMP
DIV. OF THE STATE ARCHITECT
APP. 03-119458 INC:
REVIEWED FOR
SS ☑ FLS ☑ ACS ☑
DATE: 05/23/2019

DIVISION OF THE STATE ARCHITECT
355 South Grand Avenue, Suite 2100
Los Angeles, CA 90012
ph: (213) 897-3995 fx:(213) 897-3159
agency

tBP
architecture
planning
interiors

tBP/Architecture
4611 Teller Avenue
Newport Beach, CA 92660
ph: 949.673.0300 fx: 949.732.3895
architect

CAPITAL
ENGINEERING CONSULTANTS, INC.
LONG BEACH, CALIFORNIA
CM - RH/SL/TS 171221.00
PM - DESIGN TEAM PROJECT NO.

REGISTERED PROFESSIONAL ENGINEER
CHRISTOPHER V. MERCURIO
M 34011
EXPIRES 9/30/20
MECHANICAL
STATE OF CALIFORNIA

DATE SIGNED: 04/05/19
consultant

COMPTON COLLEGE
INSTRUCTIONAL BUILDING No.2
COMPTON COMMUNITY COLLEGE DISTRICT
1111 E. ARTESIA BLVD. COMPTON, CA.
owner

tBP project number: 20998.00
file name:
drawn by: checked by:
date: 11 / 20 / 2018

rev:	date:	description:

THIS DRAWING AND THE DESIGNS, DEPICTIONS, IDEAS AND OTHER INFORMATION CONTAINED HEREIN CONSTITUTE UNPUBLISHED WORK OF tBP/ARCHITECTURE AND SHALL REMAIN PROPERTY OF tBP/ARCHITECTURE IN PERPETUITY. NO PART THEREOF SHALL BE REPRODUCED, DISCLOSED, DISTRIBUTED, SOLD, PUBLISHED OR OTHERWISE USED IN ANY WAY WITHOUT THE ADVANCED EXPRESS WRITTEN CONSENT OF tBP/ARCHITECTURE.

drawing title:
PLUMBING ROOF PLAN

drawing no.:
P3-1
drawing of

4/8/2019 6:06:36 PM

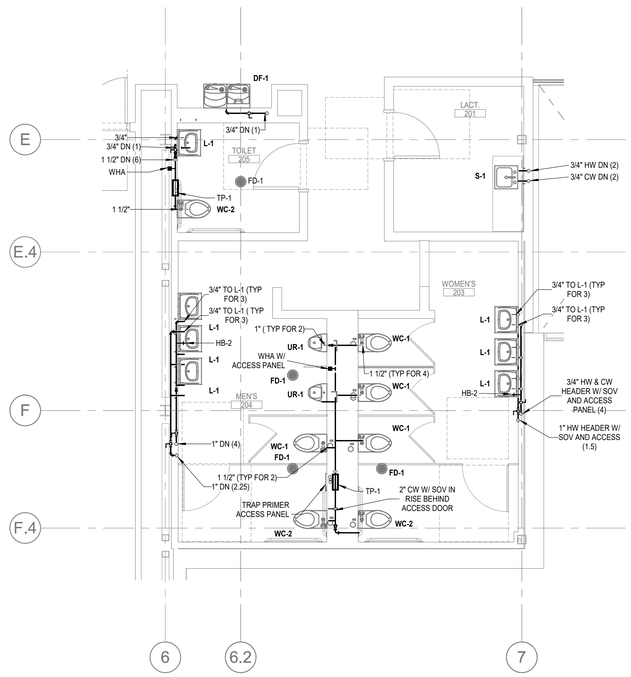

ENLARGED SECOND FLOOR PLAN - RM 201, 203, 204 & 205 - PRESSURE 3

SCALE 1/4" = 1'-0"

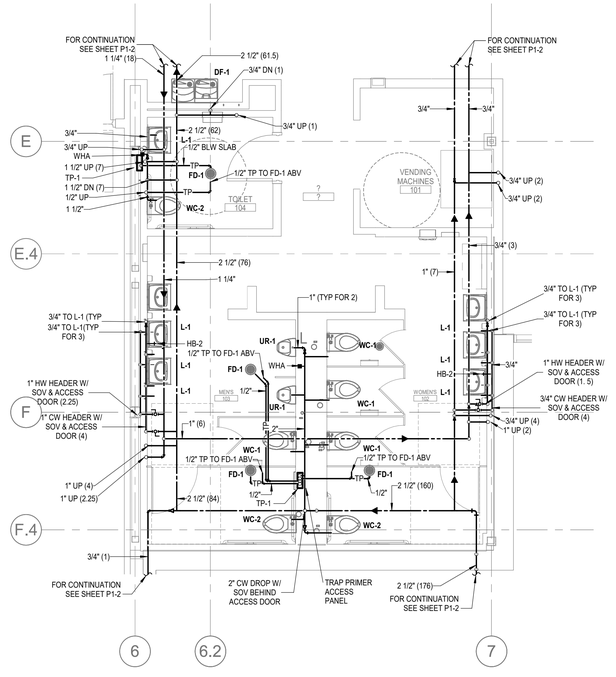

ENLARGED FIRST FLOOR PLAN - RM 101, 102, 103 & 104 - PRESSURE 1

SCALE 1/4" = 1'-0"

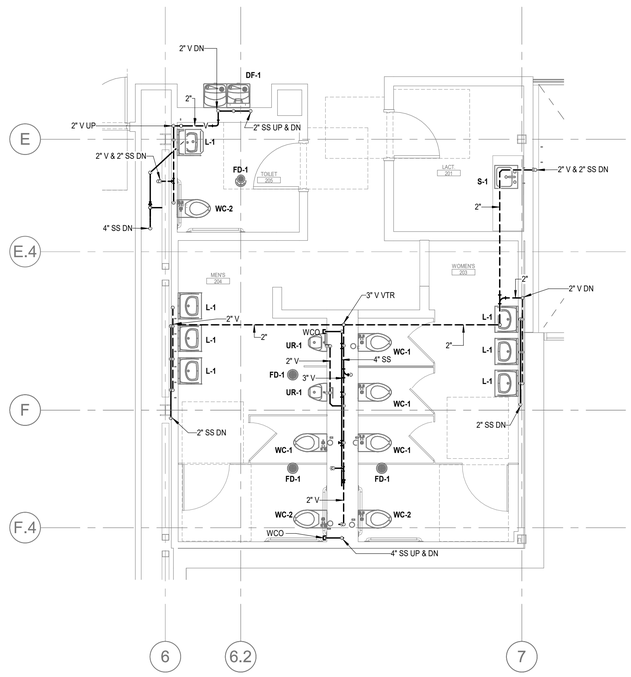

ENLARGED SECOND FLOOR PLAN - RM 201, 203, 204 & 205 - GRAVITY 4

SCALE 1/4" = 1'-0"

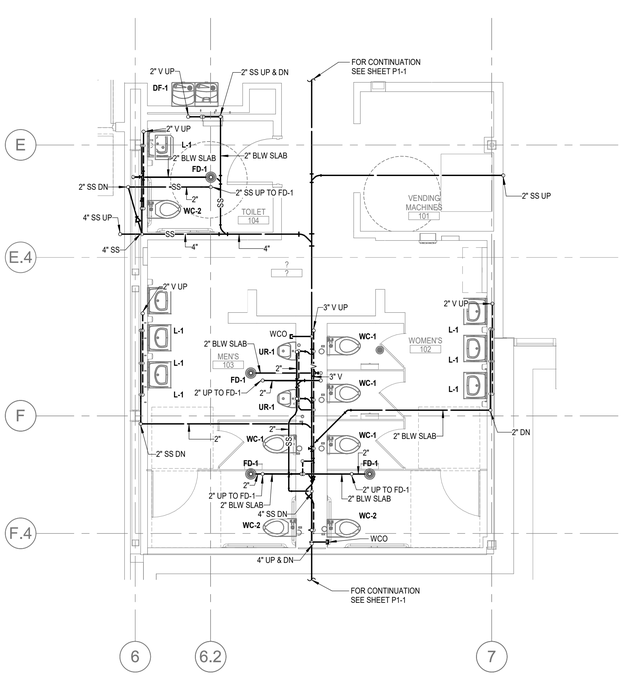

ENLARGED FIRST FLOOR PLAN - RM 101, 102, 103 & 104 - GRAVITY 2

SCALE 1/4" = 1'-0"

4/8/2019 6:06:41 PM

IDENTIFICATION STAMP
DIV. OF THE STATE ARCHITECT
APP. 03-119458 INC:
REVIEWED FOR
SS ☑ FLS ☑ ACS ☑
DATE:05/23/2019

DIVISION OF THE STATE ARCHITECT
355 South Grand Avenue, Suite 2100
Los Angeles, CA 90012
ph: (213) 897-3995 fx:(213) 897-3159

agency

tBP architecture planning interiors

tBP/Architecture
4611 Teller Avenue
Newport Beach, CA 92660
ph: 949.673.0300 fx: 949.732.3895

architect

CAPITAL ENGINEERING CONSULTANTS, INC.
LONG BEACH, CALIFORNIA
CM - RH/SL/TS PM - DESIGN TEAM
171221.00 PROJECT NO.

REGISTERED PROFESSIONAL ENGINEER ROBERT V. MCCORMICK M 34011 EXPIRES 9/30/19 MECHANICAL STATE OF CALIFORNIA

DATE SIGNED: 04/05/19

consultant

COMPTON COLLEGE
INSTRUCTIONAL BUILDING No.2

COMPTON COMMUNITY COLLEGE DISTRICT
1111 E. ARTESIA BLVD. COMPTON, CA.

owner

tBP project number: 20998.00
file name:
drawn by: checked by:
date: 11 / 20 / 2018

rev:	date:	description:

THIS DRAWING AND THE DESIGNS, DEPICTIONS, IDEAS AND OTHER INFORMATION CONTAINED HEREIN CONSTITUTE UNPUBLISHED WORK OF tBP/ARCHITECTURE AND SHALL REMAIN PROPERTY OF tBP/ARCHITECTURE IN PERPETUITY. NO PART THEREOF SHALL BE REPRODUCED, DISCLOSED, DISTRIBUTED, SOLD, PUBLISHED OR OTHERWISE USED IN ANY WAY WITHOUT THE ADVANCED EXPRESS WRITTEN CONSENT OF tBP/ARCHITECTURE.

drawing title:
PLUMBING ENLARGED PLANS

drawing no.:
P4-1
drawing of

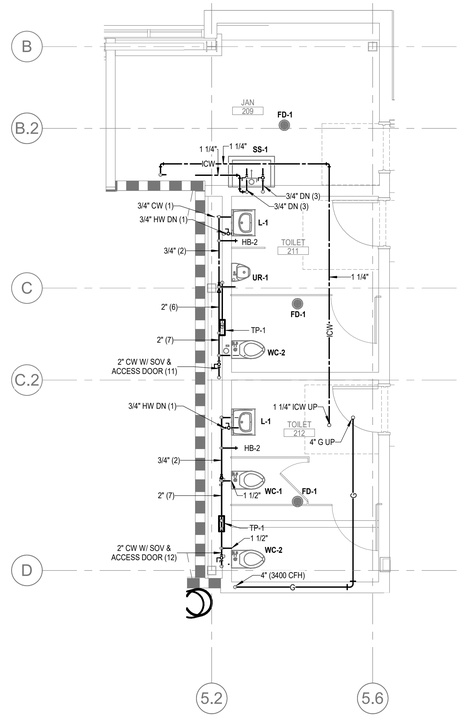

NORTH

ENLARGED SECOND FLOOR PLAN - RM 209, 211 & 212 - PRESSURE 3

SCALE 1/4" = 1'-0"

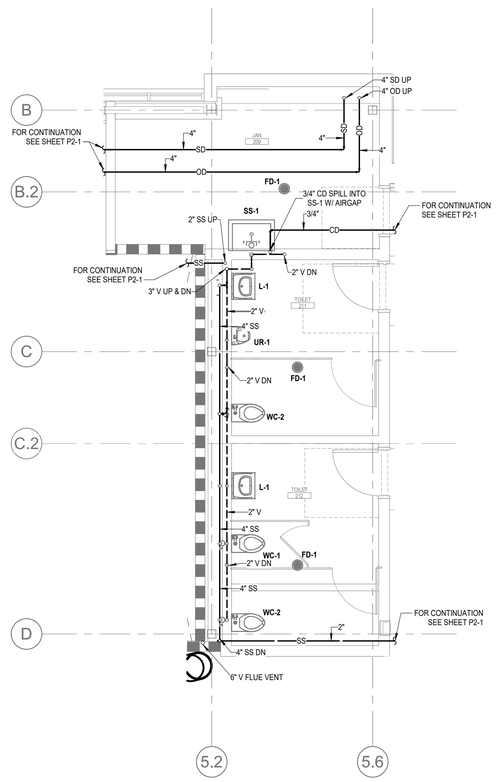

NORTH

ENLARGED SECOND FLOOR PLAN - RM 209, 211 & 212 - GRAVITY 4

SCALE 1/4" = 1'-0"

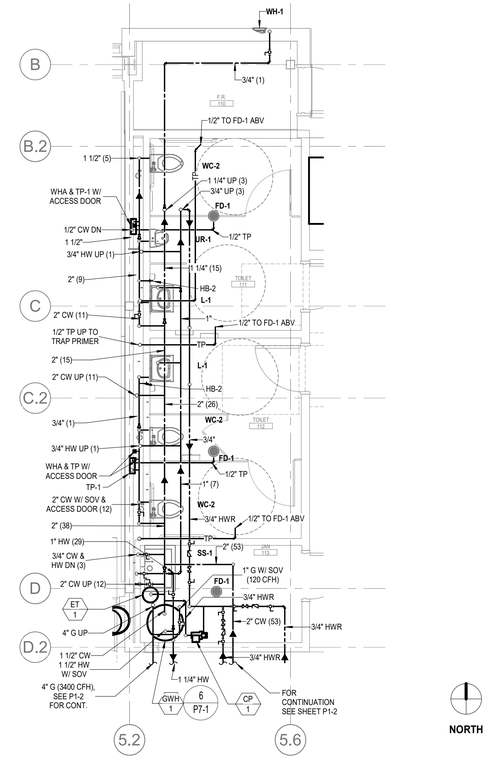

NORTH

ENLARGED FIRST FLOOR PLAN - RM 111 & 112 - PRESSURE 1

SCALE 1/4" = 1'-0"

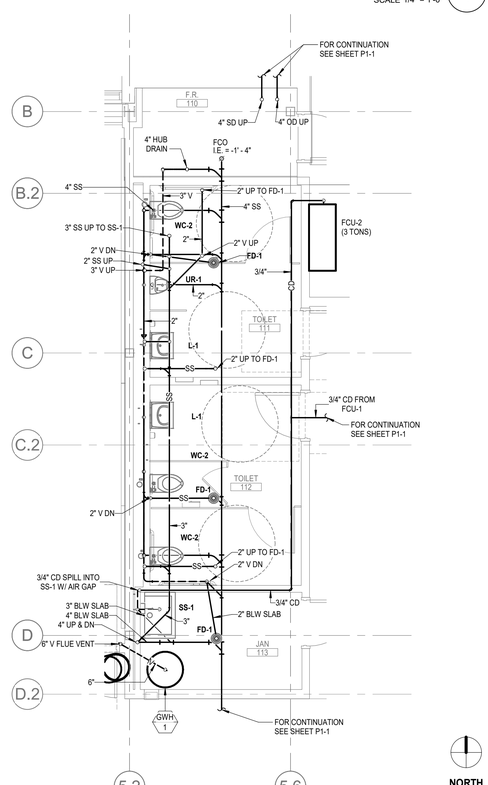

NORTH

ENLARGED FIRST FLOOR PLAN - ROOM 111 & 112 GRAVITY 2

SCALE 1/4" = 1'-0"

4/8/2019 6:06:45 PM

IDENTIFICATION STAMP
DIV. OF THE STATE ARCHITECT
APP. 03-119458 INC:
REVIEWED FOR
SS ☑ FLS ☑ ACS ☑
DATE:05/23/2019

DIVISION OF THE STATE ARCHITECT
355 South Grand Avenue, Suite 2100
Los Angeles, CA 90012
ph: (213) 897-3995 fx:(213) 897-3159
agency

tBP architecture planning interiors

tBP/Architecture
4611 Teller Avenue
Newport Beach, CA 92660
ph: 949.673.0300 fx. 949.732.3895
architect

CAPITAL ENGINEERING CONSULTANTS, INC.
LONG BEACH, CALIFORNIA
CM - RH/SL/TS PM. - DESIGN TEAM
171221.00 PROJECT NO.

REGISTERED PROFESSIONAL ENGINEER
ROBERT V. MEYERS
M 34011
EXPIRES 6/30/20
MECHANICAL
STATE OF CALIFORNIA

DATE SIGNED: 04/05/19
consultant

COMPTON COLLEGE
INSTRUCTIONAL BUILDING No.2
COMPTON COMMUNITY COLLEGE DISTRICT
1111 E. ARTESIA BLVD. COMPTON, CA.
owner

tBP project number: 20998.00
file name:
drawn by: checked by:
date: 11 / 20 / 2018

rev:	date:	description:

THIS DRAWING AND THE DESIGNS, DEPICTIONS, IDEAS AND OTHER INFORMATION CONTAINED HEREIN CONSTITUTE UNPUBLISHED WORK OF tBP/ARCHITECTURE AND SHALL REMAIN PROPERTY OF tBP/ARCHITECTURE IN PERPETUITY. NO PART THEREOF SHALL BE REPRODUCED, DISCLOSED, DISTRIBUTED, SOLD, PUBLISHED OR OTHERWISE USED IN ANY WAY WITHOUT THE APPROVED EXPRESS WRITTEN CONSENT OF tBP/ARCHITECTURE.

drawing title:
PLUMBING ENLARGED PLANS

drawing no.:
P4-2
drawing of

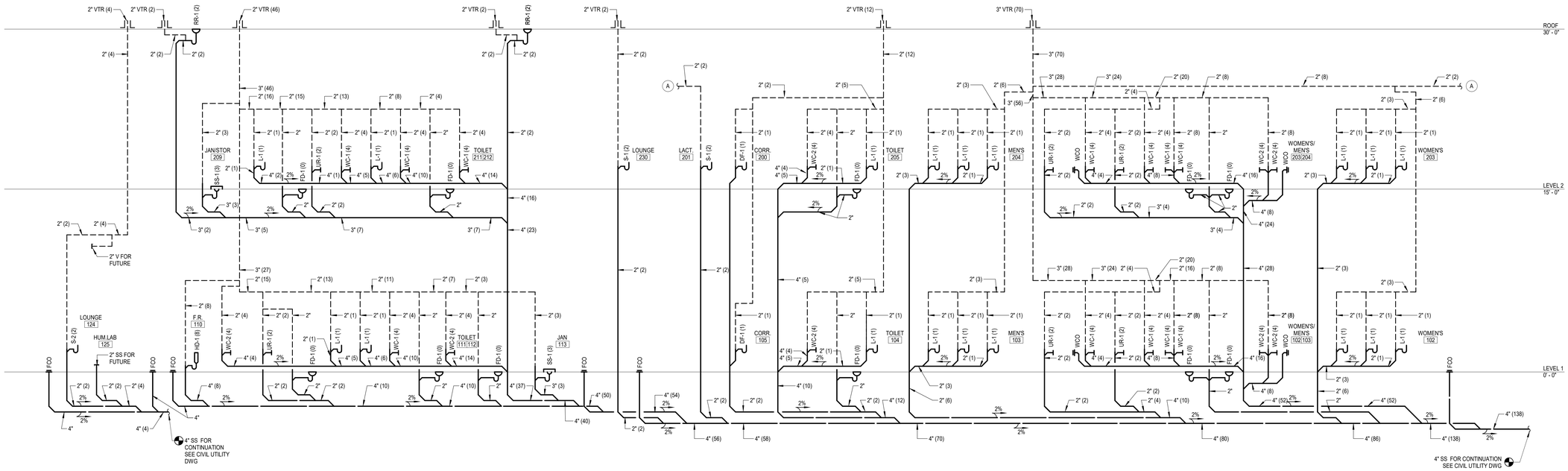

PLUMBING WASTE & VENT RISER DIAGRAM

SCALE NONE 1

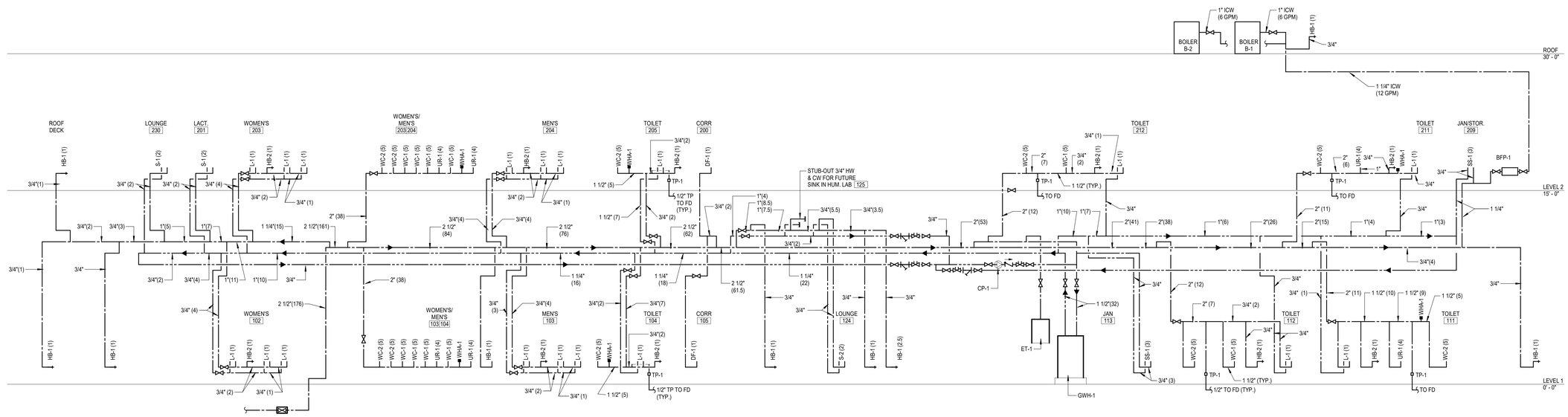

PLUMBING HOT & COLD WATER RISER DIAGRAM

SCALE 1/8" = 1'-0" 2

4/8/2019 6:06:48 PM

IDENTIFICATION STAMP
DIV. OF THE STATE ARCHITECT
APP. 03-119458 INC:
REVIEWED FOR
SS ☑ FLS ☑ ACS ☑
DATE:05/23/2019

DIVISION OF THE STATE ARCHITECT
355 South Grand Avenue, Suite 2100
Los Angeles, CA 90012
ph: (213) 897-3995 fx:(213) 897-3159
agency

tBP
architecture
planning
interiors

tBP/Architecture
4611 Teller Avenue
Newport Beach, CA 92660
ph: 949.673.0300 fx: 949.732.3895
architect

CAPITAL
ENGINEERING CONSULTANTS, INC.
LONG BEACH, CALIFORNIA
CM - RH/SL/TS PM - DESIGN TEAM
171221.00 PROJECT NO.
REGISTERED PROFESSIONAL ENGINEER
RICHARD H. TORNEY V. M. E. 34011
EXPIRES 9/30/19
MECHANICAL
STATE OF CALIFORNIA
DATE SIGNED: 04/05/19
consultant

COMPTON COLLEGE
INSTRUCTIONAL BUILDING No.2
COMPTON COMMUNITY COLLEGE DISTRICT
1111 E. ARTESIA BLVD. COMPTON, CA.
owner

tBP project number: 20998.00
file name:
drawn by: checked by:
date: 11 / 20 / 2018

rev:	date:	description:

THIS DRAWING AND THE DESIGNS, DEPICTIONS, IDEAS AND OTHER INFORMATION CONTAINED HEREIN CONSTITUTE UNPUBLISHED WORK OF tBP/ARCHITECTURE AND SHALL REMAIN PROPERTY OF tBP/ARCHITECTURE IN PERPETUITY. NO PART THEREOF SHALL BE REPRODUCED, DISCLOSED, DISTRIBUTED, SOLD, PUBLISHED OR OTHERWISE USED IN ANY WAY WITHOUT THE ADVANCED EXPRESS WRITTEN CONSENT OF tBP/ARCHITECTURE.

drawing title:
PLUMBING HOT & COLD WATER AND WASTE & VENT RISER DIAGRAMS

drawing no.:
P5-1
drawing of

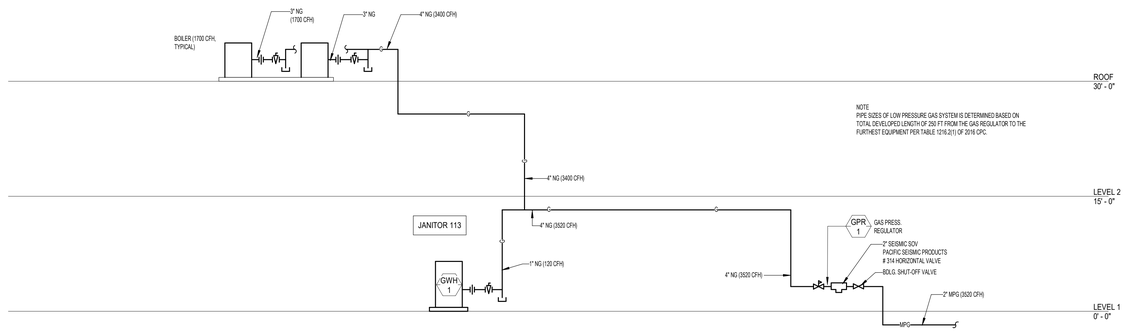

PLUMBING NATURAL GAS RISER DIAGRAM 1

SCALE 1/8" = 1'-0"

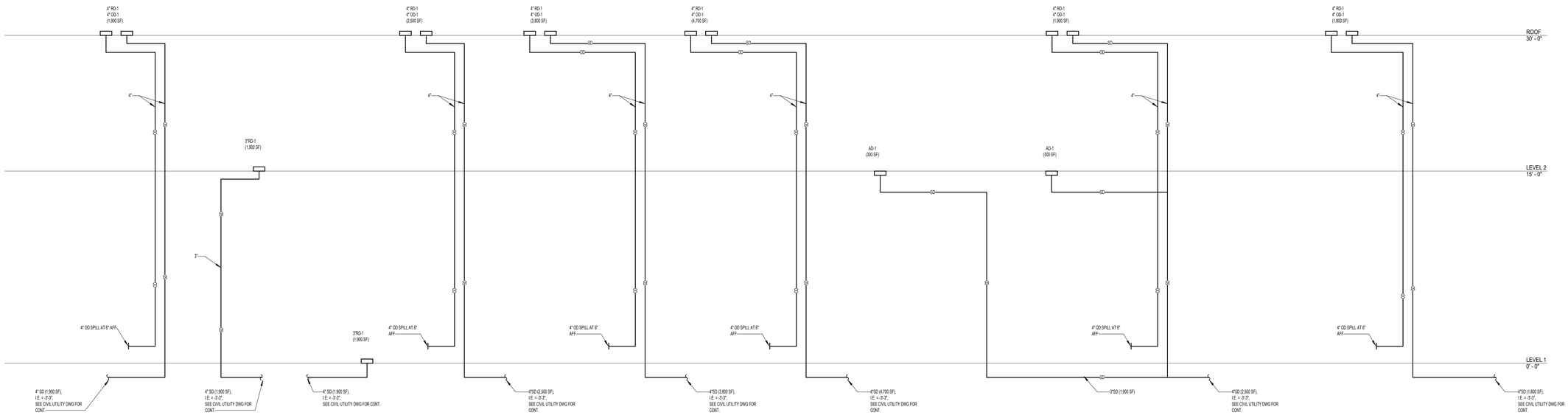

PLUMBING STORM DRAIN RISER DIAGRAM 2

SCALE 1/8" = 1'-0"

4/8/2019 6:06:48 PM

IDENTIFICATION STAMP
DIV. OF THE STATE ARCHITECT
APP. 03-119458 INC:
REVIEWED FOR
SS ☑ FLS ☑ ACS ☑
DATE:05/23/2019

DIVISION OF THE STATE ARCHITECT
355 South Grand Avenue, Suite 2100
Los Angeles, CA 90012
ph: (213) 897-3995 fx:(213) 897-3159
agency

tBP
architecture
planning
interiors

tBP/Architecture
4611 Teller Avenue
Newport Beach, CA 92660
ph: 949.673.0300 fx: 949.732.3895
architect

CAPITAL
ENGINEERING CONSULTANTS, INC.
LONG BEACH, CALIFORNIA
CM - RH/SL/TS 171221.00
PM - DESIGN TEAM PROJECT NO.

REGISTERED PROFESSIONAL ENGINEER
CHRISTOPHER V. MERCURY
M 34011
EXPIRES 9/30/20
MECHANICAL
STATE OF CALIFORNIA

DATE SIGNED: 04/05/19
consultant

COMPTON COLLEGE
INSTRUCTIONAL BUILDING No.2
COMPTON COMMUNITY COLLEGE DISTRICT
1111 E. ARTESIA BLVD. COMPTON, CA.
owner

tBP project number: 20998.00
file name:
drawn by: checked by:
date: 11 / 20 / 2018

rev:	date:	description:

THIS DRAWING AND THE DESIGNS, DEPICTIONS, IDEAS AND OTHER INFORMATION CONTAINED HEREIN CONSTITUTE UNPUBLISHED WORK OF tBP/ARCHITECTURE AND SHALL REMAIN PROPERTY OF tBP/ARCHITECTURE IN PERPETUITY. NO PART THEREOF SHALL BE REPRODUCED, DISCLOSED, DISTRIBUTED, SOLD, PUBLISHED OR OTHERWISE USED IN ANY WAY WITHOUT THE ADVANCED EXPRESS WRITTEN CONSENT OF tBP/ARCHITECTURE.

drawing title:
PLUMBING NATURAL GAS & STORM DRAIN RISER DIAGRAMS

drawing no.:
P5-2
drawing of

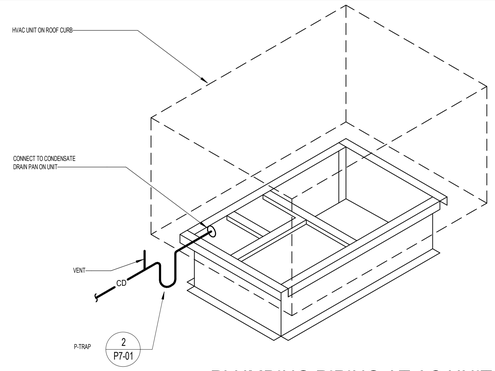

PLUMBING PIPING AT AC UNIT 8

SCALE NONE

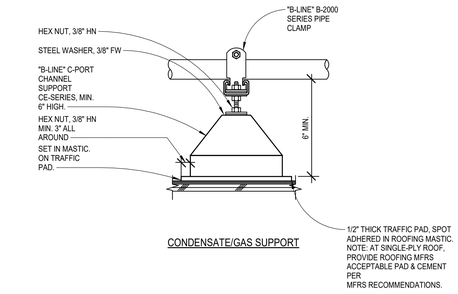

CONDENSATE/GAS SUPPORT

PIPE ON ROOF MOUNTING DETAIL 4

SCALE 1" = 1'-0"

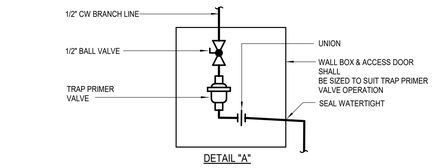

DETAIL "A"

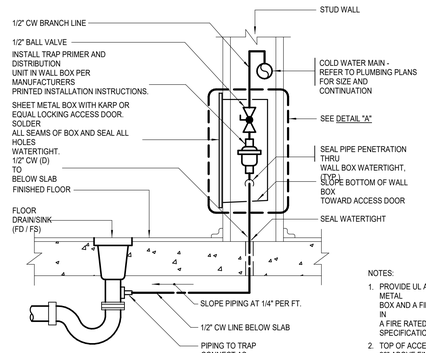

NOTES:

1. PROVIDE UL APPROVED FIRE WRAP AROUND SHEET METAL BOX AND A FIRE RATED ACCESS DOOR WHEN INSTALLED IN A FIRE RATED ASSEMBLY. FOR CONTINUATION REFER TO SPECIFICATIONS SECTION 22 00 50.
2. TOP OF ACCESS DOOR SHALL BE A MAXIMUM OF 28" ABOVE FINISHED FLOOR.
3. CONTRACTOR SHALL CONFIRM FINAL LOCATION OF TRAP PRIMER/ACCESS DOOR WITH THE PROJECT ARCHITECT AND PROVIDE ELEVATION PLANS INDICATING ACCESS DOOR LOCATIONS WITH THEIR FINAL AS-BUILT/SHOP DRAWING SUBMITTAL.

TRAP PRIMER TO FLOOR DRAIN 1

SCALE 1" = 1'-0"

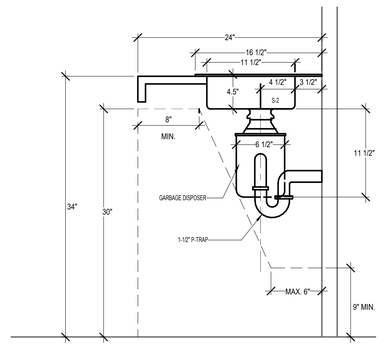

SINK - ADA CLEARANCE 9

SCALE NONE

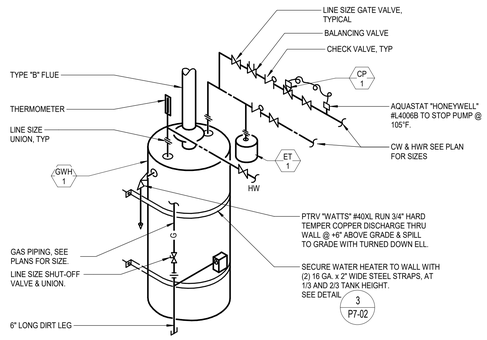

GAS WATER HEATER 5

SCALE 1" = 1'-0"

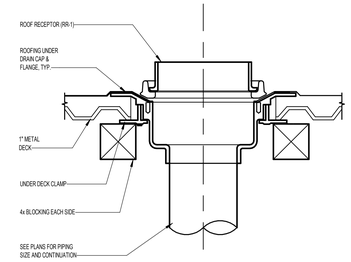

ROOF RECEPTOR 6

SCALE 1" = 1'-0"

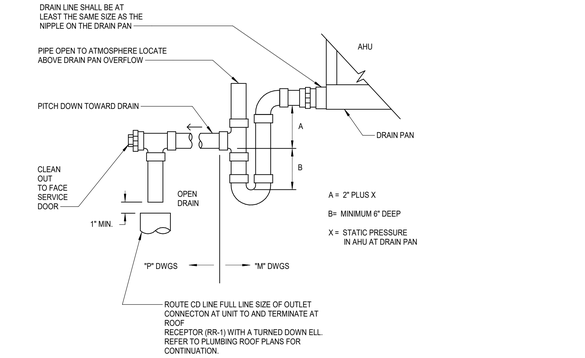

CONDENSATE DRAIN TRAP AT HVAC EQUIPMENT 2

SCALE 1" = 1'-0"

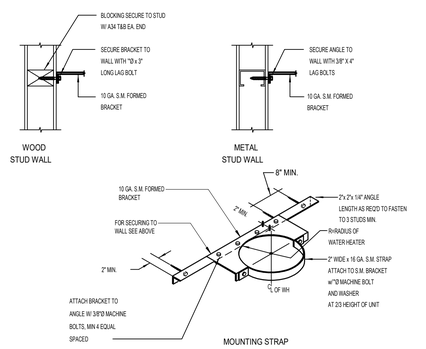

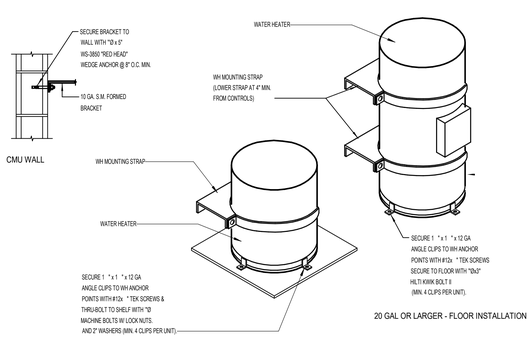

WATER HEATER SUPPORT 7

SCALE NTS

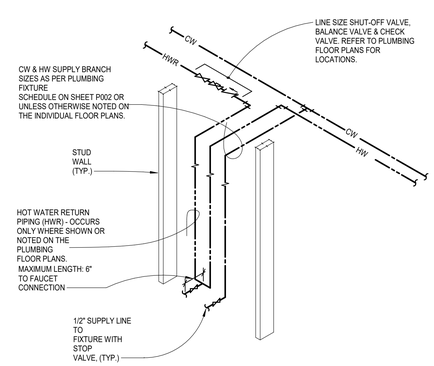

HOT WATER RETURN PIPE DETAIL 3

SCALE 1" = 1'-0"

IDENTIFICATION STAMP
DIV. OF THE STATE ARCHITECT
APP. 03-119458 INC:
REVIEWED FOR
SS ☑ FLS ☑ ACS ☑
DATE:05/23/2019

DIVISION OF THE STATE ARCHITECT
355 South Grand Avenue, Suite 2100
Los Angeles, CA 90012
ph: (213) 897-3995 fx:(213) 897-3159

agency

tBP architecture planning interiors

tBP/Architecture
4611 Teller Avenue
Newport Beach, CA 92660
ph: 949.673.0300 fx: 949.732.3895

architect

CAPITAL ENGINEERING CONSULTANTS, INC.
LONG BEACH, CALIFORNIA
CM - RH/SL/TS 171221.00
PM - DESIGN TEAM PROJECT NO.

REGISTERED PROFESSIONAL ENGINEER
TIMOTHY V. TIETJEN
M 34011
EXPIRES 9/30/20
MECHANICAL
STATE OF CALIFORNIA

DATE SIGNED: 04/05/19

consultant

COMPTON COLLEGE
INSTRUCTIONAL BUILDING No.2
COMPTON COMMUNITY COLLEGE DISTRICT
1111 E. ARTESIA BLVD. COMPTON, CA.

owner

tBP project number: 20998.00

file name:

drawn by: checked by:

date: 11 / 20 / 2018

rev:	date:	description:

THESE DRAWINGS AND THE DESIGNS, DEPICTIONS, IDEAS, AND OTHER INFORMATION CONTAINED HEREIN CONSTITUTE UNPUBLISHED WORK OF tBP/ARCHITECTURE AND SHALL REMAIN PROPERTY OF tBP/ARCHITECTURE IN PERPETUITY. NO PART THEREOF SHALL BE REPRODUCED, DISCLOSED, DISTRIBUTED, SOLD, PUBLISHED OR OTHERWISE USED IN ANY WAY WITHOUT THE ADVANCED EXPRESS WRITTEN CONSENT OF tBP/ARCHITECTURE.

drawing title:
PLUMBING DETAILS

drawing no.:
P7-1
drawing of

4/8/2019 6:06:49 PM

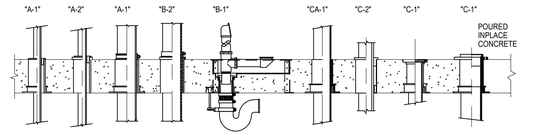

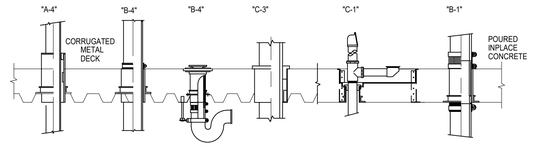

SLEEVES AND FIRESTOPPING

USE PROSET "FIRESTOP PENETRATORS", U.L. OR WARNOCK HERSEY CLASSIFIED AND LISTED IN THE BUILDING MATERIALS DIRECTORY. TESTED IN ACCORDANCE WITH THE ASTM E-814, U.L. 1479 AND CSA/ULC CAN S-115 TES STANDARDS. USE FOR ALL APPLICABLE PIPE PENETRATIONS AND PLUMBING FIXTURE FLOOR OPENINGS THROUGH FIRE RATED FLOORS, WALLS OR FLOOR/CEILING ASSEMBLIES IN ACCORDANCE WITH THE MANUFACTURERS INSTRUCTIONS.

A. USE SYSTEM "A" PENETRATORS FOR WATER LINES, HEATING AND COOLING LINES, FIRE STANDPIPE AND SPRINKLER LINES, TEMPERATURE CONTROL, ACID WASTE GLASS OR DURION PIPE AND ELECTRIC AND COMMUNICATION CONDUIT PENETRATING FLOORS OR WALLS.

B. USE SYSTEM "B" PENETRATORS FOR CAST IRON OR COPPER DWV PIPES FOR STACKS AND DRAINS PENETRATING FLOORS OR WALLS.

C. USE SYSTEM "C" PENETRATORS FOR PLASTIC DWV PIPES FOR STACKS AND DRAINS PENETRATING FLOORS OR WALLS.

CA. USE SYSTEM "CA" PENETRATORS FOR POLYPROPYLENE ACID WASTE PIPE PENETRATING FLOORS OR WALLS.

1. USE CAST-IN-COUPLING PENETRATORS FOR POURED-IN-PLACE CONCRETE ON STEEL OR WOOD FORMS IN FLOORS OR WALLS.

2. USE C.H. PVC OR METAL COUPLING PENETRATORS FOR CORED HOLES THROUGH PRECAST OR EXISTING CONCRETE IN FLOORS OR WALLS.

3. USE P-90 WALL SLEEVE PENETRAORS FOR PIPES PASSING THROUGH GYPSUM WALLS OR FLOOR/CEILING ASSEMBLIES.

4. USE CM METAL OR PVC SLIP FLANGE CM COUPLING FOR POURED-IN-PLACE CONCRETE ON CORRUGATED METAL DECK.

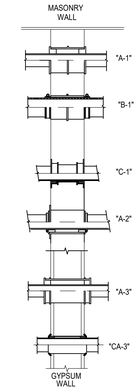

NOTE:
PENETRATIONS IN WALLS, FLOORS OR CEILINGS REQUIRING PROTECTED OPENINGS SHALL BE FIRE-STOPPED. FIRE STOPPING SHALL BE OF AN APPROVED MATERIAL; SECURELY INSTALLED AND CAPABLE OF MAINTAINING ITS INTEGRITY WHEN SUBJECTED TO THE TIME TEMPERATURE CURVE OF SFM STANDARD 12-43-3 AND 12-43-1. MANUFACTURER'S INSTALLATION INSTRUCTIONS SHALL BE MADE AVAILABLE TO THE INSPECTION AUTHORITY AND KEPT AT THE JOB SITE.

FIRESTOP PENETRATIONS

SCALE 1" = 1'-0" (1)

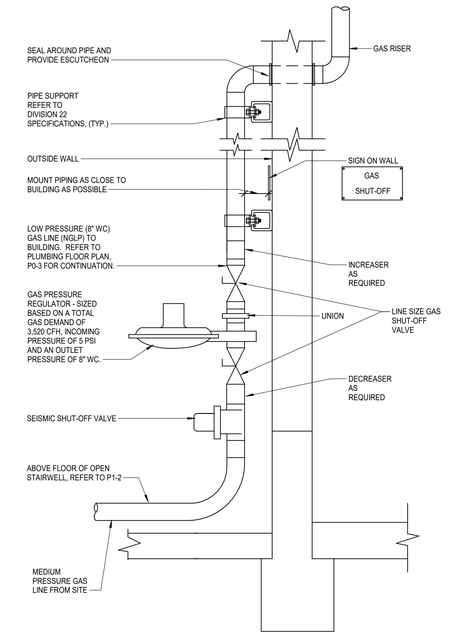

GAS PRESSURE REGULATOR

SCALE NTS (2)

4/8/2019 6:05:50 PM

IDENTIFICATION STAMP
DIV. OF THE STATE ARCHITECT
APP. 03-119458 INC:
REVIEWED FOR
SS ☑ FLS ☑ ACS ☑
DATE:05/23/2019

DIVISION OF THE STATE ARCHITECT
355 South Grand Avenue, Suite 2100
Los Angeles, CA 90012
ph: (213) 897-3995 fx:(213) 897-3159

agency

tBP architecture planning interiors

tBP/Architecture
4611 Teller Avenue
Newport Beach, CA 92660
ph: 949.673.0300 fx: 949.732.3895

architect

CAPITAL ENGINEERING CONSULTANTS, INC.
LONG BEACH, CALIFORNIA

CM - RH/SL/TS	171221.00
PM - DESIGN TEAM	PROJECT NO.

REGISTERED PROFESSIONAL ENGINEER — CHRISTOPHER V. REYES — M 34011 — EXPIRES 3/31/20 — MECHANICAL — STATE OF CALIFORNIA

DATE SIGNED: 04/05/19

consultant

COMPTON COLLEGE
INSTRUCTIONAL BUILDING No.2
COMPTON COMMUNITY COLLEGE DISTRICT
1111 E. ARTESIA BLVD. COMPTON, CA.

owner

tBP project number:	20998.00
file name:	
drawn by:	checked by:
date:	11 / 20 / 2018

rev:	date:	description:

THIS DRAWING AND THE DESIGNS, DEPICTIONS, IDEAS AND OTHER INFORMATION CONTAINED HEREIN CONSTITUTE UNPUBLISHED WORK OF tBP/ARCHITECTURE AND SHALL REMAIN PROPERTY OF tBP/ARCHITECTURE IN PERPETUITY. NO PART THEREOF SHALL BE REPRODUCED, DISCLOSED, DISTRIBUTED, SOLD, PUBLISHED OR OTHERWISE USED IN ANY WAY WITHOUT THE ADVANCED EXPRESS WRITTEN CONSENT OF tBP/ARCHITECTURE.

drawing title:
PLUMBING DETAILS

drawing no.:
P7-2

drawing of

ABBREVIATIONS

(E)	
(N)	NEW
AFF	ABOVE FINISHED FLOOR
AFSR	AUTOMATIC FIRE SPRINKLER RISER
BFV	BUTTERFLY VALVE
DCDA	DOUBLE CHECK DETECTOR ASSEMBLY
DI	DUCTILE IRON
DN	DOWN
FACP	FIRE ALARM CONTROL PANEL
FDC	FIRE DEPARTMENT CONNECTION
FH	FIRE HYDRANT
PIV	POST INDICATOR VALVE
POC	POINT OF CONNECTION
PVC	POLYVINYL CHLORIDE
RN	RISER NIPPLE
SSP	STANDARD SPRAY PENDANT
SSU	STANDARD SPRAY UPRIGHT
UG	UNDERGROUND

BUILDING DATA

PROJECT OWNER: COMPTON COMMUNITY COLLEGE DISTRICT
1111 E. ARTESIA BLVD.
COMPTON, CA 90221

PROJECT DESCIPTION: INSTALL NEW WET PIPE SPRINKLER SYSTEM IN NEW INSTRUCTIONAL BUILDING NO. 2

OVERALL BUILDING SIZE: 30,200 SF TWO STORY SCHOOL BUILDING

OCCUPANCY GROUP: A-3

CONSTRUCTION TYPE: TYPE II-B SPRINKLED

STRUCTURAL FRAME:	0 HOURS
INTERIOR NON-BEARING PARTITION	0 HOURS
FLOORS AND ROOF:	0 HOURS

GROSS FLOOR AREAS: NEW

1ST FLOOR	16,000 SF
2ND FLOOR	14,200 SF
TOTAL	30,200 SF

SPRINKLER DESIGN CRITERIA: CLASSROOMS, OFFICE SPACES, COORIDORS RESTROOMS AND ALL OTHER AREAS NOT NOTED BELOW (UNDER ORDINARY HAZZARD).

CLASSIFICATION OF OCCUPANCY: LIGHT HAZZARD
DESIGN DENSITY: 0.10 GPM/ SQ.FT.
DESIGN AREA MIN.: 1,500 SQ.FT.
AREA OF COVERAGE/ SP HEAD: 225 SQ.FT. MAX/ HEAD

SPRINKLER DESIGN CRITERIA: MECHANICAL, ELECTRICAL, TELECOM, CUSTODIAL & STORAGE ROOMS

CLASSIFICATION OF OCCUPANCY: ORDINARY HAZZARD II
DESIGN DENSITY: 0.15 GPM/ SQ.FT.
DESIGN AREA MIN.: 1,500 SQ.FT.
AREA OF COVERAGE/ SP HEAD: 130 SQ.FT. MAX/ HEAD

GOVERNING CODES:

2016 BUILDING CODE (CBC)
2016 FIRE CODE (CFC)
NFPA 13 AUTOMARIC SPRINKLER SYSTEMS
NFPA 14 STANDPIPE SYSTEMS
NFPA 22/24 WATER TANKS FOR PRIVATE FIRE PROTECTION PRIVATE FIRE MAINS
NFPA 72 NATIONAL FIRE ALARM CODE
NFPA 80 FIRE DOORS AND OTHER OPENING PROTECTIVES

FIRE PROTECTION NOTES

1 A LICENSED (C-16) CONTRACTOR SHALL ROUTE AND SUPPORT AUTOMATIC SPRINKLER SYSTEM PER REQUIREMENTS OF NFPA 13 (2016), CBC CHAPTER 9, NFPA 25 (2011) AND ANY OTHER APPLICABLE CODE PER AHJ.

2 EXISTING WORK DAMAGED OR CUT INTO DURING CONSTRUCTION SHALL BE PATCHED OR REPAIRED, PAINTED AND FINISHED TO MATCH EXISTING FINISHES.

3 NO HOLES SHALL BE DRILLED OR CUT IN OR THROUGH ANY STRUCUTURAL ELEMENT WITHOUT WRITTEN APPROVAL OF THE ARCHITECT AND STRUCTURAL ENGINEER.

4 SEE SPECIFICATION SECTION 211000 FOR ADDITIONAL REQUIREMENTS.

5 ALL DEVICES AND COMPONENTS TO BE EITHER LISTED BY A NATIONALY RECOGNIZED TESTING LABORATORY FOR PIRE PROTECTION SERVICE OR APPROVED BY THE AUTHORITY HAVING JURISDICTION.

6 THE FIRE SPRINKLER SYSTEM SHALL BE MONITORED BY AN APPROVED LISTED CENTRAL MONITORING STATION.

7 A SPARE SPINKLER CABINET SHALL BE INSTALLED NEAR THE RISER WITH THE QUANTITY OF SPARE SPRINKLERS REQUIED PER NFPA 13 SECTION 6.2.9.

8 PIPE SIZES SHOWN ON DRAWINGS ARE NOMINAL (NPS). LENGTHS OF PIPE ARE CENTER TO CENTER DIMENSIONS.

9 ITEMS SHOWN ON PLANS DESCRIBE GENERAL LAYOUT REQUIREMENTS, AND ARE NOT INTENDED TO SHOW A COMPLETE LAYOUT OF REQUIRED FIRE PROTECTION SYSTEM PIPING AND COMPONENTS. REFER TO ARCHITECTURAL, MECHANICAL AND PLUMBING SHEETS, FIRE PROTECTION SPECIFICATIONS, AS WELL AS OTHER PORTIONS OF THE CONTRACT DOCUMENTS FOR ADDITIONAL COORDINATION REQUIREMENTS.

10 THE LAYOUT REQUIREMENTS DESCRIBED IN THESE PLANS SHALL BE ADHERED TO AS CLOSELY AS POSSIBLE BUT SHALL NOT SUPERSEDE CODE CONSTRAINTS AND/OR REQUIREMENTS OF AUTHORITIES HAVING JURISDICTION (AHJ'S). WHERE CODE OR AHJ REQUIREMENTS SUPERSEDE ITEMS SHOWN ON THIS PLAN, CONTRACTOR SHALL INCLUDE ALL ASSOCIATED PROVISIONS IN THE BID, AND SHALL MAKE THEM AT NO ADDITIONAL COST TO THE OWNE. PROPOSED DEVIATIONS FROM THIS PLAN SHALL BE SUBJECT TO ENGINEER OF RECORD REVIEW AND APPROVAL PRIOR TO IMPLEMENTATION.

11 ALL AREAS OF THE BUILDING NOT COVERED BY NOTES HERIN SHALL BE FULLY SPRINKLED IN ACCORDANCE WITH SPECIFICATIONS AND NFPA 13

12 WHERE PLAN INDICATES EXPOSED FIRE SPRINKLER PIPING DIRECTION OF LAYOUT, ASSOCAITED CONNECTED FIRE SPRINKLER PIPING RUNNING IN PERPENDICULAR DIRECTIONS SHALL BE INSTALLED ONLY IN CONCEALED LOCATIONS UNLESS INDICATED OTHERWISE.

13 INSTALLING CONTRACTOR TO FIELD VERIFY ALL EXISTING CONDITIONS AND IS RESPONSIBILE FOR PREPAIRING A DESIGN TO ACCOMODATE ALL EXISTING CONDITIONS.

14 EXPOSED FIRE SPRINKLER SYSTEM PIPING SHALL BE RUN STRAIGHT AND TIGHT TO UNDERSIDE OF STRUCTURAL MEMEBERS.

15 ALL WORK AND MATERIALS SHALL BE PERFORMED AND INSTALLED IN COMPLIANCE WITH THE FOLLOWING CODES AS AMENDED AND ADOPTED BY THE INSPECTION AUTHORITY. NOTHING IN THESE PLANS IS TO BE CONSTRUCTED TO PERMIT WORK NOT CONFORMING TO THESE CODES OR OTHERS APPLICABLE TO THIS PROJECT.
A. SEISMIC RESTRAINT: ALL HUNG PIPING SHALL CONFORM TO NFPA 13, SECTION 9.3.
B. LATERAL BRACING MAY BE ELIMINATED IF PIPING 2-1/2" AND LARGER IS SUSPENDED BY INDIVIDUAL HANGERS 6" OR LESS IN LENGTH FROM THE TOP OF PIPE TO THE BOTTOM OF THE ATTACHMENT TO STRUCTURE.
C. NO TRAPEZE ASSEMBLIES SHALL BE USED TO SUPPORT PIPING.
D. WHERE LATERAL RESTRAINTS ARE OMITTED PIPING SHALL BE INSTALLED SUCH THAT LATERAL MOTION OF THE PIPING WILL NOT CAUSE DAMAGING IMPACT WITH OTHER SYSTEMS OR STRUCTURAL MEMBER, OR LOSS OF VERTICAL SUPPORT.
IF AT THE CONTRACTOR'S OPTION, PIPING IS NOT INSTALLED IN CONFORMANCE WITH THESE CONDITIONS, THE CONTRACTOR SHALL SUBMIT SHOP DRAWINGS (1/4" = 1'-0") OF SEISMIC BRACING SYSTEM IN ACCORDANCE WITH "MASON INDUSTRIES" SEISMIC RESTRAINTS GUIDELINES FOR SUSPENDING PIPING AND DUCTWORK (OR APPROVED EQUAL) TO THE ARCHITECT FOR APPROVAL.

16 THE STRUCTURAL ENGINEER OF RECORD SHALL BE RESPONSIBLE TO VERIFY THE ADEQUANCY OF THE STRUCTURE TO SUPPORT THE HANGER AND BRACING LOADS.

17 THE CONTRACTOR SHALL SURVEY EXISTING FIELD CONDITIONS PRIOR TO BIDDING. IF AWARDED THE CONTRACT, THE CONTRACTOR SHALL SURVEY EXISTING FIELD CONDITIONS IN DETAIL AND COORDINATE THE WORK WITH EXISTING BUILDING SYSTEMS.

18 ANY DAMAGE TO NEW BUILDING ARCHITECTURAL, STRUCTURAL, MECHANICAL, AND ELECTRICAL SYSTEMS THAT OCCURS DURING THE WORK SHALL BE RESTORED TO THE ORIGINAL CONDITION AT THE CONTRACTOR'S EXPENSE. IF LANDSCAPED AREAS INCLUDING NATURAL SPACES MUST BE USED FOR BUILDING ACCESS, THE LANDSCAPING SHALL BE RETURNED TO IT ORIGINAL CONDITION. THE CONTRACTOR SHALL INCLUDE COSTS IN THE BID FOR THIS WORK IF THIS APPROACH IS USED. THE OWNER WILL NOT PAY ANY ADDITIONAL COSTS TO COVER DAMAGE TO THE BUILDING SYSTEMS, LANDSCAPING OR DRIVE AREAS.

19 COORDINATE THE FOLLOWING WITH ARCHITECTURAL, STRUCTURAL, MECHANICAL, PLUMBING AND ELECTRICAL SRAWINGS AND ELEMENTS AS INSTALLED, INCLUDING EXISTING BUILDING SYSTEMS:
A. EXACT LOCATION OF ALL EQUIPMENT.
B. ALL PENETRATIONS THRU ROOF, WALLS AND FLOORS.
C. EXACT SIZE AND ROUTING OF PIPING.

20 DRAWINGS INDICATE DIAGRAMMATICALLY THE ARRANGEMENT OF PRINCIPAL APPARATUS, PIPING, AND OTHER MATERIAL. FOLLOW DRAWING AS CLOSELY AS POSSIBLE, INORDER TO ACHIEVE A NEAT ARRANGEMENT OF PIPING AND EQUIPMENT WHILE STILL OVERCOMING OBSTRUCTIONS.

21 INSTALLATION OF THE SPRINKLER SYSTEM SHALL NOT BE STARTED UNTIL COMPLETE PLANS AND SPECIFICATIONS, INCLUDING WATER SUPPLY INFORMATION, HAVE BEEN APPROVED BY THE LOCAL FIRE MARSHALL. AT VARIOUS STAGES AND UPON COMPLETION, THE SYSTEM MUST BE TESTED IN THE PRESENCE OF THE LOCAL AUTHORITY HAVING JURISDICTION.

22 ALL EXISTING FIRE PROTECTION SYSTEMS SHALL REMAIN IN OPERATION DURING PHASES OF CONTRUCTION. NO SYSTEMS ARE TO BE SHUTDOWN WITHOUT AUTHORIZATION FROM THE OWNER AND LOCAL FIRE DISTRICT.

23 THE LOCATION OF FIRE SPRINKLER HEADS SHALL BE COORDINATED WITH THE NEW CEILING LAYOUTS AND ALL OTHER TRADES FOR COMPLETE FORE PROTECTION COVERAGE OF ALL AREAS. PROVIDE DETAILED PLANS FOR APPROVAL PRIOR TO INSTALLATION.

24 HEADS SHALL BE SYMMETRICALLY LOCATED IN CENTER OF CEILING PANELS. COORDINATE LAYOUT WITH CEILING OR SOFFIT LIGHT FIXTURES, AND HVAC DIFFUSERS,RETURNS, ETC. PROVIDE PENDENT AND/OR UPRIGHT TYPE SPRINKLER HEAD WHERE REQUIRED.

25 WORKMANSHIP:
ALL WORK SHALL BE DONE IN A NEAT AND WORKMANLIKE MANNER ACCORDING TO THE BEST TRADE PRACTICE BY THOSE SKILLED IN THE PARTICULAR TRADE. PIPES, EQUIPMENT, ETC., TO BE INSTALLED LEVEL, SQUARE OR CENTERED, ETC., TO GIVE A NEAT AND PLEASING APPEARANCE. ALL EQUIPMENT IS TO BE INSTALLED STRICTLY PER MANUFACTURER'S RECOMMENDATIONS. COORDINATE ALL WORK WITH OTHER TRADES.

26 THE ANNULAR SPACE BETWEEN PIPE SLEEVESAND THE PIPE THEOUGH ALL RATED WALLS AND FLOORS SHALL BE FIRESTOPPED. FIRESTOPPING OF ALL PIPE PENETRATIONS OF ALL PIPE PENETRATIONS SHALL COMPLY WITH U.L. REQUIREMENTS. MANUFACTURER PREAPPROVED UL PENETRATION FOR PIPE MATERIAL AND SURFACE PENETRATED SHALL BE USED. PENETRATIONS SHALL BE 3M, PROSET, OR APPROVED EQUAL. SUBMIT SHOP DRAWINGS.

27 BY OTHERS:
D. ELECTRICAL CONTRACTOR: ALL POWER AND ALARM WIRING, CONDUITS, DISCONNECTS, AND FINAL CONNECTIONS. NO FIELD SUPPLIED ELECTRICAL DEVICE SHALL BE MOUNTED ON PIPING AND NO RIGID ELECTRICAL CONNECTIONS SHALL BE MADE.
E. GENERAL CONTRACTOR: CUTTING, FRAMING, PATCHING, FURRING, AND PAINTING.

28 ALL MATERIALS AND EQUIPMENT INSTALLED UNDER THIS CONTRACT SHALL BE GUARANTEED FREE FROM ALL FIRE PROTECTION, ELECTRICAL AND WORKMANSHIP DEFECTS FOR A PERIOD OF ONE YEAR FROM DATE OF FINAL ACCEPTANCE. THE CONTRACTOR SHALL BE RESPOSIBLE FOR ALL DAMAGES TO THE PREMISES CAUSED BY LEAKS AND/OR BREAKS IN PIPES AND FIXTURES INSTALLED UNDER THIS CONTRACT.

29 IT IS THE INTENTION OF THE PLANS AND SPECIFICATIONS TO COVER ALL THINGS REQUIRED TO PROVIDE COMPLETE AND OPERATIVE SYSTEMS. THE CONTRACTOR IS TO FURNISH ALL LABOR, MATERIALS, TRANSPORTATION, EQUIPMENT, MISCELLANEOUS SERVICES, ETC., REQUIRED TO NECESSARY PART OF THE INSTALLATION IS TO BEINCLUDED, WHETHER SPECIFICALLY SHOWN OR MENTIONED. THE ENGINEER WILL GIVE ANY INTERPRETATIONS NECESSARY FOR THE CONTRACTOR TO PROPERLY ESTIMATE THE JOB.

30 IT IS THE CONTRACTORS' RESPONSIBILITY TO PROVIDE TO PROVIDE FABRICATION OR SHOP DRAWINGS. CAD FILES WILL NOT BE PROVIDED.

SHEET INDEX

FP0-1	GENERAL NOTES, LEGENDS & ABBREVIATIONS
FP0-2	SITE PLAN
FP1-1	FLOOR PLAN - FIRST FLOOR
FP1-2	FLOOR PLAN - SECOND FLOOR
FP2-1	RCP - FIRST FLOOR
FP2-2	RCP - SECOND FLOOR
FP5-1	BUILDING SECTIONS
FP6-1	ISOMETRIC VIEWS
FP7-1	DETAILS

4/8/2019 6:11:44 PM

IDENTIFICATION STAMP
DIV. OF THE STATE ARCHITECT
APP. 03-119458 INC:
REVIEWED FOR
SS ☑ FLS ☑ ACS ☑
DATE:05/23/2019

DIVISION OF THE STATE ARCHITECT
355 South Grand Avenue, Suite 2100
Los Angeles, CA 90012
ph: (213) 897-3995 fx:(213) 897-3159
agency

tBP architecture planning interiors
tBP/Architecture
4611 Teller Avenue
Newport Beach, CA 92660
ph: 949.673.0300 fx: 949.732.3895
architect

CAPITAL ENGINEERING CONSULTANTS, INC.
LONG BEACH, CALIFORNIA
CM - RH/SL/TS 171221.00
PM - DESIGN TEAM PROJECT NO.

REGISTERED PROFESSIONAL ENGINEER
CHRISTOPHER V. MERCURIO
M 34011
EXPIRES 3/30/20
MECHANICAL
STATE OF CALIFORNIA
DATE SIGNED: 04/05/19
consultant

COMPTON COLLEGE
INSTRUCTIONAL BUILDING No.2
COMPTON COMMUNITY COLLEGE DISTRICT
1111 E. ARTESIA BLVD. COMPTON, CA.
owner

tBP project number: 20998.00
file name:
drawn by: checked by:
date: 11 / 20 / 2018
rev: date: description:

THIS DRAWING AND THE DESIGNS, DEPICTIONS, IDEAS AND OTHER INFORMATION CONTAINED HEREIN CONSTITUTE UNPUBLISHED WORK OF tBP/ARCHITECTURE AND SHALL REMAIN PROPERTY OF tBP/ARCHITECTURE IN PERPETUITY. NO PART THEREOF SHALL BE REPRODUCED, DISCLOSED, DISTRIBUTED, SOLD, PUBLISHED OR OTHERWISE USED IN ANY WAY WITHOUT THE ADVANCED EXPRESS WRITTEN CONSENT OF tBP/ARCHITECTURE.

drawing title:
GENERAL NOTES, LEGENDS & ABBREVIATIONS

drawing n
FP0-1
drawing of

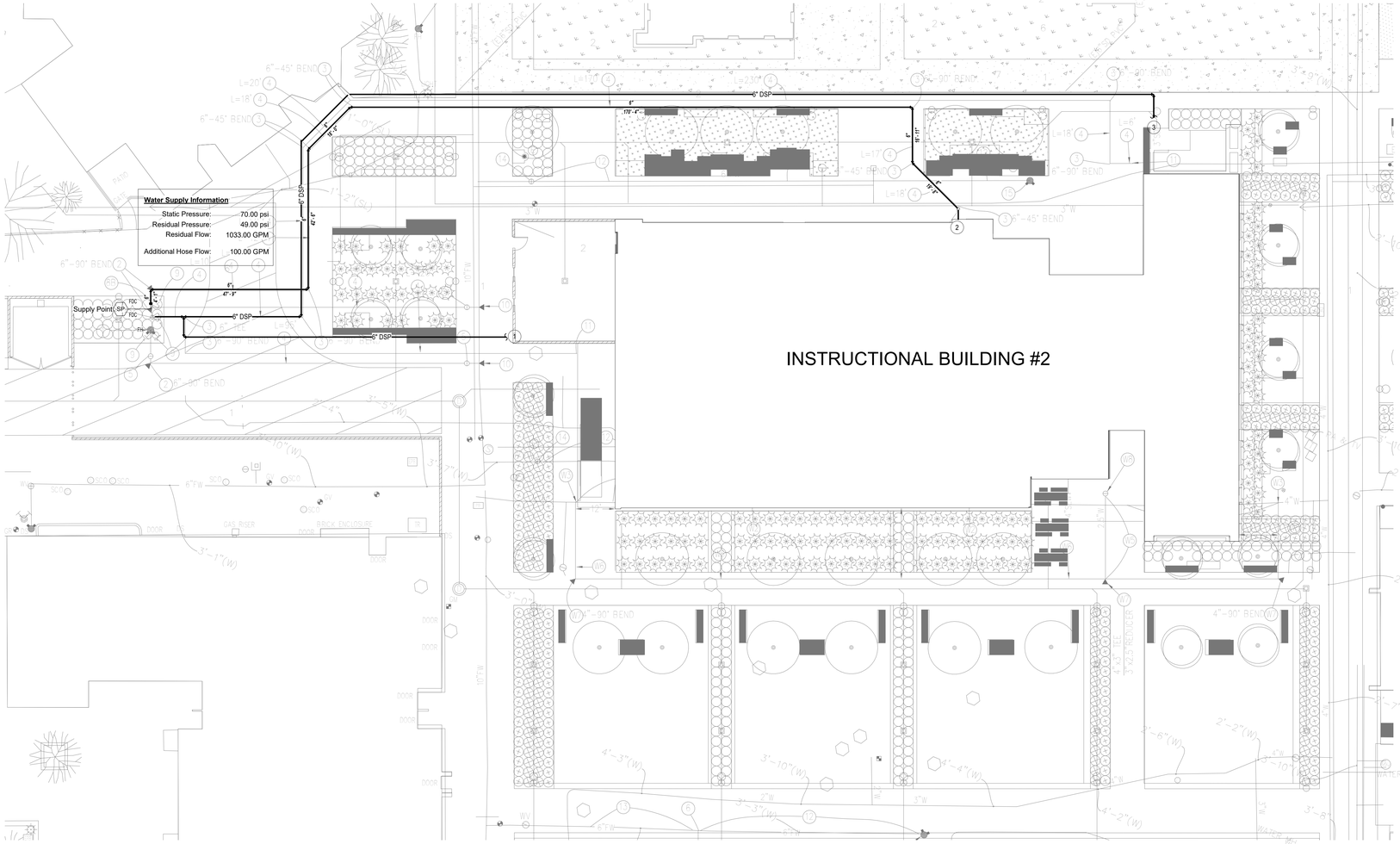

FIRE SPRINKLER SITE PLAN
SCALE1/16" = 1'-0"

1

NORTH

HYDRANT FLOW TEST FORM
CITY OF COMPTON WATER UTILITY DIVISION
205 S Willowbrook Ave.,Compton CA 90220
Phone (310) 605-5524 Fax (310) 763-

4567

I.PROJECT INFORMATION(TO BE FILLED BY APPLICANT)
Company Address:
Project Address:_____COMPTON CITY COLLEGE_____
Nearest Cross Street/Distance (ft)
Occupancy(Use fo Building)
Square Footage :

II.**FLOW TEST DATA (TO BE COMPLETED BY WATER UTILITY DIVISION)**
FLOW HYDRANT:__205717__✓ NEW ATLAS PAGE :_M66_✓
GATEBOOK PAGE:_ HYDRANT # _OUTLET DIAMETER : 2 ½" ✓
SIZE & MATERIAL OF WATER MAIN:___NA____
TOTAL GALLONS DISCHARGED___3308.31 gallons___ ✓

Pitot PSI_37.95_Observed Flow (GPM)_1033.098_✓

Duration of Flow_2 mins___ Date and Time ___2018-05-09 from 11:07:20 to 11:09:20 am

TEST(RESIDUAL) HYDRANT: _205715 _ ✓ NEW ATLAS PAGE___M66__✓

GATEBOOK PAGE___HYDRANT # _____
SIZE &MATERIAL OF WATER MAIN:___NA_____
Static PSI__70.63_✓ Residual PSI_49.45_✓ FIREFLOW gpm @20 PSI__1654____
TEST(RESIDUAL) HYDRANT:_205714_ ✓ NEW ATLAS PAGE___M66____

GATEBOOK PAGE___HYDRANT # _____
SIZE &MATERIAL OF WATER MAIN:___NA_____
Static PSI__70.49_✓ Residual PSI_49.05 ✓ FIREFLOW gpm @20 PSI_1641 ✓

III. **PUBLIC FIRE HYDRANT FIREFLOW REQUIREMENTS (TO BE COMPLETED BY WATER UTILITY DIVISION)**

_____ _____ALEX SANTOS_____
Signature of Water Utility Division Witness Please Print Name
TIME _12:02_____(pm)
DATE_2018___/MAY_/_09 TITLE_____WATER PRODUCTION SUPERVISOR__

IV. **TESTER INFORMATION**
Flow Test Conducted by:_D BENNETT_____ Phone (310_)___605-5690__
Tester Name
Business License # _____
Company Address:_____

Date_____/_____/_____ Signature_____

Fire Flow Calculator

	GREEN	GREEN	
Hydrant Locations:			
Flowed Hydrant Designation	COMPTON COLLEGE B	COMPTON COLLEGE B	
Residual Hydrant Designation	COMPTON COLLEGE A	COMPTON COLLEGE C	
Flow Calculation Data:			
Static psi before flowing	70.63	70.49	psi
Residual psi while flowing	49.45	49.05	psi
Pitot psi gage reading	37.95	37.95	psi
Diameter size of opening tested	2.50	2.50	inches
GPM from the test outlet	1033.10	1033.10	gpm
Projected available hydrant flow in GPM @ 20 psi	1654.00	1641.00	gpm

KEYNOTES:

1. 4" DRY TYPE STAND PIPE FIRE DEPARTMENT CONNECTION AT TOP OF LANDING. SEE FP1-1 & FP1-2 FOR CONTINUATION.
2. 6" FIRE WATER LINE SERVING BUILDING.
3. 4" DRY TYPE STAND PIPE FIRE DEPARTMENT CONNECTION AT 2ND FLOOR AND ROOF LANDINGS. SEE FP1-1 & FP1-2 FOR CONTINUATION.

SHEET NOTES:

1. SITE UNDERGROUND PIPE AND APPURTENANCES AS SHOWN ON SITE PLAN ARE FOR REFERENCE AND CONTINUITY OF HYDRAULIC CALCULATIONS ONLY. WORK WITHIN THIS CONTRACT TO START AT A POINT 6" ABOVE FINISHED FLOOR AT RISER LOCATION PER PLAN SEE DETAIL 1/FP7-1.
2. REFER TO CIVIL DRAWINGS C1.5 FOR UNDERGROUND UTILITY ROUTINGS INCLUDING THRUST BLOCK LOCATIONS, FIRE DEPARTMENT CONNECTIONS, POST INDICATOR VALVES AND ADDITIONAL INFORMATION.
3. THIS PROJECT SITE HAS A DEDICATED FIRE WATER CAMPUS LOOP.
4. REFER TO FP6-1 FOR OVERALL CALCULATION NODE LAYOUT.

IDENTIFICATION STAMP
DIV. OF THE STATE ARCHITECT
APP. 03-119458 INC:
REVIEWED FOR
SS ☑ FLS ☑ ACS ☑
DATE:05/23/2019

DIVISION OF THE STATE ARCHITECT
355 South Grand Avenue, Suite 2100
Los Angeles, CA 90012
ph: (213) 897-3995 fx:(213) 897-3159

agency

tBP architecture planning interiors

tBP/Architecture
4611 Teller Avenue
Newport Beach, CA 92660
ph: 949.673.0300 fx. 949.732.3895

architect

CAPITAL ENGINEERING CONSULTANTS, INC.
LONG BEACH, CALIFORNIA
CM - RH/SL/TS 171221.00
PM - DESIGN TEAM PROJECT NO.

REGISTERED PROFESSIONAL ENGINEER
ROBERT V. RUSSELL
M 34011
EXPIRES 3/2020
MECHANICAL
STATE OF CALIFORNIA
DATE SIGNED: 04/05/19

consultant

COMPTON COLLEGE
INSTRUCTIONAL BUILDING No.2
COMPTON COMMUNITY COLLEGE DISTRICT
1111 E. ARTESIA BLVD. COMPTON, CA.

owner

tBP project number: 20998.00
file name:
drawn by: checked by:
date: 11 / 20 / 2018

rev:	date:	description:

THIS DRAWING AND THE DESIGNS, DEPICTIONS, IDEAS AND OTHER INFORMATION CONTAINED HEREIN CONSTITUTE UNPUBLISHED WORK OF tBP/ARCHITECTURE AND SHALL REMAIN PROPERTY OF tBP/ARCHITECTURE IN PERPETUITY. NO PART THEREOF SHALL BE REPRODUCED, DISCLOSED, DISTRIBUTED, SOLD, PUBLISHED OR OTHERWISE USED IN ANY WAY WITHOUT THE ADVANCED EXPRESS WRITTEN CONSENT OF tBP/ARCHITECTURE.

drawing title:
SITE PLAN

drawing n
FP0-2

drawing of

4/8/2019 8:29:37 AM

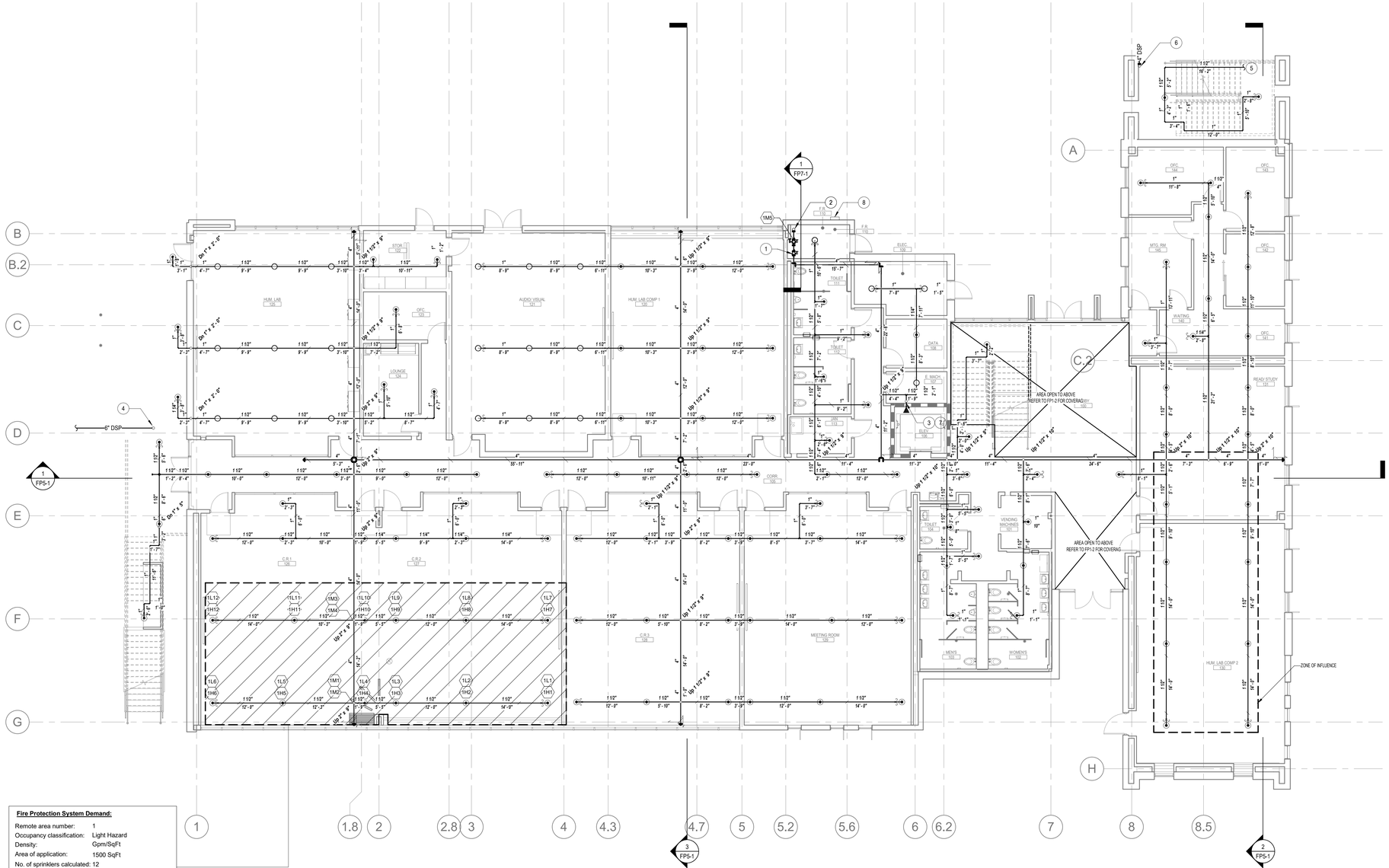

Fire Protection System Demand:

Remote area number:	1
Occupancy classification:	Light Hazard
Density:	Gpm/SqFt
Area of application:	1500 SqFt
No. of sprinklers calculated:	12
Inside Hose Streams:	0 GPM
Outside Hose Streams:	100 GPM
Total water required (including hose streams):	344.946 GPM
@ a required system pressure of:	31.9375 Psi

1ST FLOOR SPINKLER PLAN

SCALE 1/8" = 1'-0" (1)

SPRINKLER HEAD SCHEDULE AND LEGEND - 1ST FLOOR

SYMBOL	COUNT	LOCATION	MANUFACTURER	SIN#	K-FACTOR	RESPONSE	DECRIPTION	TEMP.	FINISH	THREAD SIZE	COMMENTS
○	22	EXPOSED STRUCTURE	VIKING	VK300	5.6	Quick	SSU	155 °F	BRASS	1/2"	UPRIGHT
◀	1	ELEVATOR PIT/ SIDEWAL	VIKING	VK305	5.6	Quick	-	175 °F	BRASS	1/2"	SIDEWALL
⊙	114	GYP. BRD. ACC. TILE	VIKING	VK462	5.6	Quick	SSP	155 °F	-	1/2"	PENDENT

LEGEND:

- HANGER
- LATERAL BRACING
- LONGITUDINAL BRACING
- END OF LINE RESTRAINT
- (X) HYDRAULIC REFERENCE POINTS (NODES)

KEYNOTES:

1. 4" FIRE RISER TO 1ST FLOOR SPRINKLER SYSTEM.
2. 4" FIRE RISER TO 2ND FLOOR SPRINKLER SYSTEM.
3. SIDEWALL SPRINKLER TO BE INSTALLED WITHIN 24" OF THE BOTTOM OF PIT PER NFPA 13, SEC. 8.15.5.1. PROVIDE TAMPER SWITCH AND INTERLOCK WITH FIRE ALARM PANEL.
4. 4" DRY STANDPIPE UP TO 2ND FLOOR STAIR LANDING.
5. 1-1/2" FIRE ATER LINE UNDERNEATH STAIR, SEE FP1-2 FOR CONTINUATION.
6. 4" DRY STANDPIPE UP TO 2ND FLOOR LANDING & ROOF.
7. FIRE RATED WALL PENETRATION SEE DETAIL 6/FP7-1 (TYP.).
8. 6" ELECTRICAL FIRE ALARM BELL.

SHEET NOTES:

1. PENDANT FIRE SPRINKLERS ARE TO BE LOCATED IN THE CENTERLINE OF THE CEILING TILE IN THE 2'-0" DIMENSION AND AT 12" INCREMENTS IN THE 4'-0" DIMENSION (TYP).
2. PROVIDE END OF LINE RESTAINTS AS REQUIRED PER NFPA 13 SEC. 9.3.6.1
3. UNSUPPORTED ARM OVER LENGTHS SHALL BE LESS THAN 24"

4/8/2019 6:11:51 PM

IDENTIFICATION STAMP
DIV. OF THE STATE ARCHITECT
APP. 03-119458 INC:
REVIEWED FOR
SS ☑ FLS ☑ ACS ☑
DATE:05/23/2019

DIVISION OF THE STATE ARCHITECT
355 South Grand Avenue, Suite 2100
Los Angeles, CA 90012
ph: (213) 897-3995 fx:(213) 897-3159

agency

tBP architecture planning interiors

tBP/Architecture
4611 Teller Avenue
Newport Beach, CA 92660
ph: 949.673.0300 fx: 949.732.3895

architect

CAPITAL ENGINEERING CONSULTANTS, INC.
LONG BEACH, CALIFORNIA
CM - RH/SL/TS — PM - DESIGN TEAM
1712221.00 — PROJECT NO.

REGISTERED PROFESSIONAL ENGINEER
CHRISTOPHER V. REYES
M 34011
EXPIRES 9/30/20
MECHANICAL
STATE OF CALIFORNIA

DATE SIGNED: 04/05/19

consultant

COMPTON COLLEGE
INSTRUCTIONAL BUILDING No.2
COMPTON COMMUNITY COLLEGE DISTRICT
1111 E. ARTESIA BLVD. COMPTON, CA.

owner

tBP project number: 20998.00
file name:
drawn by: checked by:
date: 11 / 20 / 2018

rev:	date:	description:

THIS DRAWING AND THE DESIGNS, DEPICTIONS, IDEAS AND OTHER INFORMATION CONTAINED HEREIN CONSTITUTE UNPUBLISHED WORK OF tBP/ARCHITECTURE AND SHALL REMAIN PROPERTY OF tBP/ARCHITECTURE IN PERPETUITY. NO PART THEREOF SHALL BE REPRODUCED, DISCLOSED, DISTRIBUTED, SOLD, PUBLISHED OR OTHERWISE USED IN ANY WAY WITHOUT THE ADVANCED EXPRESS WRITTEN CONSENT OF tBP/ARCHITECT.

drawing title:
FLOOR PLAN - FIRST FLOOR

drawing n
FP1-1
drawing of

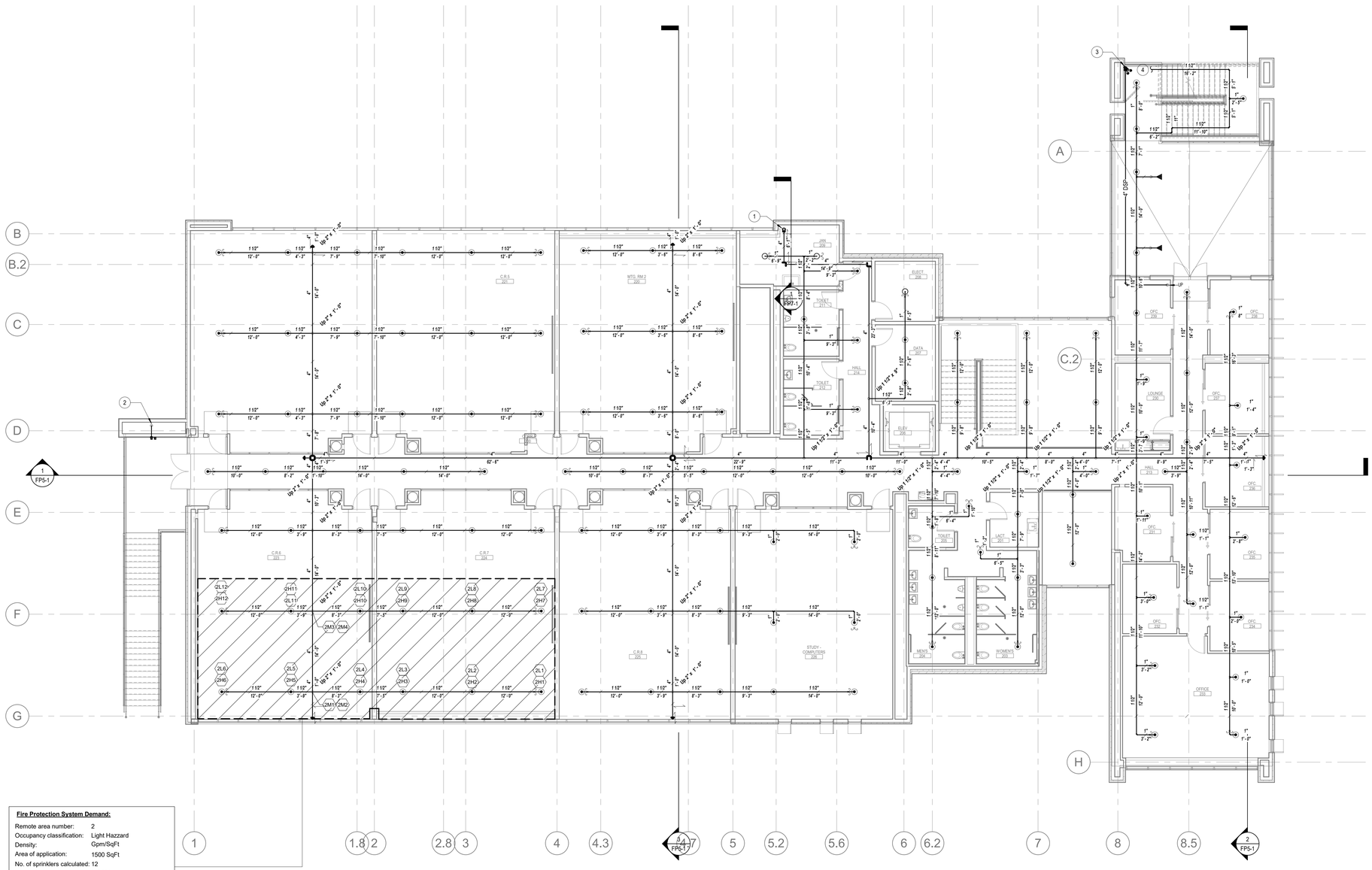

Fire Protection System Demand:

Remote area number:	2
Occupancy classification:	Light Hazzard
Density:	Gpm/SqFt
Area of application:	1500 SqFt
No. of sprinklers calculated:	12
Inside Hose Streams:	0 GPM
Outside Hose Streams:	100 GPM
Total water required (including hose streams):	350.743 GPM
@ a required system pressure of:	40.6514 Psi

2ND FLOOR SPRINKLER PLAN 1

SCALE 1/8" = 1'-0"

SPRINKLER HEAD SCHEDULE AND LEGEND - 2ND FLOOR

SYMBOL	COUNT	LOCATION	MANUFACTURER	SIN#	K-FACTOR	RESPONSE	DECRIPTION	TEMP.	FINISH	THREAD SIZE	COMMENTS
○	3	EXPOSED STRUCTURE	VIKING	VK300	5.6	Quick	SSU	155 °F	BRASS	1/2"	UPRIGHT
◄	2	ELEVATOR PIT/ SIDEWAL	VIKING	VK305	5.6	Quick	-	175 °F	BRASS	1/2"	SIDEWALL
⊙	122	GYP. BRD. ACC. TILE	VIKING	VK462	5.6	Quick	SSP	155 °F	-	1/2"	PENDENT

LEGEND:

- HANGER
- LATERAL BRACING
- LONGITUDINAL BRACING
- END OF LINE RESTRAINT
- (X) HYDRAULIC REFERENCE POINTS (NODES)

KEYNOTES:

1. 4" FIRE RISER TO 2ND FLOOR SPRINKLER SYSTEM.
2. 4" DRY STANDPIPE FROM BELOW.
3. 4" DRY STANDPIPE FROM BELOW, ROUTED HORIZTOANLLY ON 2ND FLOOR UP TO ROOF.
4. 1-1/2" FIRE WATER LINE UNDERNEATH STAIR, SEE FP1-1 FOR CONTINUATION.

SHEET NOTES:

1. PENDANT FIRE SPRINKLERS ARE TO BE LOCATED IN THE CENTERLINE OF THE CEILING TILE IN THE 2'-0" DIMENSION AND AT 12" INCREMENTS IN THE 4'-0" DIMENSION (TYP).
2. PROVIDE END OF LINE RESTAINTS AS REQUIRED PER NFPA 13 SEC. 9.3.6.1
3. UNSUPPORTED ARM OVER LENGTHS SHALL BE LESS THAN 24"

IDENTIFICATION STAMP
DIV. OF THE STATE ARCHITECT
APP. 03-119458 INC:
REVIEWED FOR
SS ☑ FLS ☑ ACS ☑
DATE:05/23/2019

DIVISION OF THE STATE ARCHITECT
355 South Grand Avenue, Suite 2100
Los Angeles, CA 90012
ph: (213) 897-3995 fx:(213) 897-3159

agency

tBP architecture planning interiors

tBP/Architecture
4611 Teller Avenue
Newport Beach, CA 92660
ph: 949.673.0300 fx: 949.732.3895

architect

CAPITAL ENGINEERING CONSULTANTS, INC.
LONG BEACH, CALIFORNIA
CM - RH/SL/TS 171221.00
PM - DESIGN TEAM PROJECT NO.

REGISTERED PROFESSIONAL ENGINEER
CHRISTOPHER V. MERCURY
M 34011
EXPIRES 12/31/20
MECHANICAL
STATE OF CALIFORNIA

DATE SIGNED: 04/05/19

consultant

COMPTON COLLEGE
INSTRUCTIONAL BUILDING No.2

COMPTON COMMUNITY COLLEGE DISTRICT
1111 E. ARTESIA BLVD. COMPTON, CA.

owner

tBP project number: 20998.00
file name:
drawn by: checked by:
date: 11 / 20 / 2018

rev:	date:	description:

THIS DRAWING AND THE DESIGNS, DEPICTIONS, IDEAS AND OTHER INFORMATION CONTAINED HEREIN CONSTITUTE UNPUBLISHED WORK OF tBP/ARCHITECTURE AND SHALL REMAIN PROPERTY OF tBP/ARCHITECTURE IN PERPETUITY. NO PART THEREOF SHALL BE REPRODUCED, DISCLOSED, DISTRIBUTED, SOLD, PUBLISHED OR OTHERWISE USED IN ANY WAY WITHOUT THE ADVANCED EXPRESS WRITTEN CONSENT OF tBP/ARCHITECTURE.

drawing title:
FLOOR PLAN - SECOND FLOOR

drawing n
FP1-2

drawing of

4/8/2019 6:11:56 PM

1ST FLOOR SPRINKLER RCP (1)
SCALE 1/8" = 1'-0"

SPRINKLER HEAD SCHEDULE AND LEGEND - 1ST FLOOR											
SYMBOL	COUNT	LOCATION	MANUFACTURER	SIN#	K-FACTOR	RESPONSE	DECRIPTION	TEMP.	FINISH	THREAD SIZE	COMMENTS
○	22	EXPOSED STRUCTURE	VIKING	VK300	5.6	Quick	SSU	155 °F	BRASS	1/2"	UPRIGHT
◀	1	ELEVATOR PIT/ SIDEWAL	VIKING	VK305	5.6	Quick	-	175 °F	BRASS	1/2"	SIDEWALL
⊙	114	GYP. BRD. ACC. TILE	VIKING	VK462	5.6	Quick	SSP	155 °F	-	1/2"	PENDENT

LEGEND:

- HANGER
- LATERAL BRACING
- LONGITUDINAL BRACING
- END OF LINE RESTRAINT
- (X) HYDRAULIC REFERENCE POINTS (NODES)

KEYNOTES:

SHEET NOTES:

1. PENDANT FIRE SPRINKLERS ARE TO BE LOCATED IN THE CENTERLINE OF THE CEILING TILE IN THE 2'-0" DIMENSION AND AT 12" INCREMENTS IN THE 4'-0" DIMENSION (TYP).

4/8/2019 6:11:59 PM

IDENTIFICATION STAMP
DIV. OF THE STATE ARCHITECT
APP. 03-119458 INC:
REVIEWED FOR
SS ☑ FLS ☑ ACS ☑
DATE:05/23/2019

DIVISION OF THE STATE ARCHITECT
355 South Grand Avenue, Suite 2100
Los Angeles, CA 90012
ph: (213) 897-3995 fx:(213) 897-3159

agency

tBP
architecture
planning
interiors

tBP/Architecture
4611 Teller Avenue
Newport Beach, CA 92660
ph: 949.673.0300 fx: 949.732.3895

architect

CAPITAL
ENGINEERING CONSULTANTS, INC.
LONG BEACH, CALIFORNIA
CM - RH/SL/TS PM. - DESIGN TEAM
171221.00 PROJECT NO.

REGISTERED PROFESSIONAL ENGINEER
ROBERT KORNEY V. M 34011 EXPIRES 3/31/20
MECHANICAL
STATE OF CALIFORNIA

DATE SIGNED: 04/05/19

consultant

COMPTON COLLEGE
INSTRUCTIONAL BUILDING No.2
COMPTON COMMUNITY COLLEGE DISTRICT
1111 E. ARTESIA BLVD. COMPTON, CA.

owner

tBP project number: 20998.00
file name:
drawn by: checked by:
date: 11 / 20 / 2018

rev:	date:	description:

THIS DRAWING AND THE DESIGNS, DEPICTIONS, IDEAS AND OTHER INFORMATION CONTAINED HEREIN CONSTITUTE UNPUBLISHED WORK BY tBP/ARCHITECTURE AND SHALL REMAIN PROPERTY OF tBP/ARCHITECTURE IN PERPETUITY. NO PART THEREOF SHALL BE REPRODUCED, DISCLOSED, DISTRIBUTED, SOLD, PUBLISHED OR OTHERWISE USED IN ANY WAY WITHOUT THE ADVANCED EXPRESS WRITTEN CONSENT OF tBP/ARCHITECTURE.

drawing title:
RCP - FIRST FLOOR

drawing n
FP2-1
drawing of

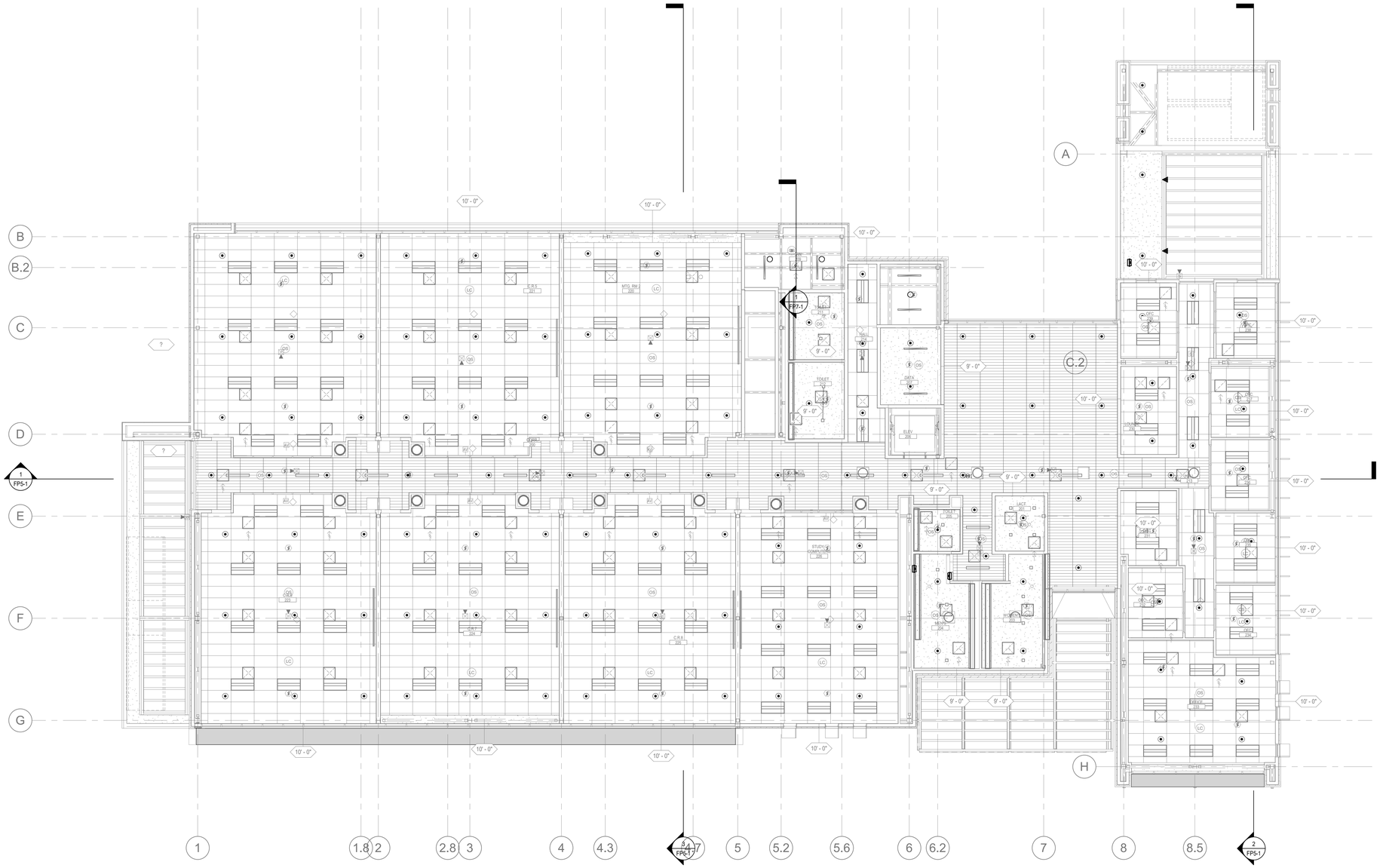

2ND FLOOR SPRINKLER RCP (1)

SCALE 1/8" = 1'-0"

SPRINKLER HEAD SCHEDULE AND LEGEND - 2ND FLOOR											
SYMBOL	COUNT	LOCATION	MANUFACTURER	SIN#	K-FACTOR	RESPONSE	DECRIPTION	TEMP.	FINISH	THREAD SIZE	COMMENTS
○	3	EXPOSED STRUCTURE	VIKING	VK300	5.6	Quick	SSU	155 °F	BRASS	1/2"	UPRIGHT
◄	2	ELEVATOR PIT/ SIDEWAL	VIKING	VK305	5.6	Quick	-	175 °F	BRASS	1/2"	SIDEWALL
⊙	122	GYP. BRD. ACC. TILE	VIKING	VK462	5.6	Quick	SSP	155 °F	-	1/2"	PENDENT

KEYNOTES:

SHEET NOTES:

1. PENDANT FIRE SPRINKLERS ARE TO BE LOCATED IN THE CENTERLINE OF THE CEILING TILE IN THE 2'-0" DIMENSION AND AT 12" INCREMENTS IN THE 4'-0" DIMENSION (TYP).

IDENTIFICATION STAMP
DIV. OF THE STATE ARCHITECT
APP. 03-119458 INC:
REVIEWED FOR
SS ☑ FLS ☑ ACS ☑
DATE:05/23/2019

DIVISION OF THE STATE ARCHITECT
355 South Grand Avenue, Suite 2100
Los Angeles, CA 90012
ph: (213) 897-3995 fx:(213) 897-3159

agency

tBP architecture planning interiors

tBP/Architecture
4611 Teller Avenue
Newport Beach, CA 92660
ph: 949.673.0300 fx: 949.732.3895

architect

CAPITAL ENGINEERING CONSULTANTS, INC.
LONG BEACH, CALIFORNIA
CM - RH/SL/TS 171221.00
PM - DESIGN TEAM PROJECT NO.

REGISTERED PROFESSIONAL ENGINEER
CHRISTOPHER V. MERCURY
M 34011
EXPIRES 9/30/20
MECHANICAL
STATE OF CALIFORNIA

DATE SIGNED: 04/05/19

consultant

COMPTON COLLEGE
INSTRUCTIONAL BUILDING No.2

COMPTON COMMUNITY COLLEGE DISTRICT
1111 E. ARTESIA BLVD. COMPTON, CA.

owner

tBP project number: 20998.00
file name:
drawn by: checked by:
date: 11 / 20 / 2018

rev:	date:	description:

THIS DRAWING AND THE DESIGNS, DEPICTIONS, IDEAS AND OTHER INFORMATION CONTAINED HEREIN CONSTITUTE UNPUBLISHED WORK OF tBP/ARCHITECTURE AND SHALL REMAIN PROPERTY OF tBP/ARCHITECTURE IN PERPETUITY. NO PART THEREOF SHALL BE REPRODUCED, DISCLOSED, DISTRIBUTED, SOLD, PUBLISHED OR OTHERWISE USED IN ANY WAY WITHOUT THE ADVANCED EXPRESS WRITTEN CONSENT OF tBP/ARCHITECTURE.

drawing title:
RCP - SECOND FLOOR

drawing n
FP2-2
drawing of

4/8/2019 6:12:03 PM

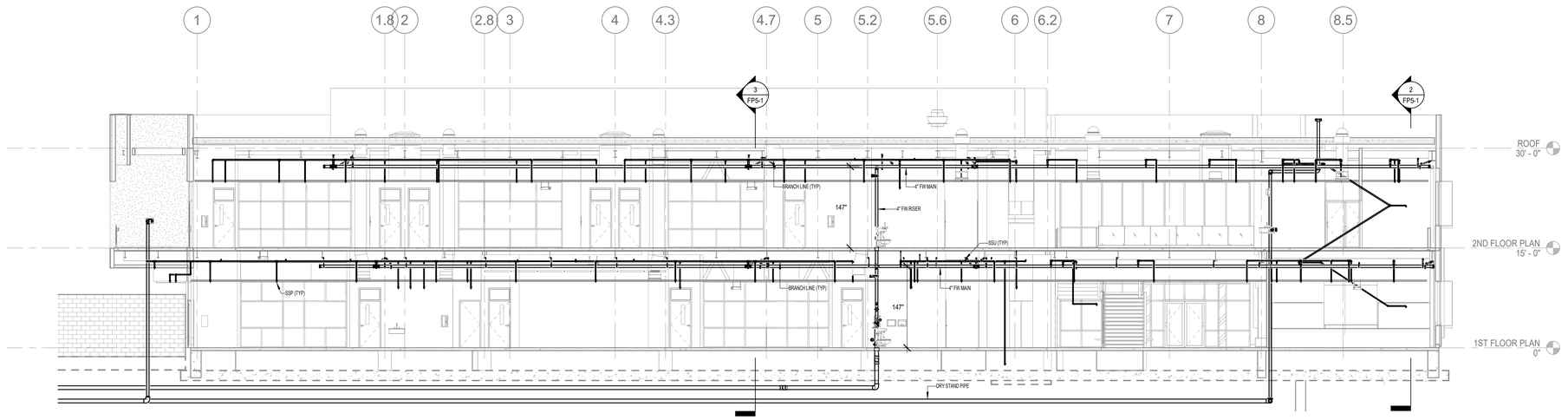

OVERALL E/W BUILDING SECTION 1

SCALE 1/8" = 1'-0"

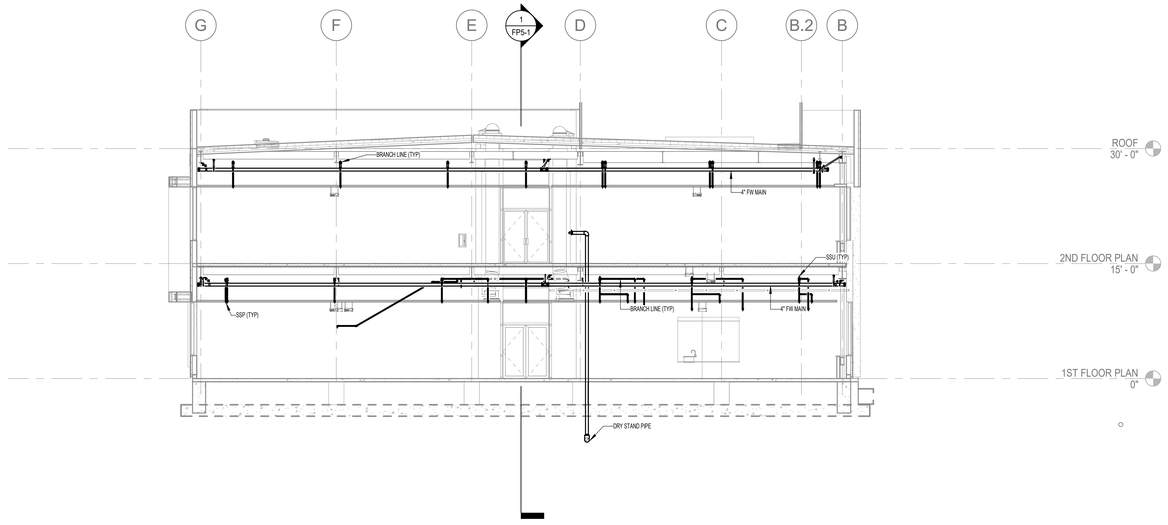

OVERALL N/S BUILDING SECTION-1 3

SCALE 1/8" = 1'-0"

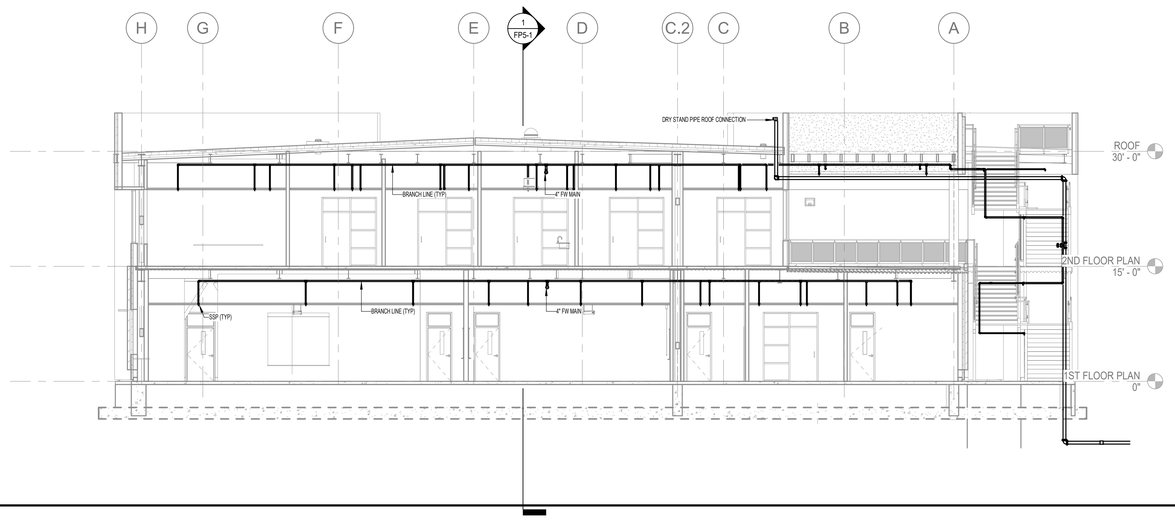

OVERALL N/S BUILDING SECTION-2 2

SCALE 1/8" = 1'-0"

4/8/2019 6:12:22 PM

IDENTIFICATION STAMP
DIV. OF THE STATE ARCHITECT
APP. 03-119458 INC:
REVIEWED FOR
SS ☑ FLS ☑ ACS ☑
DATE:05/23/2019

DIVISION OF THE STATE ARCHITECT
355 South Grand Avenue, Suite 2100
Los Angeles, CA 90012
ph: (213) 897-3995 fx:(213) 897-3159

agency

tBP
architecture
planning
interiors

tBP/Architecture
4611 Teller Avenue
Newport Beach, CA 92660
ph: 949.673.0300 fx: 949.732.3895

architect

CAPITAL
ENGINEERING CONSULTANTS, INC.
LONG BEACH, CALIFORNIA
CM - RH/SL/TS 171221.00
PM - DESIGN TEAM PROJECT NO.

REGISTERED PROFESSIONAL ENGINEER
CHRISTOPHER V. MERCURIO
M 34011
EXPIRES 03/30/20
MECHANICAL
STATE OF CALIFORNIA

DATE SIGNED: 04/05/19

consultant

COMPTON COLLEGE
INSTRUCTIONAL BUILDING No.2

COMPTON COMMUNITY COLLEGE DISTRICT
1111 E. ARTESIA BLVD. COMPTON, CA.

owner

tBP project number: 20998.00
file name:
drawn by: checked by:
date: 11 / 20 / 2018

rev:	date:	description:

THIS DRAWING AND THE DESIGNS, DEPICTIONS, IDEAS AND OTHER INFORMATION CONTAINED HEREIN CONSTITUTE UNPUBLISHED WORK OF tBP/ARCHITECTURE AND SHALL REMAIN PROPERTY OF tBP/ARCHITECTURE IN PERPETUITY. NO PART THEREOF SHALL BE REPRODUCED, DISCLOSED, DISTRIBUTED, SOLD, PUBLISHED OR OTHERWISE USED IN ANY WAY WITHOUT THE ADVANCED EXPRESS WRITTEN CONSENT OF tBP/ARCHITECTURE.

drawing title:
BUILDING SECTIONS

drawing n
FP5-1
drawing of

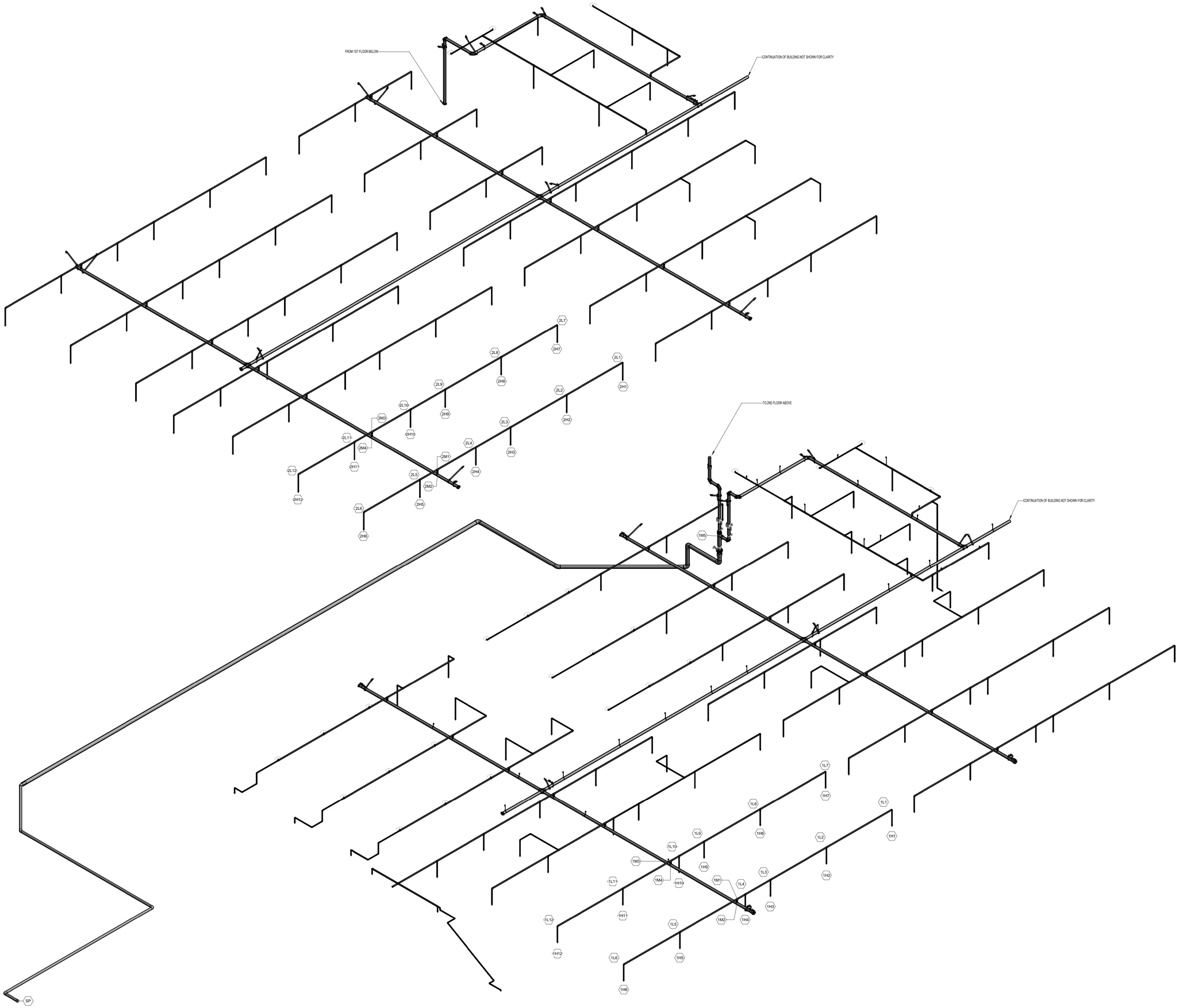

4/8/2019 6:12:28 PM

IDENTIFICATION STAMP
DIV. OF THE STATE ARCHITECT
APP. 03-119458 INC:
REVIEWED FOR
SS ☑ FLS ☑ ACS ☑
DATE:05/23/2019

DIVISION OF THE STATE ARCHITECT
355 South Grand Avenue, Suite 2100
Los Angeles, CA 90012
ph: (213) 897-3995 fx:(213) 897-3159

agency

tBP
architecture
planning
interiors

tBP/Architecture
4611 Teller Avenue
Newport Beach, CA 92660
ph: 949.673.0300 fx: 949.732.3895

architect

CAPITAL
ENGINEERING CONSULTANTS, INC.
LONG BEACH, CALIFORNIA
CM - RH/SL/TS 171221.00
PM - DESIGN TEAM PROJECT NO.

REGISTERED PROFESSIONAL ENGINEER
CHRISTOPHER V. MERCURIO
M 34011
EXPIRES 03/30/20
MECHANICAL
STATE OF CALIFORNIA

DATE SIGNED: 04/05/19

consultant

COMPTON COLLEGE
INSTRUCTIONAL BUILDING No.2

COMPTON COMMUNITY COLLEGE DISTRICT
1111 E. ARTESIA BLVD. COMPTON, CA.

owner

tBP project number: 20998.00
file name:
drawn by: checked by:
date: 11 / 20 / 2018

rev:	date:	description:

THIS DRAWING AND THE DESIGNS, DEPICTIONS, IDEAS AND OTHER INFORMATION CONTAINED HEREIN CONSTITUTE UNPUBLISHED WORK OF tBP/ARCHITECTURE AND SHALL REMAIN PROPERTY OF tBP/ARCHITECTURE IN PERPETUITY. NO PART THEREOF SHALL BE REPRODUCED, DISCLOSED, DISTRIBUTED, SOLD, PUBLISHED OR OTHERWISE USED IN ANY WAY WITHOUT THE ADVANCED EXPRESS WRITTEN CONSENT OF tBP/ARCHITECTURE.

drawing title:
ISOMETRIC VIEWS

drawing n
FP6-1
drawing of

AUTOMATIC FIRE SPRINKLER SYSTEM
SEISMIC LOADING CALCULATION - NFPA 13 2016

SWAY BRACE ASSEMBLIES

BRACE INFORMATION		SEISMIC BRACE ATTACHMENT		
LENGHT OF BRACE:	7'-0"	STRUCTURAL ATTACHMENT FITTING:		
		MAKE: TOLCO FIG. 800		
DIAMETER OF BRACE:	1"	LISTED LOAD RATING:		2,015
		ADJUSTED PER TABLE 9.3.5.2.3 (45-59)		1,425
TYPE OF BRACE:	SCH. 40 PIPE			
		PIPE ATTACHMENT FITTING:		
ANGLE OF BRACE:	45° TO 59°	MAKE: TOLCO FIG. 1001		
		LISTED LOAD RATING:		2,015
LEAST RADIUS OF GYRATION:	0.42	ADJUSTED PER TABLE 9.3.5.2.3 (45-59)		1,425
L/R VALUE:	200	MAKE: TOLCO FIG. 910		
		LISTED LOAD RATING:		1,600
MAX. HORIZONTAL LOAD:	1,310	ADJUSTED PER TABLE 9.3.5.2.3 (45-59)		1,131
		MAKE: TOLCO FIG.4L		
		LISTED LOAD RATING:		2,015
		ADJUSTED PER TABLE 9.3.5.2.3 (45-59)		1,425

SEISMIC BRACE FASTENER	SEISMIC BRACE ASSEMBLY DETAIL			
ORIENTATION OF CONNECTING SURFACE : B (NFPA 13 2013 FIG 9.3.5.9.1)				
FASTENER :	SEE DETAIL 2 & 3 THIS SHEET.			
TYPE: ATTACHMENT TO STEEL BEAM - TOLCO FIG. 800				
MAX LOAD : 2,015 LBS.				
ADJUSTED PER TABLE 9.3.5.10.3: 1,425	BRACE IDENTIFICATION NO. (TO BE USED ON PLANS) :			
	X	LATERAL BRACE	☐	LONGITUDINAL BRACE

SPRINKLER SYSTEM LOAD CALCULATION Fpw = Cp X Wp

DIA	TYPE	LENGTH	Ss = 1.67 - Cp = 0.79		TOTAL WEIGHT	
1"	SCH 40	22.00'	X 2.05	LBS / FT	45.1	LBS
1 1/4"	SCH 40	0.00'	X 2.93	LBS / FT	0.00	LBS
1 1/2"	SCH 40	88.00'	X 3.61	LBS / FT	317.68	LBS
2"	SCH 40	1.00'	X 5.13	LBS / FT	5.13	LBS
3"	SCH 40	0.00'	X 10.82	LBS / FT	0.00	LBS
4"	SCH 10	30.00'	X 11.78	LBS / FT	353.8	LBS
6"	SCH 10	0.00'	X 23.03	LBS / FT	0.00	LBS
		TOTAL WEIGHT OF WATER FILLED PIPE			721.71	LBS
		Wp (incl 15%)			829.97	LBS
		TOTAL (Fpw)			655.67	LBS
		X	LONGITUDINAL BRACE			
DIA	TYPE	LENGTH	Ss = 1.67 - Cp = 0.79		TOTAL WEIGHT	
1"	SCH 40	0.00'	X 2.05	LBS / FT	0.00	LBS
1 1/4"	SCH 40	0.00'	X 2.93	LBS / FT	0.00	LBS
1 1/2"	SCH 40	0.00'	X 3.61	LBS / FT	0.00	LBS
2"	SCH 40	0.00'	X 5.13	LBS / FT	0.00	LBS
3"	SCH 40	0.00'	X 10.82	LBS / FT	0.00	LBS
4"	SCH 10	60.00'	X 11.78	LBS / FT	706.8	LBS
6"	SCH 10	0.00'	X 23.03	LBS / FT	0.00	LBS
		TOTAL WEIGHT OF WATER FILLED PIPE			706.8	LBS
		Wp (incl 15%)			812.82	LBS
		TOTAL (Fpw)			642.13	LBS

REFER TO SHEET FP1-1 FOR ZONE OF INFLUENCE.

SEISMIC BRACE CALC, LEGEND & SCHEDULE (9)
SCALE

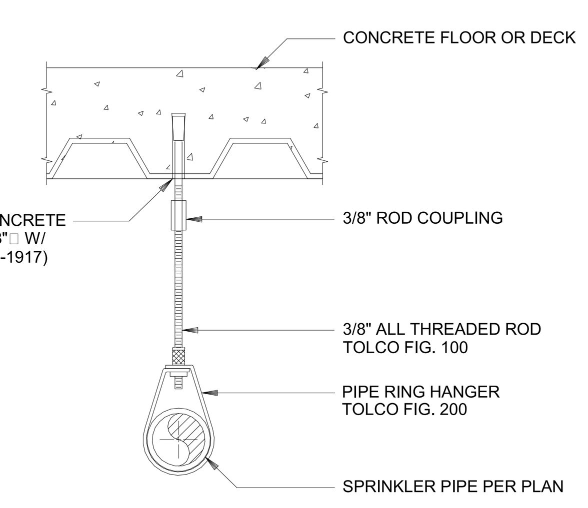

"KWIK-BOLT TZ" ANCHOR, ROD, COUPLING AND RING

PIPE SIZE	MAXIMUM SPACING
1" & 1 1/4"	12'-0"
1 1/2" - 3"	15'-0"
4" & LARGER	10'-0"

PIPE HANGER TO CONCRETE

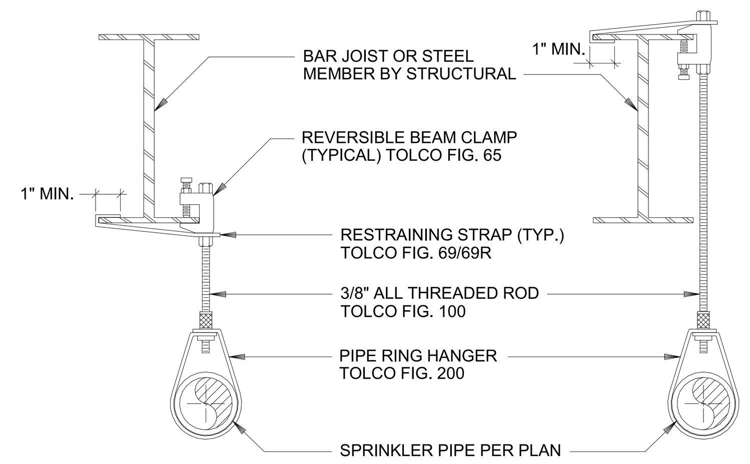

BEAM CLAMP, ROD, COUPLING AND RING

PIPE SIZE	MAXIMUM SPACING
1" & 1 1/4"	12'-0"
1 1/2" - 3"	15'-0"
4" & LARGER	10'-0"

PIPE HANGER TO STEEL

NOTE:

A. FOR STEEL PIPE, THE UNSUPPORTED HORIZONTAL LENGTH BETWEEN THE END SPRINKLER AND THE LAST HANGER ON THE LINE SHALL BE AS FOLLOWS;

PIPE SIZE	HORIZONTAL LENGTH
1"	NOT GREATER THAN 36"
1 1/4"	NOT GREATER THAN 48"
1 1/2" & LARGER	NOT GREATER THAN 60"

(NFPA 13, SEC. 9.2.3.4.1, 2016 EDITION)

SYMBOL

PIPE HANGER DETAIL (7)
SCALE

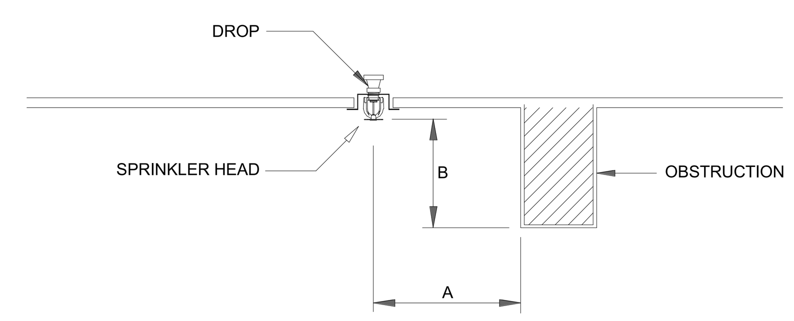

DISTANCE FROM SPRINKLERS TO SIDE OF OBSTRUCTION (A)	MAX. ALLOWANCE DISTANCE OF DEFLECTOR ABOVE BOTTOM OF OBSTRUCTION (IN.) (B)
LESS THAN 1 FT.	0
1'-0" TO LESS THAN 1'-6"	2-1/2
1'-6" TO LESS THAN 2'-0"	3-1/2
2'-0" TO LESS THAN 2'-6"	5-1/2
2'-6" TO LESS THAN 3'-0"	7-1/2
3'-0" TO LESS THAN 3'-6"	9-1/2
3'-6" TO LESS THAN 4'-0"	12
4'-0" TO LESS THAN 4'-6"	14
4'-6" TO LESS THAN 5'-0"	16-1/2
5'-0" TO LESS THAN 5'-6"	18
5'-6" TO LESS THAN 6'-0"	20
6'-0" TO LESS THAN 6'-6"	24
6'-6" TO LESS THAN 7'-0"	30
7'-0" TO LESS THAN 7'-6"	35

OBSTRUCTION TABLE (4)
SCALE

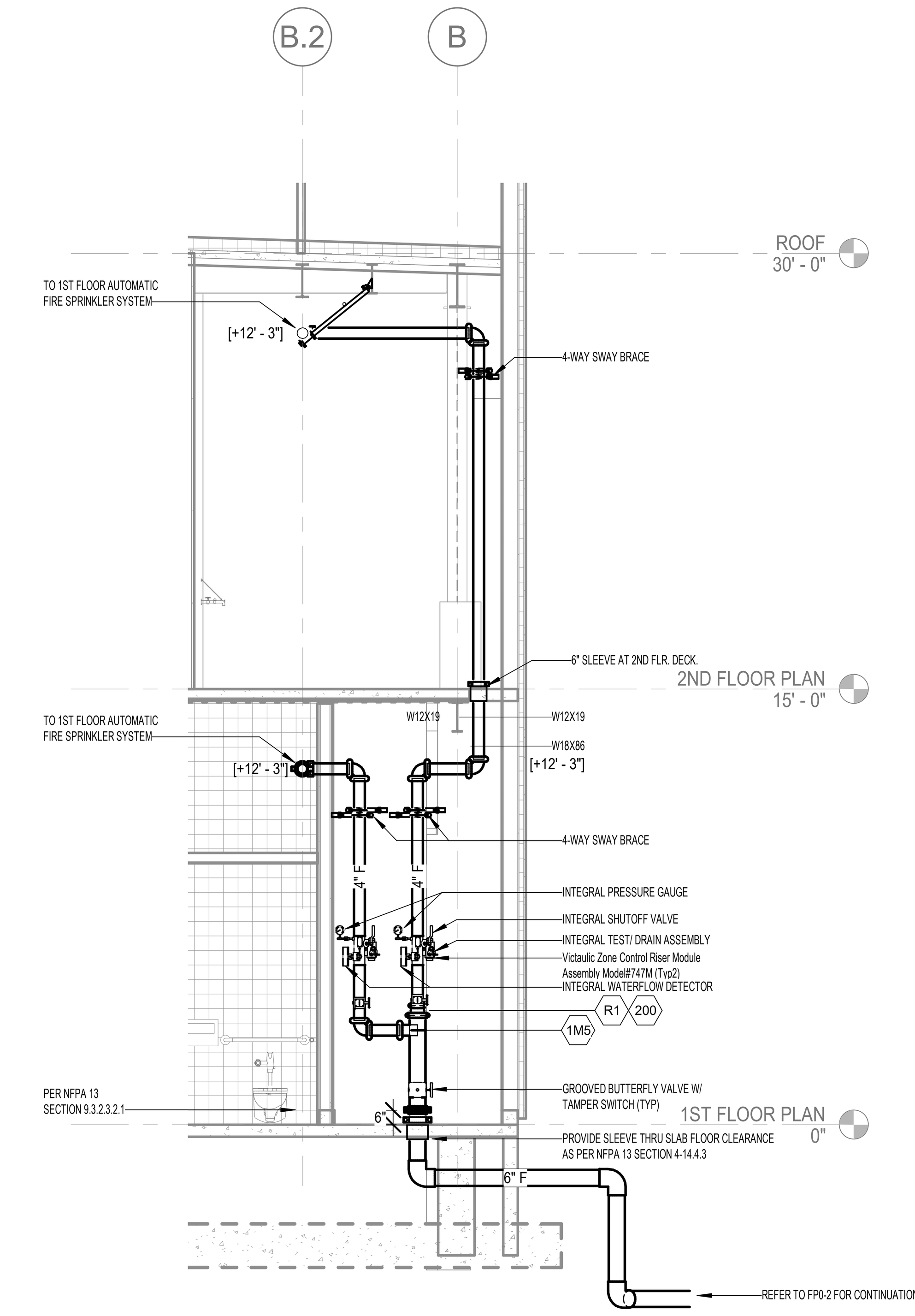

SPRINKLER RISER SECTION (1)
SCALE 1/4" = 1'-0"

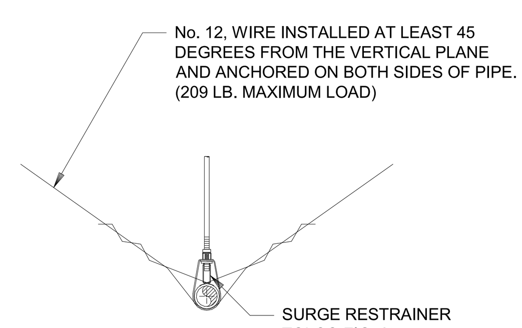

END OF BRANCH LINE SEISMIC RESTRAINT
(NFPA 13, SECTION 9.3.6.1)

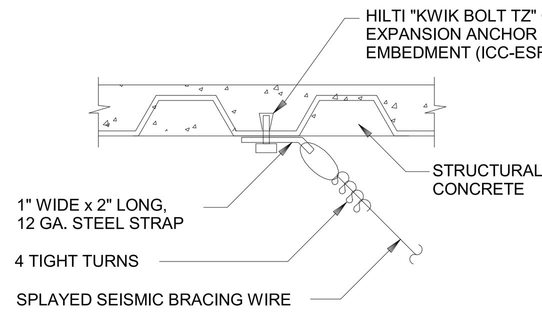

PER NFPA 13, FIG. A.9.3.6.1(a)

NOTES:
1. THE END SPRINKLER ON A BRANCH LINE SHALL BE RESTRAINED AGAINST EXCESSIVE VERTICAL OR LATERAL MOVEMENT (NFPA 13, 9.3.6.3, 2016 EDITION.)
2. THE ABOVE DETAIL SHALL BE USED FOR LATERAL RESTRAINT AT INTERVALS NOT EXCEEDING THOSE SPECIFIED IN THE TABLE BELOW.

PIPE SIZE	MAXIMUM SPACING
1"	26' INTERVALS
1 1/4"	27' INTERVALS
1 1/2"	29' INTERVALS
2"	31' INTERVALS

3. MAX.DISTANCE BETWEEN THE LAST BRACE AND END OF THE PIPE SHALL NOT EXCEED 6'-0"

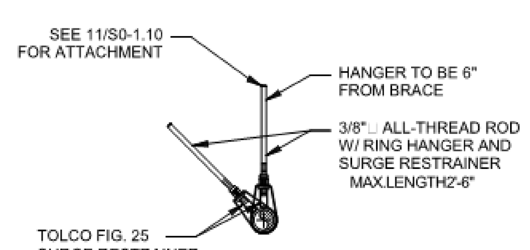

ALTERNATE END OF BRANCH LINE SEISMIC RESTRAINT
(NFPA 13 SECTION 9.3.6.1)

NOTE:
MAX 3/8" HANGER ROD LENGTH 2'-6" L/R 400
MAX 1/2" HANGER ROD LENGTH 3'-0" L/R 400

END OF LINE RESTRAINT (8)
SCALE

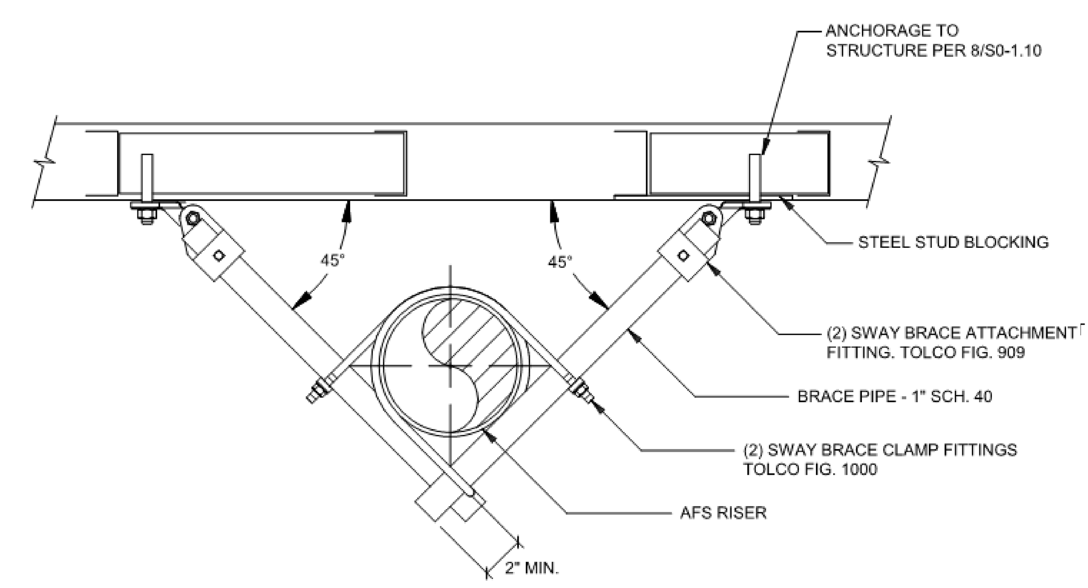

NOTE:
A. UTILIZE TWO LATERAL SEISMIC BRACES FOR 4-WAY RISER BRACE

SYMBOL

4-WAY SWAY BRACING (5)
SCALE

SYSTEM #W-L-1001 FOR UNISULATED PIPE. SYSTEM #W-L-5001 FOR INSULATED PIPE.

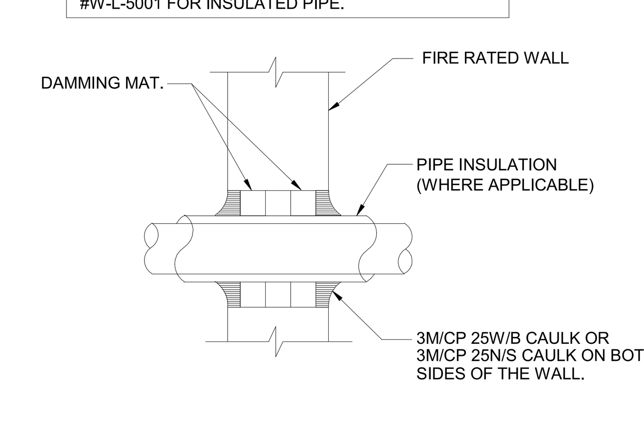

DETAIL NOTES

1. THE MAXIMUM ANNULAR SPACE TO BE FILLED IS 2". THE MINIMUM ANNULAR SPACE IS 3/4". THE MAXIMUM PIPE SIZE IS A NOMINAL 4".
2. FOR SOLID CONCRETE WALLS, 3M/CP 25 CAULK MAY BE CENTERED IN THE WALL WITH DAMMING MATERIAL ON BOTH SIDES OF THE CAULK.
3. USE CP 25S/L(SELF LEVELING) CAULK ON HORIZONTAL SURFACES WHEN SEALING OPENING FROM ABOVE THE PENETRATION. USE CP25N (NO SAG) CAULK ON VERTICAL SURFACES AND ON HORIZONTAL SURFACES WHEN SEALING OPENINGS FROM BELOW. USE CP 25WB CAULK ON EITHER APPLICATION.
4. SHRINKAGE OF CP 25 CAULKS IS ACCEPTABLE AFTER INITIAL WET DEPTH INSTALLATION.
5. THE DEPTH OF THE CP 25 CAULKS DEPENDS ON THE INSULATION THICKNESS.

CAULK DEPTH (MIN.)	INSULATION
1"	1"THICK
2"	2"-3" THICK

6. IF WATER PIPE IS INSULATED, CAULK PIPE OUTSIDE OF PIPE INSULATION.

FIRE RATED PIPE PENETRATION (6)
SCALE

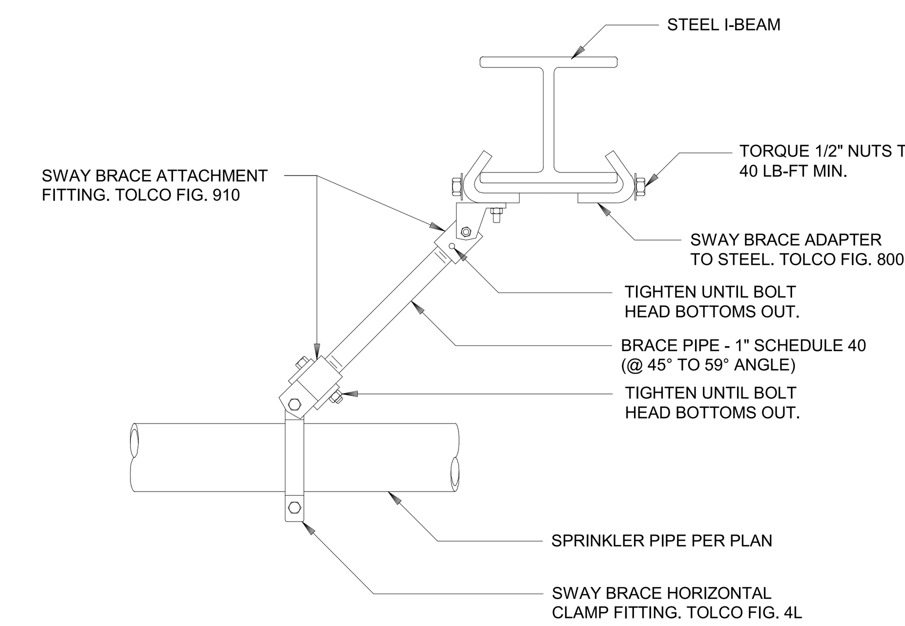

SYMBOL

LONGITUDINAL SEISMIC BRACE TO STEEL (2)
SCALE

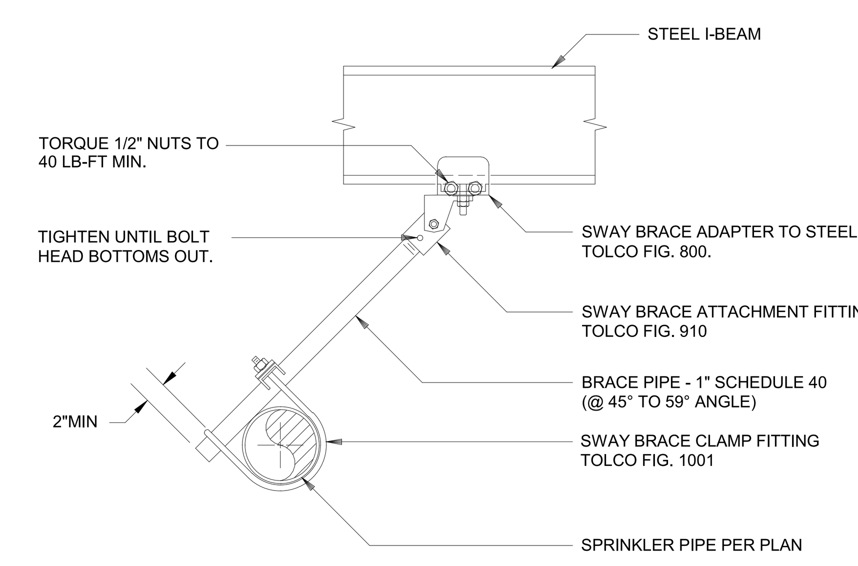

SYMBOL

LATERAL SEISMIC BRACE TO STEEL (3)
SCALE

IDENTIFICATION STAMP
DIV. OF THE STATE ARCHITECT
APP. 03-119458 INC:
REVIEWED FOR
SS ☑ FLS ☑ ACS ☑
DATE:05/23/2019

DIVISION OF THE STATE ARCHITECT
355 South Grand Avenue, Suite 2100
Los Angeles, CA 90012
ph: (213) 897-3995 fx:(213) 897-3159
agency

tBP architecture planning interiors

tBP/Architecture
4611 Teller Avenue
Newport Beach, CA 92660
ph: 949.673.0300 fx: 949.732.3895
architect

CAPITAL ENGINEERING CONSULTANTS, INC.
LONG BEACH, CALIFORNIA
CM - RH/SL/TS — PM - DESIGN TEAM
171221.00 — PROJECT NO.

REGISTERED PROFESSIONAL ENGINEER CHRISTOPHER V. MERCURIO M 34011 EXPIRES 3/30/20 MECHANICAL STATE OF CALIFORNIA

DATE SIGNED: 04/05/19
consultant

COMPTON COLLEGE
INSTRUCTIONAL BUILDING No.2
COMPTON COMMUNITY COLLEGE DISTRICT
1111 E. ARTESIA BLVD. COMPTON, CA.
owner

tBP project number: 20998.00
file name:
drawn by: checked by:
date: 11 / 20 / 2018
rev: date: description:

THIS DRAWING AND THE DESIGNS, DEPICTIONS, IDEAS AND OTHER INFORMATION CONTAINED HEREIN CONSTITUTE UNPUBLISHED WORK OF tBP/ARCHITECTURE AND SHALL REMAIN PROPERTY OF tBP/ARCHITECTURE IN PERPETUITY. NO PART THEREOF SHALL BE REPRODUCED, DISCLOSED, DISTRIBUTED, SOLD, PUBLISHED OR OTHERWISE USED IN ANY WAY WITHOUT THE ADVANCED EXPRESS WRITTEN CONSENT OF tBP/ARCHITECTURE.

drawing title:
DETAILS

drawing n
FP7-1
drawing of

4/8/2019 6:12:29 PM

GENERAL NOTES

1. THESE DRAWINGS AND SPECIFICATIONS ARE INTENDED TO COVER A COMPLETE INSTALLATION OF SYSTEMS. THE OMISSION OR EXPRESSED REFERENCE TO ANY ITEM OF LABOR OR MATERIALS REQUIRED FOR THE PROPER EXECUTION OF THE WORK IN ACCORDANCE WITH PRESENT PRACTICE OF THE TRADE SHALL NOT RELIEVE THE CONTRACTOR FROM PROVIDING SUCH ADDITIONAL LABOR AND MATERIALS.

2. THESE PLANS, SPECIFICATIONS, AND ALL MATERIALS SHALL BE IN FULL ACCORDANCE WITH ALL LEGAL AND INDUSTRY REQUIREMENTS, AND STANDARDS INCLUDING WITHOUT LIMITATION TO THE FOLLOWING:

   a. CALIFORNIA CODE OF REGULATIONS TITLE 24, PARTS 1 AND 2 (CALIFORNIA BUILDING CODE), 2016 EDITION.

   b. CALIFORNIA CODE OF REGULATIONS TITLE 24, PART 3 (CALIFORNIA ELECTRICAL CODE), 2016 EDITION.

   c. CALIFORNIA CODE OF REGULATIONS TITLE 24, PART 6 (CALIFORNIA ENERGY CODE), 2016 EDITION.

   d. CALIFORNIA CODE OF REGULATIONS TITLE 24, PART 9 (CALIFORNIA FIRE CODE), 2016 EDITION.

   e. OTHER REGULATING AGENCIES WHICH MAY HAVE AUTHORITY OVER ANY PORTION OF THE WORK, INCLUDING THE STATE OF CALIFORNIA DIVISION OF INDUSTRIAL SAFETY, AND THOSE CODES AND STANDARDS LISTED IN THESE NOTES AND SPECIFICATIONS.

   f. THE ELECTRICAL SYSTEMS FUNCTIONALITY STANDARDS SET FORTH IN TITLE 7 OF THE CALIFORNIA CIVIL CODE (THE "RIGHT TO REPAIR ACT").

   g. THE MANUFACTURER'S REQUIREMENTS OR RECOMMEND-ATIONS FOR ANY INCORPORATED PRODUCTS.

   h. THE MOST CURRENT APPROVED ISSUES OF ANY NOTED SPECIFICATIONS, CODES AND STANDARDS, INCLUDING SUPPLEMENTS, UNLESS NOTED OTHERWISE.

3. THE PLANS REPRESENT ONLY THE FINISHED ELECTRICAL, FIRE ALARM, AND LOW VOLTAGE SYSTEMS, AND THEY ARE NOT INTENDED TO INDICATE OR REQUIRE ANY CONSTRUCTION MEANS, METHODS, TECHNIQUES, SEQUENCES OR PROCEDURES.

4. IN USING THE PLANS FOR BIDDING OR CONSTRUCTION PURPOSES, THE CONTRACTOR IS REQUIRED TO REVIEW ALL OF THE PROJECT'S CONSTRUCTION DOCUMENTS AS A WHOLE IN ORDER TO IDENTIFY ALL REQUIREMENTS THAT DIRECTLY OR INDIRECTLY AFFECT ITS PORTION OF THE ELECTRICAL WORK, EVEN REQUIREMENTS LOCATED IN SECTIONS DESIGNATED AS APPLICABLE TO OTHER TRADES. IN CASE OF CONFLICTS, THE CONTRACTOR SHALL EITHER OBTAIN DIRECTION FROM AN APPROPRIATE OWNER REPRESENTATIVE OR OTHERWISE APPLY THE MORE STRINGENT REQUIREMENT.

5. IN INTERPRETATING THE PLANS, THE FOLLOWING GENERAL RULES APPLY:

   a. WRITTEN DIMENSIONS SHALL TAKE PRECEDENCE OVER SCALED DRAWINGS.

   b. SCALED DIMENSIONS AND GRAPHICALLY SHOWN LOCATIONS ARE TO BE CONSIDERED ONLY APPROXIMATE. FIELD VERIFY DIMENSIONS PRIOR TO BID.

6. IN IMPLEMENTING THE PLANS, THE FOLLOWING GENERAL RULES APPLY:

   a. BECAUSE THE PLANS ARE INTENDED TO SET FORTH THE REQUIREMENTS FOR CONSTRUCTION IN ONLY AN INDUSTRY-STANDARD LEVEL OF QUALITY AND DETAIL, AND THEREFORE ARE INTENDED TO BE SUPPLEMENTED BY APPROPRIATE REQUESTS FOR CLARIFICATION AND INFORMATION, ERRORS AND OMISSIONS ARE TO BE EXPECTED AND ANTICIPATED; AND THE CONT-RACTOR IS REQUIRED TO CAREFULLY REVIEW THE PLANS FOR ERRORS AND OMISSIONS AND TO BRING THESE ERRORS AND OMISSIONS TO THE ATTENTION OF AN APPROPRIATE OWNER REPRESENTATIVE IN A TIMELY MANNER AN ASSUMES THE RISK OF THE CONSEQUENCES OF FAILING TO DO SO BEFORE BIDDING OR OTHERWISE PROCEEDING.

   b. THE CONTRACTOR SHALL REVIEW AND VERIFY ALL DIMENSIONS PRIOR TO STARTING CONSTRUCTION, AND NOTIFY THE ARCHITECT IMMEDIATELY OF ANY DISCRE-PANCIES OR INCONSISTENCIES..

7. SUBMITTALS WILL BE REVIEWED BY THE ELECTRICAL ENGINEER, IF AT ALL, ONLY PURSUANT TO THE INDUSTRY-STANDARD PROTOCOL SET FORTH IN A1A DOCUMENT A201, AND IN NO EVENT WILL THE SUBMITTAL REVIEW PROCESS RELIEVE OR LESSEN THE SUBMITTING CONTRACTOR'S RESPONSIBILITY FOR AN INAPPROPRIATE SUBMITTAL.

8. IN NO EVENT WILL ANY SITE VISITS BY THE ELECTRICAL ENGINEER CONCERN CONSTRUCTION MEANS AND METHODS OR CONSTRUCTION SAFETY, AND ALL SUCH MATTERS SHALL REMAIN THE SOLE RESPONSIBILITY OF THE CONTRACTOR.

9. COPIES OF THE PLANS PROVIDED IN ANY ELECTRONIC FORM ARE SUBJECT TO THE SAME PROVISIONS AS THE OTHER INSTRUMENTS OF SERVICE PREPARED BY OR ON BEHALF OF ELECTRICAL ENGINEER FOR THE PROJECT, INCLUDING WITHOUT LIMITATION THE ENGINEER'S COMMON LAW, STATUTORY OR OTHER RESERVED RIGHTS, INCLUDING COPYRIGHTS. A RECIPIENT IS GRANTED AT MOST A TRANSFERABLE NONEXCLUSIVE LICENSE TO REUSE THE PLANS SOLELY FOR PROJECT PURPOSES; AND NO RECIPIENT IS AUTHORIZED TO USE OR TO ALLOW THE USE OF ALL OR ANY PORTION OF THESE PLANS FOR ANY OTHER PURPOSE, AND ANY USE FOR ANY OTHER PURPOSE WOULD CONSTITUTE ACTIONABLE PLAGIARISM. ELECTRICAL ENGINEER PROVIDES DOCUMENTS IN AN ELECTRONIC FORM ONLY IN ITS STANDARD FORMATS AND CONVENTIONS AND WITH NO GUARANTEE OF COMPATIBILITY WITH ANY RECEIPIENT'S SOFTWARE OR HARDWARE, AND ANY USE WITH OR CONVERSION TO OTHER FORMATS OR CONVENTIONS, OR THE USE WITH ANY PARTICULAR SOFTWARE OR HARDWARE, IS AT THE RECIPIENT'S SOLE RISK.

10. REFER TO THE DRAWINGS AND SHOP DRAWINGS OF OTHER TRADES FOR ADDITIONAL DETAILS WHICH AFFECT THE PROPER INSTALLATION OF THIS WORK.

11. BEFORE SUBMITTING A BID, THE CONTRACTOR SHALL FAMILIARIZE HIMSELF WITH ALL FEATURES OF THE BUILDING, AND ALL BUILDING DRAWINGS WHICH MAY AFFECT THE EXECUTION OF THE WORK. NO EXTRA PAYMENT WILL BE ALLOWED FOR FAILURE TO OBTAIN THIS INFORMATION.

12. PROTECT ALL WORK, MATERIALS AND EQIPMENT FROM DAMAGE FROM ANY CAUSE WHATEVER AND PROVIDE ADEQUATE AND PROPER STORAGE FACILITIES DURING THE PROGRESS OF THE WORK. PROVIDE FOR THE SAFETY AND GOOD CONDITION OF ALL THE WORK UNTIL FINAL ACCEPTANCE OF THE WORK BY THE OWNER AND REPLACE ALL DAMAGED OR DEFECTIVE WORK, MATERIALS AND EQUIPMENT BEFORE REQUESTING FINAL ACCEPTANCE.

13. THE DRAWINGS INDICATE IN A DIAGRAMMATIC MANNER, THE DESIRED LOCATIONS OF ARRANGEMENT OF THE COMPONENTS OF ELECTRICAL WORK. DETERMINE EXACT CONDUIT ROUTING, CONDUIT BENDS, AUXILIARY JUNCTION BOXES, SUPPORTS, AND UNDEFINED CONSTRUCTION DETAILS AS A JOB CONDITION TO BE INSTALLED IN ACCORDANCE WITH THE APPLICABLE CODE REQUIREMENTS. PROPER JUDGEMENT MUST BE EXERCISED IN EXECUTING THE WORK SO AS TO SECURE THE BEST POSSIBLE INSTALLATION IN THE AVAILABLE SPACE, AND TO OVERCOME LOCAL DIFFICULTIES DUE TO SPACE LIMITATIONS OR INTERFERENCE OF CONDITIONS ENCOUNTERED.

14. IN THE EVENT CHANGES IN THE INDICATED LOCATIONS OR ARRANGEMENTS ARE NECESSARY, DUE TO DEVELOPED CONDITIONS IN THE BUILDING CONSTRUCTION OR REARRANGEMENTOF EQUIPMENT, SUCH CHANGES SHALL BE MADE WITHOUT COST PROVIDING THE CHANGE IS ORDERED BEFORE THE CONDUIT RUNS, ETC., AND WORK DIRECTLY CONNECTED TO SAME IS INSTALLED AND NO EXTRA MATERIALS ARE REQUIRED.

15. THE DRAWINGS INDICATE APPROXIMATE LOCATIONS OF EXISTING CONDUITS. THE EXACT ROUTING SHALL BE VERIFIED IN FIELD AND LENGTH OF CONDUCTORS SHALL BE ADJUSTED TO THE LENGTH REQUIRED.

16. PERFORM CUTTING AND PATCHING ON THE CONSTRUCTION WORK WHICH MAY BE REQUIRED FOR THE PROPER INSTALLATION OF THE ELECTRICAL WORK. PATCHING SHALL BE OF THE SAME MATERIAL, WORKMANSHIP AND FINISH AS SPECIFIED AND ACCURATELY MATCH SURROUNDING WORK TO SATISFACTION OF THE ARCHITECT.

17. PROVIDE ALL EQUIPMENT WITH ENCLOSURES LISTED OR LABELED FOR USE AND LOCATION WHERE SUCH EQUIPMENT IS INSTALLED.

18. PROVIDE UL LISTED FIRE STOP FOR ALL PENETRATIONS THROUGH FIRE RATED FLOORS, WALLS AND CEILINGS TO MAINTAIN ALL FIRE RATINGS. THE FIRE STOP MATERIALS SHALL BE RE-ENTERABLE AND REUSABLE.

19. PROVIDE COORDINATED SHOP DRAWINGS. INDICATING DIMENSIONED LOCATIONS AND SIZES OF ALL CORE DRILLS FOR REVIEW AND APPROVAL. ALL CORE DRILL LOCATIONS SHALL BE VERIFIED AND APPROVED WITH OWNERS REPRESENTATIVE, STRUCTURAL AND ARCHITECT PRIOR TO CORE DRILL. UTILIZE X-RAY EQUIPMENT TO LOCATE AND VERIFY EXISTING STRUCTUREAL ELEMENTS WITHIN SLAB.

20. GROUNDING SHALL BE EXECUTED IN ACCORDANCE WITH ALL APPLICABLE CODES AND REGULATIONS, BOTH OF THE STATE OF CALIFORNIA AND LOCAL AUTHORITIES HAVING JURISDICTION.

21. PROVIDE GROUND WIRE IN EACH CONDUIT CONTAINING CIRCUITS FEEDING RECEPTACLES. THE CONDUIT SHALL NOT BE PERMITTED TO SERVE AS THE ONLY ELECTRICAL GROUND RETURN PATH.

22. WHERE CIRCUIT CHANGES OR ADDITIONS OCCUR IN PANELBOARDS UPDATE PANEL DIRECTORY CARDS WITH NEW TYPEWRITTEN CARDS INDICATING DESCRIPTION OF ALL CIRCUITS.

23. PROVIDE HANDLE TIES AT CIRCUIT BREAKERS TO SIMULTAINEOUSLY DISCONNECT ALL UNGROUNDED CONDUCTORS OF MULTI-WIRE BRANCH CIRCUITS WITH A SHARED NEUTRAL.

24. UNLESS NOTED OTHERWISE ALL 120 VOLT HOMERUNS OVER 100 FEET SHALL BE #10 AWG MINIMUM. ADJUST CONDUIT SIZE ACCORDINGLY.

25. UNLESS NOTED OTHERWISE ALL 277 VOLT HOMERUNS OVER 200 FEET SHALL BE #10 AWG MINIMUM, OVER 300 FEET SHALL BE #8 AWG MINIMUM. ADJUST CONDUIT SIZE ACCORDINGLY.

26. CONDUIT FOR TELEPHONE/DATA CABLING SHALL COMPLY WITH THE FOLLOWING ADDITIONAL REQUIREMENTS:

   a. INSIDE BEND RADIUS SHALL BE AT LEAST 10 TIMES ITS INTERNAL DIAMETER.

   b. PROVIDE PULL BOXES WHENEVER CONDUIT LENGTH EXCEEDS 150 FEET AND WHEN COMBINED BENDS ARE GREATER THAN 180 DEGREES.

   c. ALL CONDUIT SHALL BE PROVIDED WITH INSULATED BUSHINGS.

   d. MAINTAIN A MINIMUM CLEARANCE OF 4 FEET FROM MOTORS AND TRANSFORMERS.

   e. MAINTAIN A MINIMUM CLEARANCE OF 12 INCHES FROM POWER CIRCUITS.

27. COORDINATE MOUNTING HEIGHTS OF RECEPTACLES, SWITCHES, A/V DEVICES, SECURITY DEVICES, ETC. MOUNTED ON COMMON WALLS SO THAT ALL OUTLETS ARE MOUNTED TO ALIGN HORIZONTALLY.

28. NOTIFY THE ARCHITECT IN WRITING WHEN INSTALLATION IS COMPLETE AND THAT A FINAL INSPECTION OF THIS WORK CAN BE PERFORMED. IN THE EVENT DEFECTS OR DEFICIENCIES ARE FOUND DURING THIS FINAL INSPECTION, THEY SHALL BE CORRECTED TO THE SATISFACTION OF THE ARCHITECT BEFORE FINAL ACCEPTANCE CAN BE ISSUED.

4/8/2019 4:14:11 PM

SYMBOL LIST

(ALL SYMBOL NOT NECESSARILY USED ON THESE DRAWINGS)
ALL SYMBOL DESCRICPTION ARE SUBJECT TO MODIFICATION AS NOTED ON THE DRAWINGS . VERIFY EXACT LOCATION AND HEIGHT OF OUTLETS WITH ARCHITECTURAL INTERIOR ELEVATIONS PRIOOR TO ROUGH-IN.

- AM-FM ANTENNA (VERIFY MOUNTING LOCATION)
- OUTLET BOX FOR CLOSED CIRCUIT CAMERA. PROVIDE 1" C. TO BUILDING'S ACCESSIBLE CEILING. (VERIFY MOUNTING LOCATION)
- MCA-11 — HOME RUN TO MCA-11, INDICATES MOTOR CONTROL CENTER "MCA" CIRCUIT NO. 11. SEE RESPECTIVE SCHEDULE FOR WIRE AND CONDUIT.
- PUSH BUTTON STATION WITH "STOP-START" PUSH BUTTONS AND RED INDICATING PILOT LIGHT ON FLUSH WALL MOUNTED OUTLET BOX, +45".
- CONDUIT, INSTALLED CONCEALED IN WALL OR IN CEILING SPACE.
- CONDUIT, INSTALLED CONCEALED IN OR UNDER FLOOR OR BELOW GRADE, 3/4" CONDUIT MINIMUM.
- CONDUIT, INSTALLED EXPOSED.
- B-5,7,9 — HOMERUN TO PANEL "B" FOR CIRCUITS 5, 7, 9 WITH COMMON NEUTRAL.
- UNDERGROUND CONDUIT STUBOUT, STUB 5'-0" FROM BUILDING OR WALKWAY, CAP, MARK AND RECORD.
- MOTOR CONNECTION. PROVIDE FUSED SAFETY SWITCH (DISCONNECT), HORSE POWER RATED, WALL MOUNTED, +45" OR EQUIPMENT MOUNTED, +36". PROVIDE SWITCH AND FUSES SIZED PER EQUIPMENT MANUFACTURER REQUIREMENTS.
- P — JUNCTION BOX, FLUSH IN FLOOR. "P" INDICATES PEDESTAL TYPE ON FLUSH FLOOR MOUNTED OUTLET BOX.
- FIRE ALARM BELL
- AV — COMBINATION DATA/POWER/AUDIO VIDEO FLOOR BOX FLUSH WITH GRADE WITH MINIMUM TWO (2) DATA OUTLET, TWO (2) POWER OUTLET AND AUDIO VISUAL CONNECTORS. REFER TO TELECOM PLANS FOR MORE INFORMATION.
- AV PT — COMBINATION DATA/POWER/AUDIO VIDEO POKE THROUGH DEVICE WITH MINIMUM TWO (2) DATA OUTLET, TWO (2) POWER OUTLET AND AUDO VISUAL CONNECTORS. REFER TO TELECOM PLANS AND SPECIFICATIONS FOR MORE INFORMATION.
- (4) — COMBINATION DATA/POWER FLOOR BOX WITH FOUR (4) DATA OUTLETS AND TWO (2) DUPLEX RECEPTACLES. REFER TO TELECOM PLANS AND SPECIFICATIONS FOR MORE INFORMATION.
- (6) R — COMBINATION DATA/POWER FLOOR BOX WITH SIX (6) DATA OUTLETS AND THREE (3) DUPLEX RECEPTACLES. REFER TO TELECOM PLANS AND SPECIFICATIONS FOR MORE INFORMATION.
- (4) PT — COMBINATION DATA/POWER POKE-THRU, DEVICE WITH TWO (2) DUPLEX RECEPTACLES AND FOUR (4) DATA JACKS. REFER TO TELECOM PLANS AND SPECIFICATIONS FOR MORE INFORMATION.
- (6) PT — COMBINATION DATA/POWER POKE-THRU, DEVICE WITH TWO (2) DUPLEX RECEPTACLES AND SIX (6) DATA JACKS. REFER TO TELECOM PLANS AND SPECIFICATIONS FOR MORE INFORMATION.
- AV — AUDIO/VIDEO OUTLET, ON FLUSH WALL MOUNTED OUTLET BOX WITH COVERPLATE AND GROMETTED OPENING. PROVIDE OUTLET BOX, COVERPLATE AND 1.5" CONDUIT CONCEALED IN WALL TO THE ACCESSIBLE CEILING SPACE UNLESS NOTED OTHERWISE. PROVIDE AV CABLES FROM THE INSTRUCTORS DESK TO THE LCD DISPLAY OR SHORT THROW PROJECTOR LOCATED AT THE TEACHING WALL. MOUNT AV OUTLET AT INSTRUCTOR'S DESK AT +18". MOUNT AV OUTLET AT LCD DISPLAY OR SHORT THROW PROJECTORS AT +70".
- TC — AUDIO/VIDEO CONTROL PANEL, ON FLUSH IN WALL MOUNTED OUTLET BOX, +45" A.F.F. LOCATED AT INSTRUCTOR'S DESK. PROVIDE CONTROL PANEL, OUTLET BOX AND 1" CONDUIT CONCEALED IN WALL DOWN TO AV CONNECTOR PLATE AT +18" A.F.F. PROVIDE AV CABLING BETWEEN AV CONTROL PANEL AND AV CONNECTOR PLATE IN ACCORDANCE WITH THE AV SYSTEM REQUIREMENTS.

- LIGHTING FIXTURE, RECESS MOUNTED, WITH OUTLET BOX.
- LIGHTING FIXTURE, SURFACE OR PENDANT MOUNTED ON FLUSH MOUNTED OUTLET BOX.
- INDUSTRIAL LIGHTING FIXTURE, SURFACE, CHAIN OR PENDANT MOUNTED ON FLUSH MOUNTED OUTLET BOX.
- LIGHTING FIXTURE, SURFACE OR PENDANT MOUNTED, ON FLUSH CEILING MOUNTED OUTLET BOX.
- LIGHTING FIXTURE, RECESS MOUNTED, WITH OUTLET BOX.
- LIGHTING FIXTURE, SURFACE OR FLUSH MOUNTED AS INDICATED ON FIXTURE SCHEDULE, ON WALL MOUNTED OUTLET BOX, +90". STEM INDICATES WALL MOUNTED OUTLET BOX, TYPICAL.
- OUTLET ON EMERGENCY OR NIGHT LIGHT LIGHTING CIRCUIT.
- POST TOP LIGHTING STANDARD, POLE MOUNTED LUMINAIRE AND POLE SUPPORT BASE.
- LIGHTING FIXTURE WITH LAMPS ON NORMAL AND EMERGENCY LIGHTING CIRCUITS, PROVIDE SEPARATE LAMP BALLASTS AS REQUIRED.
- J — LIGHTING FIXTURE RECESSED MOUNTED WITH OUTLET BOX AND REMOTE MOUNTED JUNCTION BOX CONCEALED ABOVE ACCESSIBLE CEILING. PROVIDE FLEXIBLE CONDUIT CONNECTION 6 FT. MAXIMUM LENGTH, 1/2" DIAMETER MINIMUM, FROM JUNCTION BOX TO FIXTURE OUTLET. PROVIDE CONDUCTORS IN CONDUIT, QUANTITY AS REQUIRED FOR INDICATED CIRCUITS AND SWITCHING CONTROLS, #12 (AWG) MINIMUM.
- LIGHTING STANDARD WITH SINGLE ARM MOUNTED LUMINAIRE AND POLE SUPPORT BASE.
- LIGHTING STANDARD WITH TWIN ARM MOUNTED LUMINARIES AND POLE SUPPORT BASE.
- UPLIGHT, MOUNTED FLUSH WITH FINISH GRADE.
- FLOODLIGHTING FIXTURE WITH WEATHERPROOF OUTLET BOX.
- TRACK LIGHTING WITH FIXTURE(S), CEILING, PENDANT, OR WALL MOUNTED, WITH FLUSH OUTLET BOX.
- EXIT SIGN SINGLE FACE, ON FLUSH CEILING MOUNTED OUTLET BOX. ARROW INDICATES DIRECTIONAL ARROW ON EXIT SIGN FACE. REFER TO ARCHITECTURAL DRAWINGS FOR PHOTOLUMINESCENT, FLOOR-LEVEL EXIT MARKERS AND EXIT PATH MARKINGS.
- EXIT SIGN DOUBLE FACE, ON FLUSH CEILING MOUNTED OUTLET BOX. REFER TO ARCHITECTURAL DRAWINGS FOR PHOTOLUMINESCENT, FLOOR-LEVEL EXIT MARKERS AND EXIT PATH MARKINGS.
- EXIT SIGN, ON FLUSH WALL MOUNTED OUTLET BOX, +90". REFER TO ARCHITECTURAL DRAWINGS FOR PHOTOLUMINESCENT, FLOOR-LEVEL EXIT MARKERS AND EXIT PATH MARKINGS.
- 2 / 100 — FIXTURE SCHEDULE DESIGNATION: "2" INDICATES FIXTURE TYPE, "100" INDICATES FIXTURE TOTAL WATTAGE.
- S 2,P a,b — SINGLE POLE TOGGLE SWITCH, ON FLUSH WALL MOUNTED OUTLET BOX, +45". INSTALL MULTIPLE SWITCHES UNDER COMMON COVER PLATE. SUBSCRIPT OR SUPERSCRIPT AT SWITCH SYMBOL INDICATES THE FOLLOWING:

  2 - DOUBLE POLE
  3 - THREE WAY
  4 - FOUR WAY
  P - PILOT LIGHT
  M - MANUAL MOTOR STARTERS
  K - KEY OPERATED
  R - SPDT MOMENTARY CONTACT RELAY SWITCH
  V - VAPOR PROOF
  a,b,c,d, ETC. - MULTIPLE SWITCHES WITH IDENTIFICATION OF OUTLET CONTROLLED

- SWITCH FOR CONTROL OF LOW VOLTAGE LIGHTING RELAY(S), ON FLUSH WALL MOUNTED OUTLET BOX, +45". INSTALL MULTIPLE SWITCHES UNDER COMMON COVER PLATE.
- D — DIMMING SYSTEM LIGHTING CONTROL STATION ON FLUSH IN WALL MOUNTED OUTLET BOX, +45".
- L — LOW VOLTAGE LIGHTING ON/OFF CONTROL SWITCH IN FLUSH IN WALL OUTLET BOX, +45".
- E — LOW VOLTAGE CLASSROOM LIGHTING ENTRANCE CONTROL STATION IN FLUSH IN WALL OUTLET BOX, +45"
- I — LOW VOLTAGE INSTRUCTORS CLASSROOM LIGHTING DIMMING CONTROL STATION IN FLUSH IN WALL OUTLET BOX, +45".
- OS — LIGHTING CONTROL OCCUPANCY MOTION SENSOR ON FLUSH CEILING MOUNTED OUTLET BOX. MOUNT CENTERED IN CEILING TILE.
- LC — LIGHTING LEVEL CONTROLLER (PHOTO SENSOR) ON FLUSH CEILING MOUNTED OUTLET BOX. MOUNT CENTERED IN CEILING TILE.
- LIGHTING CONTROL OCCUPANCY SENSOR ON FLUSH WALL MOUNTED OUTLET BOX, +45".
- DUPLEX CONVENIENCE RECEPTACLE VERTICAL ON FLUSH WALL MOUNTED OUTLET BOX, +18". STEM INDICATES WALL MOUNTED OUTLET BOX, TYPICAL.
- DUPLEX CONVENIENCE RECEPTACLE HORIZONTAL ON FLUSH WALL MOUNTED OUTLET BOX, +6" ABOVE COUNTER SPLASH.
- DUPLEX CONVENIENCE RECEPTACLE SPLIT WIRED, ON FLUSH WALL MOUNTED OUTLET BOX, +18".
- DOUBLE DUPLEX (FOUR-PLEX) CONVENIENCE RECEPTACLE ON ONE FLUSH WALL MOUNTED OUTLET BOX +18".
- DUPLEX CONVENIENCE RECEPTACLE WITH INTERNAL GROUND FAULT INTERRUPTER, VERTICAL ON FLUSH WALL MOUNTED OUTLET BOX +18". U.N.O.
- DOUBLE DUPLEX CONVENIENCE RECEPTACLE WITH INTERNAL GROUND FAULT INTERRUPTER, VERTICAL ON FLUSH WALL MOUNTED OUTLET BOX +18". U.N.O.
- DUPLEX CONVENIENCE RECEPTACLE WITH INTERNAL GROUND FAULT INTERRUPTER, HORIZONTAL ON FLUSH WALL MOUNTED OUTLET BOX, +6" ABOVE COUNTER SPLASH. U.N.O.
- WP — DUPLEX CONVENIENCE RECEPTACLE, WITH INTERNAL GROUND FAULT INTERRUPTER, IN FLUSH WALL MOUNTED ENCLOSURE WITH HINGED DOOR, LOCK AND KEY, +18".
- WP — DUPLEX CONVENIENCE RECEPTACLE, WITH INTERNAL GROUND FAULT INTERRUPTER, ON FLUSH WALL MOUNTED OUTLET BOX WITH SPRING DOOR COVER, +18" U.N.O.
- LC — DUPLEX CONVENIENCE RECEPTACLE, IN FLUSH IN WALL OUTLET BOX, +18". CONTROLLED BY THE ROOM'S LIGHTING CONTROL SYSTEM IN ACCORDANCE WITH CEC TITLE 24 LIGHTING REQUIREMENTS. PROVIDE GREEN COVER PLATE.
- R — DOUBLE DUPLEX CONVENIENCE RECEPTACLE IN FLUSH FLOOR OUTLET BOX. "R" DESIGNATION INDICATES RECESSED FLOOR BOX WITH MULTI-SERVICE FITTINGS, WIREMOLD "RFB" SERIES BOX OR EQUAL.
- DUPLEX CONVENIENCE RECEPTACLE, IN FLUSH FLOOR OUTLET BOX, UNLESS NOTED OTHERWISE. "R" DESIGNATION INDICATES RECESSED FLOOR BOX WITH MULTI SERVICE FITTINGS, WIREMOLD "RFB" SERVICE BOX OR EQUAL.
- P — DUPLEX CONVENIENCE RECEPTACLES, BACK TO BACK, "P" INDICATES PEDESTAL TYPE ON SURFACE MOUNTED OUTLET BOX.
- P — DUPLEX CONVENIENCE RECEPTACLE, ON FLUSH CEILING MOUNTED OUTLET BOX FOR PROJECTOR.
- J — JUNCTION BOX, FLUSH WALL MOUNTED, +18" U.N.O.
- J — JUNCTION BOX CONCEALED ABOVE ACCESSIBLE CEILING OR ON EXPOSED CEILING. U.N.O.
- J — INDICATES CONNECTION TO EQUIPMENT AS REQUIRED, TYPICAL. U.N.O.
- T — THERMOSTAT ON FLUSH WALL MOUNTED OUTLET BOX, REFER TO MECHANICAL DRAWINGS FOR HEIGHT AND LOCATION.
- A / E-1 — PANELBOARD, ADJACENT LINE INDICATES PANEL FRONT. ADJACENT BALLOON INDICATES PANEL DESIGNATION "A", SEE DRAWING E-1 FOR PANEL SCHEDULE.
- TERMINAL CABINET OR EQUIPMENT CABINET. ADJACENT LINE INDICATES CABINET FRONT.
- DBA / E-1 — FLOOR STANDING SWITCHGEAR ADJACENT BALLOON INDICATES EQUIPMENT DESIGNATION "DBA", SEE DRAWING E-1 FOR SINGLE LINE DIAGRAM AND/OR SCHEDULE.
- TERMINAL CABINET OR EQUIPMENT CABINET. ADJACENT LINE INDICATES CABINET FRONT.
- CIRCUIT BREAKER WITH ZERO SEQUENCE GROUND FAULT RELAY SYSTEM.
- TRANSFORMER; KVA, LINE AND LOAD VOLTAGE RATINGS AS INDICATED.
- FUSED SAFETY SWITCH (DISCONNECT), HORSE POWER RATED. MOUNT ON WALL +45", OR ON EQUIPMENT +36". PROVIDE SWITCH AND FUSES SIZED PER EQUIPMENT MANUFACTURER REQUIREMENTS.

ABBREVIATIONS

A.F.F.	ABOVE FINISH FLOOR
A.F.G.	ABOVE FINISH GRADE
AWG	AMERICAN WIRE GAUGE
AMP, A	AMPERE
A.I.C.	AMPERES INTERRUPTING CAPACITY (SYMMETRICAL)
AF/AT	AMP FRAME, AMP TRIP
AS/AF	AMP SWITCH, AMP FUSE
CIRC., CKT.	CIRCUIT
CB	CIRCUIT BREAKER
C	CONDUIT
C.O.	CONDUIT ONLY
CONN	CONNECTED
CLCB	CURRENT LIMITING CIRCUIT BREAKER
DIA	DIAMETER
EMCS	ENERGY MANAGEMENT CONTROL SYSTEM
EMT	ELECTRICAL METALLIC TUBING
EWC	ELECTRIC WATER COOLER
E-O-L	END-OF-LINE CIRCUIT TERMINATOR
EF	EXHAUST FAN
FT OR '	FEET
FA	FIRE ALARM
FLA	FULL LOAD AMPS
GFI	GROUND FAULT INTERRUPTER
GRD	GROUND
HOA	HAND-OFF-AUTO
HVAC	HEATING, VENTILATING AND AIR CONDITIONING
H.,W.,D.,L.	HEIGHT, WIDTH, DEPTH, LENGTH
HID	HIGH INTENSITY DISCHARGE
HP	HORSEPOWER
HPS	HIGH PRESSURE SODIUM
IN. OR "	INCHES
IG	ISOLATED GROUND
J-BOX	JUNCTION BOX
KVA	KILOVOLT AMPERES
KW	KILOWATT
LCL	LONG CONTINUOUS LOAD
L.F.	LINEAR FEET
LTG, LTS	LIGHTING
MCB	MAIN CIRCUIT BREAKER
MLO	MAIN LUGS ONLY
MH	METAL HALIDE
MCC	MOTOR CONTROL CENTER
MCM	THOUSAND CIRCULAR MILS
MCP	MOTOR CIRCUIT PROTECTOR
MTD	MOUNTED
MW	MICROWAVE
NEC	NATIONAL ELECTRIC CODE
NC	NORMALLY CLOSED
NO	NORMALLY OPEN
NF	NON-FUSED
NIC	NOT IN CONTRACT
NO. OR #	NUMBER
OFCI	OWNER FURNISHED, CONTRACTOR INSTALLED
PRIMARY	OVER 600 VOLTS
PH. OR Ø	PHASE
PROVIDE	FURNISH, INSTALL AND CONNECT
PA	PUBLIC ADDRESS
REC, RECEPT	RECEPTACLE
U.N.O.	UNLESS NOTED OTHERWISE

FIRE ALARM NOTES

FIRE ALARM SUBMITTAL IS A COMPLETE PLAN SUBMITTAL IN ACCORDANCE WITH PROJECT SUMITTAL GUIDELINE, GL-2(FLS) DATED 2/10/11

CABLE INSTALLATION NOTES

(APPLIES ONLY TO DATA NETWORK)

1. WHERE ACCESSIBLE SUSPENDED T-BAR CEILINGS OCCUR, CABLING FOR THE ABOVE REFERENCED SYSTEMS SHALL BE PROVIDED ROUTED VIA CABLE TRAY/BASKET TRAY. SEE SPECIFICATIONS FOR PERFORMANCE NOTES ON CABLE INSTALLATION.

2. CONDUITS SHALL BE PROVIDED WHERE CABLES ARE INSTALLED IN WALLS, BELOW GRADE AND AREAS OTHER THAN ABOVE ACCESSIBLE SUSPENDED T-BAR CEILINGS. CABLING INSTALLED UNDERGROUND SHALL BE SUITABLE FOR UNDERGROUND INSTALLATIONS.

ANCHORAGE NOTES

MEP COMPONENT ANCHORAGE NOTE

ALL MECHANICAL, PLUMBING, AND ELECTRICAL COMPONENTS SHALL BE ANCHORED AND INSTALLED PER THE DETAILS ON THE DSA APPROVED CONSTRUCTION DOCUMENTS. WHERE NO DETAIL IS INDICATED, THE FOLLOWING COMPONENTS SHALL BE ANCHORED OR BRACED TO MEET THE FORCE AND DISPLACEMENT REQUIREMENTS PRESCRIBED IN THE 2016 CBC, SECTIONS 1616A.1.18 THROUGH 1616A.1.26 AND ASCE 7-10 CHAPTER 13, 26 AND 30.

1. ALL PERMANENT EQUIPMENT AND COMPONENTS.
2. TEMPORARY OR MOVABLE EQUIPMENT THAT IS PERMANENTLY ATTACHED (E.G. HARD WIRED) TO THE BUILDING UTILITY SERVICES SUCH AS ELECTRICITY, GAS OR WATER.
3. MOVABLE EQUIPMENT WHICH IS STATIONED IN ONE PLACE FOR MORE THAN 8 HOURS AND HEAVIER THAN 400 POUNDS OR HAS A CENTER OF MASS LOCATED 4 FEET OR MORE ABOVE THE ADJACENT FLOOR OR ROOF LEVEL THAT DIRECTLY SUPPORT THE COMPONENT ARE REQUIRED TO BE ANCHORED WITH TEMPORARY ATTACHMENTS.

THE FOLLOWING MECHANICAL AND ELECTRICAL COMPONENTS SHALL BE POSITIVELY ATTACHED TO THE STRUCTURE, BUT THE ATTACHMENT NEED NOT BE DETAILED ON THE PLANS. THESE COMPONENTS SHALL HAVE FLEXIBLE CONNECTIONS PROVIDED BETWEEN THE COMPONENT AND ASSOCIATED DUCTWORK, PIPING, AND CONDUIT.

A. COMPONENTS WEIGHING LESS THAN 400 POUNDS AND HAVE A CENTER OF MASS LOCATED 4 FEET OR LESS ABOVE THE ADJACENT FLOOR OR ROOF LEVEL THAT DIRECTLY SUPPORT THE COMPONENT.
B. COMPONENTS WEIGHING LESS THAN 20 POUNDS, OR IN THE CASE OF DISTRIBUTED SYSTEMS, LESS THAN 5 POUNDS PER FOOT, WHICH ARE SUSPENDED FROM A ROOF OR FLOOR OR HUNG FROM A WALL.

FOR THOSE ELEMENTS THAT DO NOT REQUIRE DETAILS ON THE APPROVED DRAWINGS, THE INSTALLATION SHALL BE SUBJECT TO THE APPROVAL OF THE DESIGN PROFESSIONAL IN GENERAL RESPONSIBLE CHARGE OR STRUCTURAL ENGINEER DELEGATED RESPONSIBILITY AND THE DSA DISTRICT STRUCTURAL ENGINEER. OF RECORD AND THE DSA DISTRICT STRUCTURAL ENGINEER. THE PROJECT INSPECTOR WILL VERIFY THAT ALL COMPONENTS AND EQUIPMENT HAVE BEEN ANCHORED IN ACCORDANCE WITH ABOVE REQUIREMENTS.

PIPING, DUCTWORK, AND ELECTRICAL DISTRIBUTION SYSTEM BRACING NOTE

PIPING, DUCTWORK, AND ELECTRICAL DISTRIBUTION SYSTEMS SHALL BE BRACED TO COMPLY WITH THE FORCES AND DISPLACEMENTS PRESCRIBED IN ASCE 7-10 SECTION 13.3 AS DEFINED IN ASCE 7-10 SECTION 13.6.5.6, 13.6.7, 13.6.8, AND 2016 CBC, SECTIONS 1616A.1.24, 1616A.1.25 AND 1615A.1.26.

THE METHOD OF SHOWING BRACING AND ATTACHMENTS TO THE STRUCTURE FOR THE IDENTIFIED DISTRIBUTION SYSTEM ARE AS NOTED BELOW. WHEN BRACING AND ATTACHMENTS ARE BASED ON A PREAPPROVED INSTALLATION GUIDE (e.g., SMACNA OR OSHPD OPM), COPIES OF THE BRACING SYSTEM INSTALLATION GUIDE OR MANUAL SHALL BE AVAILABLE ON THE JOBSITE PRIOR TO THE START OF AND DURING THE HANGING AND BRACING OF THE DISTRIBUTION SYSTEMS. THE STRUCTURAL ENGINEER OF RECORD SHALL VERIFY THE ADEQUACY OF THE STRUCTURE TO SUPPORT THE HANGER AND BRACE LOADS.

MECHANICAL PIPING (MP), MECHANICAL DUCTS (MD), PLUMBING PIPING (PP), ELECTRICAL DISTRIBUTION SYSTEMS (E):

MP☐ MD☐ PP☐ E☒ - OPTION 1: DETAILED ON THE APPROVED DRAWINGS WITH PROJECT SPECIFIC NOTES AND DETAILS.

MP☐ MD☐ PP☐ E☐ - OPTION 2: SHALL COMPLY WITH APPLICABLE OSHPD PRE-APPROVAL (OPM#) #_______________.

MP☐ MD☐ PP☐ - OPTION 3: SHALL COMPLY WITH THE SMACNA SEISMIC RESTRAINT MANUAL, OSHPD EDITION (2009), INCLUDING ANY ADDENDA. FASTENERS AND OTHER ATTACHMENTS NOT SPECIFICALLY IDENTIFIED IN THE SMACNA SEISMIC RESTRAINT MANUAL, OSHPD EDITION, ARE DETAILED ON THE APPROVED DRAWINGS WITH PROJECT SPECIFIC NOTES AND DETAILS. THE DETAILS SHALL ACCOUNT FOR THE APPLICABLE SEISMIC HAZARD LEVEL ______ AND CONNECTION LEVEL _______ FOR THE PROJECT AND CONDITIONS.

GENERAL NOTES

1. UNLESS SPECIFICALLY SHOWN ON THESE PLANS NO STRUCTURAL MEMBER SHALL BE CUT. NEITHER DRILLED NOR NOTCHED. WITHOUT PRIOR WRITTEN AUTHORIZATION FROM THE STRUCTURAL ENGINEER AND THE DIVISION OF THE STATE ARCHITECT.

2. CONDUITS RUN ABOVE GRADE: PROVIDE OZ COMPANY TYPE "DX" EXPANSION/DEFLEXION FITTINGS WITH BONDING JUMPER ON ALL CONDUITS AT ALL BUILDING EXPANSION OR SEISMIC JOINT CROSSINGS.

ELECTRICAL DRAWING INDEX

E0-0.1	SYMBOL LIST, NOTES AND DETAILS
E0-0.2	SINGLE LINE DIAGRAM
E0-0.2A	SINGLE LINE DIAGRAM
E0-0.3	LIGHTING FIXTURE SCHEDULE & NOTES
E0-0.4	ENLARGED ELECTRICAL ROOMS
E0-0.5	ELECT. ANCHORAGE DETAILS
E0-0.6	ELECT. ANCHORAGE DETAILS
ES-1.0	SITE ELECTRICAL DEMOLITION PLAN
ES-1.1	OVERALL SITE ELECTRICAL PLAN
ES-1.2	ENLARGED SITE ELECTRICAL PLAN
ES-1.3	ENLARGED SITE LIGHTING PLAN
E1-1.1	FIRST FLOOR LIGHTING PLAN
E1-2.1	SECOND FLOOR LIGHTING PLAN
E2-1.1	FIRST FLOOR POWER PLAN
E2-2.1	SECOND FLOOR POWER PLAN
E2-2.2	ELECTRICAL ROOF PLAN
E3-1.1	PANEL SCHEDULES
E3-1.2	PANEL SCHEDULES
E3-1.3	ENERGY FORMS
E3-1.4	ENERGY FORMS
EF-0.1	FIRE ALARM SYMBOLS & DETAILS
EF-0.2	FIRE ALARM CALCULATIONS
EF-0.3	FIRE ALARM RISER DIAGRAMS
EF-1.0	ENLARGED SITE FIRE ALARM PLAN
EF-1.1	FIRST FLOOR FIRE ALARM PLAN
EF-2.1	SECOND FLOOR FIRE ALARM PLAN
ET-0.1	TELECOM SYMBOL LIST
ET-0.2	ENLARGED TELECOM ROOMS
ET-0.3	TELECOM RISER DIAGRAMS
ET-0.4	TELECOM DETAILS
ET-0.5	TELECOM DETAILS
ET-0.6	AV WIRING DIAGRAMS
ET-1.0	ENLARGED SITE TELECOM PLAN
ET-1.1	FIRST FLOOR TELECOM PLAN
ET-2.1	SECOND FLOOR TELECOM PLAN

IDENTIFICATION STAMP
DIV. OF THE STATE ARCHITECT
APP. 03-119458 INC:
REVIEWED FOR
SS ☑ FLS ☑ ACS ☑
DATE:05/23/2019

DIVISION OF THE STATE ARCHITECT
355 South Grand Avenue, Suite 2100
Los Angeles, CA 90012
ph: (213) 897-3995 fx:(213) 897-3159
agency

tBP architecture planning interiors

tBP/Architecture
4611 Teller Avenue
Newport Beach, CA 92660
ph: 949.673.0300 fx: 949.732.3895
architect

PROFESSIONAL ENGINEER No. E 20372 EXP. 09-30-20 ELECTRICAL STATE OF CALIFORNIA

FBA Engineering
Consulting Electrical Engineers
150 Paularino Avenue Suite A120
Costa Mesa, CA 92626
949.852.9995 • 949.852.1657 (fax)
fbaengr.com
FBA Job Number: 212.227
consultant

COMPTON COLLEGE
INSTRUCTIONAL BUILDING No.2
COMPTON COMMUNITY COLLEGE DISTRICT
1111 E. ARTESIA BLVD. COMPTON, CA.
owner

tBP project number: 20998.00
file name:
drawn by: checked by:
date: 04 / 08 / 2019
rev: date: description:

THIS DRAWING AND THE DESIGNS, DEPICTIONS, IDEAS AND OTHER INFORMATION CONTAINED HEREIN CONSTITUTE UNPUBLISHED WORK OF tBP/ARCHITECTURE AND SHALL REMAIN PROPERTY OF tBP/ARCHITECTURE IN PERPETUITY. NO PART THEREOF SHALL BE REPRODUCED, DISCLOSED, DISTRIBUTED, SOLD, PUBLISHED OR OTHERWISE USED IN ANY WAY WITHOUT THE ADVANCED EXPRESS WRITTEN CONSENT OF tBP/ARCHITECTURE.

drawing title:
SYMBOL LIST, NOTES AND DETAILS

drawing
E0-0.1
drawing of

FEEDER SCHEDULE

COPPER CONDUCTORS
THW 600V (AWG)

FEEDER TYPE	CONDUIT SIZE AND QUANTITY		CONDUCTORS IN EACH CIRCUIT		
			PHASE/NEUTRAL		EQUIPMENT GROUND WIRE SIZE
	QUAN.	SIZE	QUAN.	SIZE	
F20	1	3/4"	4	12	12
F30	1	3/4"	4	10	10
F40	1	1"	4	8	10
F50	1	1 1/4"	4	6	10
F60	1	1 1/2"	4	4	10
F70	1	1 1/2"	4	4	8
F80	1	2"	4	2	8
F90	1	2"	4	2	8
F100	1	2"	4	1	8
F110	1	2"	4	1	6
F125	1	2"	4	1/0	6
F150	1	2"	4	1/0	6
F175	1	2"	4	2/0	6
F200	1	2 1/2"	4	3/0	6
F225	1	3"	4	4/0	4
F250	1	3"	4	250MCM	4
F275	1	4"	4	350MCM	4
F300	1	4"	4	350MCM	4
F350	1	4"	4	500MCM	2
F400	2	2 1/2"	4	3/0	2
F500	2	3"	4	250MCM	2
F600	2	4"	4	350MCM	1
F700	2	4"	4	500MCM	1/0
F800	3	4"	4	350MCM	1/0
F900	3	4"	4	350MCM	2/0
F1000	3	4"	4	500MCM	2/0
F1200	4	4"	4	350MCM	3/0
F1600	5	4"	4	500MCM	4/0
F2000	6	4"	4	500MCM	250MCM
F2500	7	4"	4	500MCM	350MCM
F3000	8	4"	4	500MCM	500MCM
F4000	11	4"	4	500MCM	500MCM
F20/N	1	3/4"	3	12	12
F30/N	1	3/4"	3	10	10
F40/N	1	1"	3	8	10
F50/N	1	1"	3	6	10
F60/N	1	1 1/4"	3	4	10
F70/N	1	1 1/4"	3	4	8
F80/N	1	1 1/4"	3	2	8
F90/N	1	1 1/4"	3	2	8
F100/N	1	1 1/2"	3	1	8
F110/N	1	1 1/2"	3	1	6
F125/N	1	2"	3	1/0	6
F150/N	1	2"	3	1/0	6
F175/N	1	2"	3	2/0	6
F200/N	1	2"	3	3/0	6
F225/N	1	2 1/2"	3	4/0	4
F250/N	1	2 1/2"	3	250MCM	4
F275/N	1	3"	3	350MCM	4
F300/N	1	3"	3	350MCM	4
F350/N	1	4"	3	500MCM	2
F400/N	2	2"	3	3/0	2
F500/N	2	2 1/2"	3	250MCM	2
F600/N	2	3"	3	350MCM	1
F700/N	2	4"	3	500MCM	1/0
F800/N	3	3"	3	350MCM	1/0
F350/U	-	-	-	-	-
F400/U	2	3"	4	4/0	2
F500/U	2	4"	4	350MCM	1/0
F600/U	2	4"	4	500MCM	2/0
F700/U	2	4"	4	500MCM	2/0
F800/U	3	4"	4	350MCM	2/0
F900/U	3	4"	4	500MCM	4/0
F1000/U	3	4"	4	500MCM	4/0
F1200/U	4	4"	4	500MCM	250MCM
F1600/U	6	4"	4	500MCM	250MCM
F2000/U	8	4"	4	500MCM	350MCM
F2500/U	9	4"	4	500MCM	500MCM
F3000/U	11	4"	4	500MCM	500MCM
F4000/U	15	4"	4	500MCM	500MCM
F350/NU	-	-	-	-	-
F400/NU	2	3"	3	4/0	2
F500/NU	2	4"	3	350MCM	1/0
F600/NU	2	4"	3	500MCM	1/0
F700/NU	2	4"	3	500MCM	1/0
F800/NU	3	4"	3	350MCM	2/0
F60/DN	1	1 1/2"	3/1	4/1	10
F100/DN	1	2"	3/1	1/2/0	8
F125/DN	1	2 1/2"	5	1/0	6
F150/DN	1	2 1/2"	5	1/0	4
F225/DN	1	3"	5	4/0	4
F300/DN	1	4"	5	350MCM	2
F400/DN	2	3"	5	3/0	2
F600/DN	2	4"	5	350MCM	1
F800/DN	3	5"	5	350MCM	1/0
F1200/DN	4	4"	5	350MCM	3/0
F1600/DN	5	5"	5	500MCM	4/0

SINGLE LINE DIAGRAM GENERAL NOTES:

1. THE INTERRUPTING CAPACITY OF THE CIRCUIT BREAKERS IN 120/208 VOLT PANELBOARDS SHALL BE 10,000 A.I.C. TYPICAL, UNLESS NOTED OTHERWISE OR REQUIRED BY THE SHORT CIRCUIT STUDY.
2. CIRCUIT BREAKERS IN 120/208 VOLT DISTRIBUTION BOARDS SHALL BE SERIES RATED WITH DOWNSTREAM PANELBOARDS CIRCUIT BREAKERS FOR 22,000 A.I.C. UNLESS NOTED OTHERWISE OR REQUIRED BY THE SHORT CIRCUIT STUDY.
3. THE INTERRUPTING CAPACITY OF THE CIRCUIT BREAKERS IN 480/277 VOLT PANELBOARD SHALL BE 18,000 A.I.C. TYPICAL, UNLESS NOTED OTHERWISE OR REQUIRED BY THE SHORT CIRCUIT STUDY.
4. CIRCUIT PROTECTIVE DEVICES IDENTIFIED AS "SERIES RATED" OR "CURRENT LIMITING" (I.E., SR-SERIES RATED CIRCUIT BREAKER, CLCB-CURRENT LIMITING CIRCUIT BREAKER; CLF-CURRENT LIMITING FUSE, ETC.) SHALL BE SERIES RATED AND TESTED (UL 489 & CSA5) BY THE MANUFACTURER WITH ALL EQUIPMENT AND CIRCUIT PROTECTIVE DEVICES INSTALLED DOWN STREAM OF THE IDENTIFIED SERIES RATED OR CURRENT LIMITING DEVICE FOR 65,000 A.I.C. PROVIDE NAME PLATES ON ALL EQUIPMENT LOCATED DOWN STREAM, INCLUDING THE SR, CLCB AND CLF DEVICES, TO COMPLY WITH C.E.C. PARAGRAPHS 110-22 AND 240-86 "CAUTION SERIES RATED COMBINATION SYSTEM RATED NEW DEVICE INSTALLATIONS AND REPLACEMENTS SHALL BE OF THE SAME MANUFACTURER AND MODEL".
5. CIRCUIT BREAKERS RATED 1,200 AMPS AND GREATER SHALL COMPLY WITH ARC ENERGY REDUCTION PER C.E.C. 240.87 AND PER SPECIFICATIONS 262413.
6. PROVIDE SHORT CIRCUIT PROTECTIVE DEVICE COORDINATION AND ARC-FLASH STUDY INCLUDING THE ENGINEERED SETTINGS FOR EACH FUSE AND ADJUSTABLE CIRCUIT BREAKER SHOWING THE CORRECT TIME AND CURRENT SETTINGS TO PROVIDE COORDINATION WITHIN THE LIMITS OF THE SPECIFIED EQUIPMENT. REFER TO SPECIFICATIONS 262413 FOR ADDITIONAL REQUIREMENTS.
7. MAIN ELECTRICAL SERVICE SHALL NOT BE ENERGIZED UNTIL BUILDING INSPECTORS RECEIPT AND APPROVAL OF A THIRD PARTY NRTL TESTING LABORATORY PERFORMANCE TEST CERTIFICATION FOR THE SERVICE GROUND FAULT PROTECTION PER C.E.C. 230.95.
8. THE DIMENSIONS USED FOR SWITCHBOARDS ARE BASED UPON SQD MANUFACTURED PRODUCTS. IF ANOTHER MANUFACTURES PRODUCT IS FURNISHED, CONTRACTOR SHALL INSURE THAT THE PRODUCT WILL FIT WITHIN THE SPACE PROVIDED.

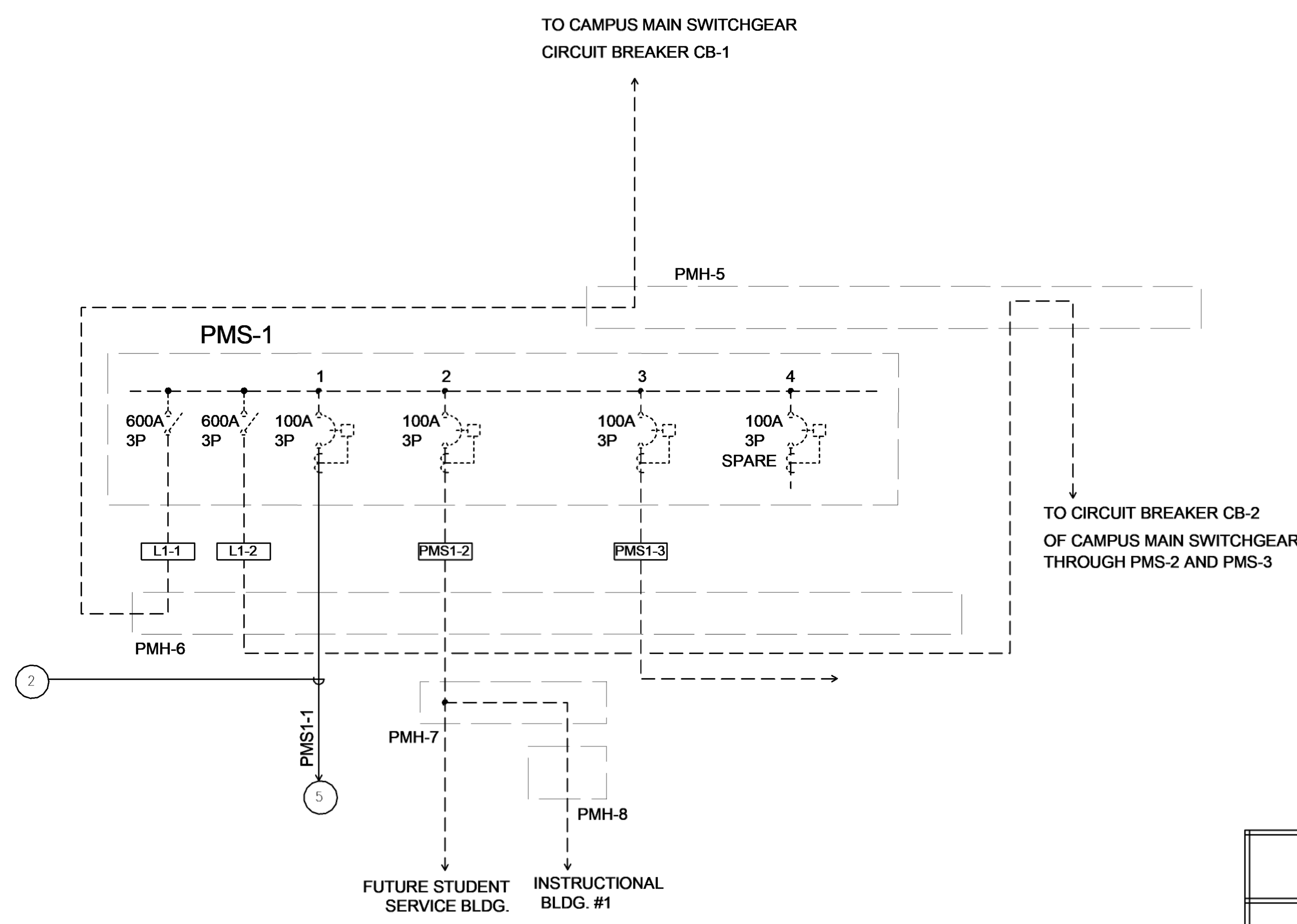

DETAIL "B' -SWITCH "PMS1" PARTIAL SINGLE LINE DIAGRAM

PLAN NOTES:

1. PROVIDE SHUNT TRIP MECHANISM ON MAIN CIRCUIT BREAKER SERVING THE ELEVATOR. THE HEAT DETECTORS IN THE ELEVATOR MACHINE ROOM AND ON TOP OF ELEVATOR SHAFT, UPON DETECTION OF HEAT, SHALL SHUTDOWN POWER TO THE ELEVATOR. INSTALL IN ACCORDANCE WITH ASME 17.1, NFPA AND ELEVATOR MANUFACTURER'S REQUIREMENTS.
2. PROVIDE (3) 1/0, 8KV, 115 MIL/133%, EPR, MV-105 UL CLASS & TEMP RATING, T5 SHIELDING, COPPER, (1) #6 GRD. - (N) 4"C.
3. 225 AMPERE - 120/208V.3PH.4W ELECTRONIC GRADE PANELBOARD WITH MAIN CIRCUIT BREAKER, INTERNAL TRANSIENT VOLTAGE SURGE SUPPRESSION (TVSS), EQUIPMENT GROUND AND ISOLATED GROUND BUS.
4. PROVIDE COMPLETE NETWORKED METERING SYSTEM PER SPECIFICATION STATION 26 0910.
5. SEE DETAIL "A" ON THIS SHEET FOR CONTINUATION.
6. SEE DETAIL "B" ON THIS SHEET FOR CONTINUATION.
7. PROVIDE 3/4"C. - 2#10, 1#10 GRD.
8. 100 AMPERE - 120/208V.3PH.4W ELECTRONIC GRADE PANELBOARD WITH MAIN CIRCUIT BREAKER, INTERNAL TRANSIENT VOLTAGE SURGE SUPPRESSION (TVSS), EQUIPMENT GROUND AND ISOLATED GROUND BUS.

COMPTON COLLEGE BLDG IB2 MAIN SWITCHBORAD "MDBH" LOAD CALCULATION			
LOAD DESCRIPTION	CONNECTED (KVA)	CONNECTED CURRENT(A)	REMARKS
PANEL HA1	20775	25	
AHU-2	102213	123	
ELEVATOR	33240	40	
PANEL DHM1	45705	55	
		0	
PANEL DPP1	135720	163.32	
PANEL DPP2	106200	127.8	
TOTAL CONNECTED LOADS	443853	534	

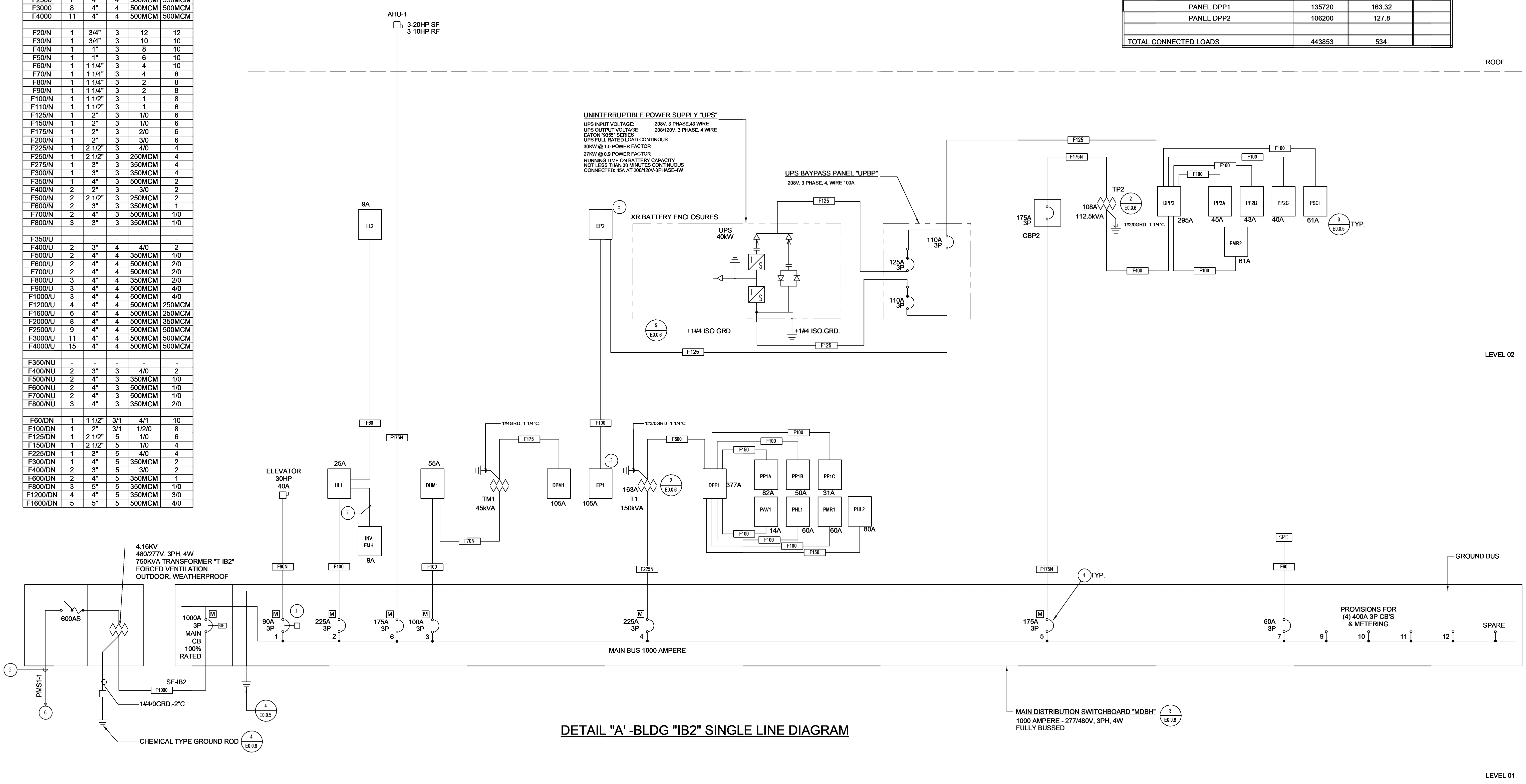

DETAIL "A' -BLDG "IB2" SINGLE LINE DIAGRAM

4/8/2019 4:14:15 PM

IDENTIFICATION STAMP
DIV. OF THE STATE ARCHITECT
APP. 03-119458 INC:
REVIEWED FOR
SS ☑ FLS ☑ ACS ☑
DATE:05/23/2019

DIVISION OF THE STATE ARCHITECT
355 South Grand Avenue, Suite 2100
Los Angeles, CA 90012
ph: (213) 897-3995 fx:(213) 897-3159
agency

tBP architecture planning interiors

tBP/Architecture
4611 Teller Avenue
Newport Beach, CA 92660
ph: 949.673.0300 fx: 949.732.3895
architect

FBAEngineering
Consulting Electrical Engineers
150 Paularino Avenue Suite A120
Costa Mesa, CA 92626
949.852.9995 • 949.852.1657 (fax)
fbaengr.com
FBA Job Number: 212.227
consultant

COMPTON COLLEGE
INSTRUCTIONAL BUILDING No.2

COMPTON COMMUNITY COLLEGE DISTRICT
1111 E. ARTESIA BLVD. COMPTON, CA.
owner

tBP project number: 20998.00
file name:
drawn by: checked by:
date: 04 / 08 / 2019
rev: date: description:

THIS DRAWING AND THE DESIGNS, DEPICTIONS, IDEAS AND OTHER INFORMATION CONTAINED HEREIN CONSTITUTE UNPUBLISHED WORK OF tBP/ARCHITECTURE AND SHALL REMAIN PROPERTY OF tBP/ARCHITECTURE IN PERPETUITY. NO PART THEREOF SHALL BE REPRODUCED, DISCLOSED, DISTRIBUTED, SOLD, PUBLISHED OR OTHERWISE USED IN ANY WAY WITHOUT THE ADVANCED EXPRESS WRITTEN CONSENT OF tBP/ARCHITECTURE.

drawing title:
SINGLE LINE DIAGRAM

drawing
E0-0.2
drawing of

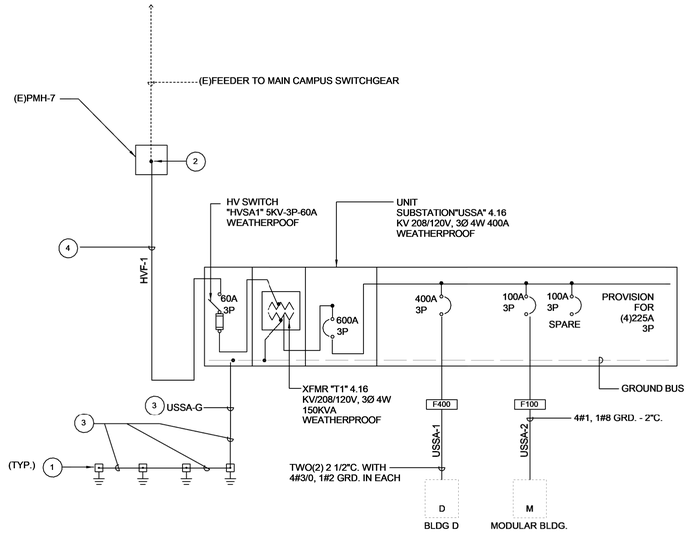

SINGLE LINE DIAGRAM - BUILDING D AND MODULAR BUILDING

SINGLE LINE DIAGRAM KEY NOTES:

1. PROVIDE 12" X 12" X 12"D. BOTTOMLESS CONCRETE PULLBOX WITH PEA GRAVEL BASE AND CHEMICAL ASSEMBLY GROUND ROD. MOUNT PULLBOX FLUSH ON GRADE AND ENGRAVE COVER "GROUND"; QUANTITY AS REQUIRED TO ACHIEVE 5 OHMS TO GROUND MAXIMUM.
2. INTERCEPT AT HIGH VOLTAGE FEEDER IN THE VAULT AND EXTEND AS INDICATED.
3. PROVIDE 1 1/2"C. 1#3/0 GRD.
4. PROVIDE 5"C. 3#1/0, 1#4GRD. 5KV CABLE.

IDENTIFICATION STAMP
DIV. OF THE STATE ARCHITECT
APP. 03-119458 INC:
REVIEWED FOR
SS ☑ FLS ☑ ACS ☑
DATE:05/23/2019

DIVISION OF THE STATE ARCHITECT
355 South Grand Avenue, Suite 2100
Los Angeles, CA 90012
ph: (213) 897-3995 fx:(213) 897-3159

agency

tBP
architecture
planning
interiors

tBP/Architecture
4611 Teller Avenue
Newport Beach, CA 92660
ph: 949.673.0300 fx: 949.732.3895

architect

FBA Engineering
Consulting Electrical Engineers
150 Paularino Avenue, Suite A120
Costa Mesa, CA 92626
949.852.9995 • 949.852.1657 (fax)
fbaengr.com
FBA Job Number: 212.227

consultant

COMPTON COLLEGE
INSTRUCTIONAL BUILDING No.2
COMPTON COMMUNITY COLLEGE DISTRICT
1111 E. ARTESIA BLVD. COMPTON, CA.

owner

tBP project number: 20998.00
file name:
drawn by: checked by:
date: 04 / 08 / 2019

rev:	date:	description:

THIS DRAWING AND THE DESIGNS, DEPICTIONS, IDEAS AND OTHER INFORMATION CONTAINED HEREIN CONSTITUTE UNPUBLISHED WORK OF tBP/ARCHITECTURE AND SHALL REMAIN PROPERTY OF tBP/ARCHITECTURE IN PERPETUITY. NO PART THEREOF SHALL BE REPRODUCED, DISCLOSED, DISTRIBUTED, SOLD, PUBLISHED OR OTHERWISE USED IN ANY WAY WITHOUT THE ADVANCED EXPRESS WRITTEN CONSENT OF tBP/ARCHITECTURE.

drawing title:
SINGLE LINE DIAGRAM

drawi
E0-0.2A
drawing of

4/8/2019 4:14:17 PM

LIGHTING FIXTURE SCHEDULE-

FIXTURE TYPE	Count	LIGHT FIXTURE DESCRIPTION	FIXTURE MAXIMUM TOTAL INPUT WATTS	FIXTURE MOUNTING	LAMP TYPE	LAMP COLOR TEMPERATURE K	LAMP CRI, NOT LESS THAN	TOTAL ALL LAMPS INITIAL MINIMUM LUMEN OUTPUT	LAMP QUANTITY	WEIGHT	MOUNTING DETAIL	LTG - CATALOG NUMBER
A1	207	LED 2X4, CENTER DIFFUSER INTEGRAL 0-10V. DIMMING DRIVER.	61	RECESSED	LED	4000	82	5000		27.3 LBS		FOCAL POINT "EQUATION 2" SERIES #FEQ2-24-5500L-40K-1C-UNV-L11-G-WH OR EQUAL.
B1	38	LED DOWNLIGHT, 6" APERTURE CLEAR DIFFUSER SELF FLANGE REFLECTOR; INTEGRAL 0-10V. DIMMING DRIVER.	29	RECESSED	LED	4000	90	2500		5 LBS		FOCAL POINT "ID +6" SERIES #-FLC6D-RO-2500L-277-L11-T-LC6-RD-2000 L-940K-DN-CD-NP OR EQUAL
C1	15	LED STRIP LIGHT, LENSED, 4 FOOT LENGTH; INTEGRAL 0-10V. DIMMING BALLAST	23	SURFACE	LED	4000	82	2857		8.2 LBS		METALUX "SNLED" SERIES #4SNLED-LD5-27SL-LW-UNV-L8XX-CD1-U OR EQUAL
C2	9	LED CHAIN SUSPENDED STRIP LIGHT, LENSED, 4 FOOT LENGTH; INTEGRAL 0-10V. DIMMING BALLAST	23	CHAIN	LED	4000	82	2857		8.2 LBS		METALUX "SNLED" SERIES #4SNLED-LD5-27SL-LW-UNV-L8XX-CD1-U OR EQUAL
D1	29	LED LINEAR LIGHT FIXTURE, 6" WIDE, SOLID REGRESSED TRIM, 4 FOOT LENGTH INTEGRAL 0-10V. DIMMABLE DRIVER(S).	58	RECESSED	LED	4000	82			30 LBS		FOCAL POINT "AVENUE 6" SERIES #FAV6L-SR-625LF-40K-1C-UNV-L11-F-WH-4'
E1	4	LED 72" RING FIXTURE	73	CABLE	LED	4000	82	6155		100 LBS		EUREKA "CYCLE" SERIES #4800-72-LED-UNV-40-DV-AC-60-RCC-WHM
F1	14	LED LINEAR WALL WASH LIGHT FIXTURE IN CUSTOM LENGTHS AS SHOWN ON DRAWINGS; INTEGRAL DIMMABLE DRIVERS.	28/4 FT	RECESSED	LED	4000	82					FOCAL POINT "FOCUS WALL WASH" #FWSL-FL-450LF-40K-1C-UNV-L11-U-WH-X X
G1	6	LED DIRECT/INDIRECT LUMINARE 9" X 2 1/2" ALUMINUM HOUSING IN FINISH AS SELECTED BY ARCHITECT. 8'-0" LENGTH (SEE DRAWING FOR OVERAL LENGTH) CABLE SUSPENSION TO MOUNTING HEIGHT INDICATED ON DRAWINGS; FINISH AS SELECTED BY ARCHITECT.	158.4	CABLE	LED	4000	80					CORELITE #VB-W5-5-L40-1-D-UNV-AC-48-T1-XX-HLO-CC OR EQUAL BY LEDALITE, PEERLESS
SL1	37	LED DECORATIVE WALKWAY LIGHT; TYPE IV DISTRIBUTION; ON 12'-0", 4" DIAMETER, 7 GAUGE STEEL POLE; 120 LUXEON LED EMITTERS; ADVANCE DRIVER; INTERNAL WIRELESS LED CONTROLLER; FIXTUREAND POLE FINISH AS SELECTED BY ARCHITECT; PROVIDE COMPLETE WITH ANCHOR BOLTS AND BOLT COVER.	165	POLE	LED	4000	82	5816		20 LBS		FORMULA TECHNOLOGIES #SBMTL-2626-IV 120LED-208V-350MA 12'(4" ROUND) 7 GAUGE STRAIGHT STEEL POLE. FINISH AS SELECTED BY ARCHITECT.
SL2	12	LED SHARP CUT OFF WALL LIGHT; TRAPEZOIDAL SHAPE; INTEGRAL DRIVER; WET LOCATION; TYPE 3 DISTRIBUTION.	44	WALL	LED	4000	82	3500				MCGRAW EDISON "GALLEON" WALL MOUNT #GWC-AF-1-LED-E1-T3 OR EQUAL BY PHILLIPS GARDCO; LITHONIA "D" SERIES.
SL3	2	LED DOWNLIGHT, 6" APERTURE CLEAR DIFFUSER SELF FLANGE REFLECTOR; INTEGRAL 0-10V. DIMMING DRIVER.	29	RECESSED	LED	4000	90	2500		5 LBS		FOCAL POINT "ID +6" SERIES #-FLC6D-RO-2500L-277-L11-T-LC6-RD-2000 L-940K-DN-CD-NP OR EQUAL
SL4	1	LED STEP LIGHT FIXTURE	7.7	RECESSED	LED	4000	80	312		2.60 LBS		WE-EF LIGHTING "STN254" SERIES #615-1520-LED-UNV-40K-ETL
X1	5	LED EXIT SIGN, EDGE LIT, GREEN LETTERS, MIRRORED BACKING, CEILING MOUNT.	3	CEILING	LED							ISOLITE "ELT-FT" SERIES OR EQUAL
X2	7	LED EXIT SIGN, EDGE LIT, GREEN LETTERS, MIRRORED BACKING, WALL MOUNT.	3	WALL	LED							ISOLITE "ELT-FT" SERIES OR EQUAL

Grand total: 386

INVERTER PANEL SCHEDULE: EMH

Project: INSTRUCTIONAL BUILDING NO. 2 **Mains:**
Location: Space 397
Supply From: HL1
Volts: 480/277 Wye

CKT	Circuit Description	Voltage	Quantity	Rating	Number of Poles	Load	Control
1	1ST & 2ND FLOOR ELECTRICAL/TELECOM ROOMS	277 V	8	20 A	1	184 VA	
2	1ST FLOOR CORRIDOR	277 V	9	20 A	1	151 VA	
3	1ST FLOOR EXIT SIGNS	277 V	14	20 A	1	828 VA	
4	2ND FLOOR CORRIDOR	277 V	4	20 A	1	12 VA	
5	2ND FLOOR EXIT SIGN	277 V	3	20 A	1	674 VA	
6	EXTERIOR LIGHTING	277 V	15	20 A	1	588 VA	
7	Spare	--	--	20 A	1	0 VA	
8	Spare	--	--	20 A	1	0 VA	
9	Spare	--	--	20 A	1	0 VA	
10	Spare	--	--	20 A	1	0 VA	
11	Spare	--	--	20 A	1	0 VA	
12	Spare	--	--	20 A	1	0 VA	
13	Spare	--	--	20 A	1	0 VA	
14	Spare	--	--	20 A	1	0 VA	
15	Spare	--	--	20 A	1	0 VA	
16	Spare	--	--	20 A	1	0 VA	
17	Spare	--	--	20 A	1	0 VA	
18	Spare	--	--	20 A	1	0 VA	
19	Spare	--	--	20 A	1	0 VA	
20	Spare	--	--	20 A	1	0 VA	
						Total Conn. Load:	2244 VA
						Total Amps:	3 A

Notes:
PT/TC - PHOTOCELL ON / TIMECLOCK OFF FUNCTION OF LIGHTING CONTROL PANEL
PC/PC - PHOTOCELL ON / PHOTOCELL OFF FUNCTION OF LIGHTING CONTROL PANEL
LC - LIGHTING CONTROL SYSTEM

PERFORMANCE NOTES:

1. ALL LED DRIVERS SHALL BE DIMMABLE AND COMPATIBLE WITH THE SPECIFIED LUTRON QUANTITY "ECO" LIGHTING CONTROL SYSTEM.

LIGHTING CONTROL RELAY SCHEDULE "MLCP"

RELAY	CKT. NO.	SWITCH	MASTER SWITCH	AREA CONTROLLED
1	HL1-5	P/T	-	WALKWAY LIGHTS
2	HL1-7	P/P	-	WALKWAY LIGHTS
3	HL1-6	P/T	-	WALKWAY LIGHTS
4	HL1-8	P/P	-	WALKWAY LIGHTS
5	HL1-EMH-6	P/P	-	BUILDING EXT - LIGHTS
6	-	-	-	PROVISION
7	-	-	-	PROVISION
8	-	-	-	PROVISION
9	-	-	-	PROVISION
10	-	-	-	PROVISION
11	-	-	-	PROVISION
12	-	-	-	PROVISION

P/P = PHOTOCELL ON / PHOTOCELL OFF

P/T = PHOTOCELL ON / TIMECLOCK OFF

T/T = TIMECLOCK ON / TIMECLOCK OFF

FIXTURE NOTES

(NOTE: REFER TO SPECIFICATIONS FOR ADDITIONAL REQUIREMENTS)

1. FIXTURES LOCATED OUTDOORS SHALL BE RATED FOR STARTING AND OPERATING TEMPERATURES BELOW 0-DEGREES FAHRENHEIT.
2. FIXTURES WITH THE SAME TYPE # SHALL BE THE PRODUCTS OF THE SAME MANUFACTURER, (I.E., TYPE #1, 1A, 1B, ETC., SHALL BE THE SAME MANUFACTURER).
3. THE CONTRACTOR SHALL VERIFY ACTUAL CEILING AND WALL CONSTRUCTION TYPE AS DEFINED ON THE ARCHITECTURAL DRAWINGS AND FURNISH LIGHTING FIXTURES WITH THE CORRECT AND COMPLETE MOUNTING HARDWARE AND MOUNTING DEVICES TO ACCOMMODATE BUILDING CONSTRUCTION AT EACH INSTALL LOCATION, WHETHER OR NOT SUCH VARIATIONS ARE INDICATED BY THE FIXTURE CATALOG NUMBER.
4. THE CONTRACTOR SHALL VERIFY DEPTH OF ALL RECESSED LIGHTING FIXTURES WITH ARCHITECTURAL DRAWINGS PRIOR TO ORDERING FIXTURES. ANY DISCREPANCIES THAT WILL CAUSE RECESSED FIXTURES NOT TO FIT INTO CEILING/WALL SPACES SHALL BE REPORTED TO THE OWNER'S REPRESENTATIVE PRIOR TO SUBMITTING SHOP DRAWINGS AND PRIOR TO ORDERING FIXTURES.
5. LIGHT FIXTURES RECESSED IN CEILING OR WALL WITH A ONE HOUR OR MORE FIRE RATING BUILDING CONSTRUCTION, EACH FIXTURE SHALL BE ENCLOSED IN A BOX WHICH HAS A FIRE RATING EQUAL TO THAT OF THE BUILDING CONSTRUCTION. PROVIDE MINIMUM OF 3" CLEAR FROM ALL SIDES AND TOP OF RECESSED LIGHT FIXTURES.
6. WALL AND CEILING INSULATION SHALL BE INSTALLED TO ALLOW 3" MINIMUM CLEARANCE FROM BOTTOM, SIDES AND TOP OF RECESSED LIGHT FIXTURES.
7. VERIFY MOUNTING HEIGHT OF ALL WALL MOUNTED FIXTURES WITH ARCHITECT PRIOR TO ROUGH-IN.
8. REFER TO ARCHITECTURAL REFLECTED CEILING PLANS AND WALL ELEVATIONS FOR EXACT INSTALL LOCATION OF ALL FIXTURES.
9. VERIFY VOLTAGE BEING SUPPLIED TO FIXTURES PRIOR TO SUBMITTING SHOP DRAWINGS AND PRIOR TO ORDERING. FIXTURE VOLTAGE SHALL MATCH BRANCH CIRCUITS CONNECTING TO RESPECTIVE FIXTURE.
10. SUSPENDED MOUNT LIGHT FIXTURES THAT MAY STRIKE STRUCTURAL ELEMENTS, WALL OR MECHANICAL DUCT WORK IF SWIVELED AT +45-DEGREES SHALL BE SWAY BRACED WITH AIR CRAFT CABLE TO PREVENT STRIKING SAID APPURTENANCES DURING SEISMIC EVENTS, AS REQUIRED.
11. OCCUPANCY MOTION SENSOR SYSTEM SHALL BE PROVIDED IN EVERY ROOM/SPACE LOCATION THROUGHOUT THE FACILITY AND AS DESCRIBED IN THE SPECIFICATIONS, WHETHER SYMBOLS ARE SHOWN OR NOT SHOWN ON THE PLANS.
12. PROVIDE TESTING CERTIFICATION AND COMMISSIONING OF LIGHTING FIXTURES, INSTALLATION, LIGHTING CONTROL SYSTEM AND LIGHTING SYSTEM OPERATION.
13. CONTRACTOR SHALL COORDINATE INSTALLATION OF RECESSED LIGHTING FIXTURES IN HARD LID OR STUCCO CEILING AREAS WITH FRAMING CONTRACTOR.
14. ALL EDGE-LIT EXIT SIGNS SHALL HAVE MIRRORED BACKING.

LIGHT POLE UNDER 35 FT HIGH IS NOT PART OF DSA APPROVAL

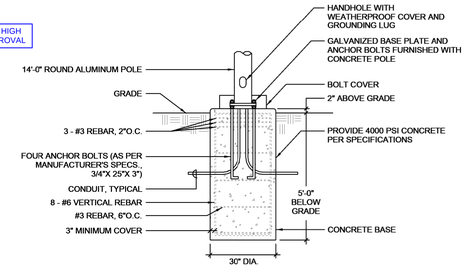

POLE BASE DETAIL - WALKWAY | A

A. WHERE PENDANT MOUNTED LIGHT FIXTURES ARE TO BE INSTALLED IN AREAS WITH A SUSPENDED CEILING, THE CONSTRUCTION DOCUMENTS SHALL INCLUDE COMPLETE SUPPORT DETAILS COMPLYING WITH THIS IR AND DSA IR 16-9.

B. SUPPORT PENDANT MOUNTED LIGHT FIXTURES DIRECTLY FROM THE STRUCTURE ABOVE WITH HANGER WIRES OR CABLES PASSING THROUGH EACH PENDANT HANGER AND CAPABLE OF SUPPORTING TWO (2) TIMES THE WEIGHT OF THE FIXTURE.

C. IF A PENDANT MOUNTED LIGHT FIXTURE IS DIRECTLY AND INDEPENDENTLY BRACED BELOW THE CEILING (I.E., AIRCRAFT CABLES TO WALLS), THEN A BRACE ASSEMBLY IS NOT REQUIRED ABOVE THE CEILING.

D. IF A PENDANT MOUNTED LIGHT FIXTURE IS FREE TO SWING 45 DEGREES FROM VERTICAL IN ALL DIRECTIONS, AND IS NOT DIRECTLY AND INDEPENDENTLY BRACED BELOW THE CEILING, THEN A BRACING ASSEMBLY IS ONLY REQUIRED WHERE THE PENDANT HANGER PENETRATES THE CEILING. SPECIAL DETAILS ARE REQUIRED TO ATTACH THE PENDANT HANGER TO THE BRACING ASSEMBLY TO TRANSMIT THE HHORIZONTAL AND VERTICAL FORCES. EXCEPTION: WHERE THE WEIGHT OF THE FIXTURE IS LESS THAN 20 POUNDS, THE VERTICAL COMPONENT OF THE BRACE FORCE NEED NOT BE CONSIDERED SO NO COMPRESSION STRUT/POST IS REQUIRED.

E. RIGID CONDUIT SHALL NOT BE USED FOR ATTACHMENT OF THE FIXTURES.

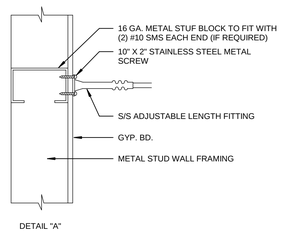

DETAIL "A"

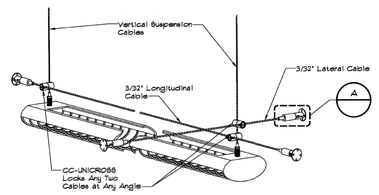

PENDANT MOUNTED LIGHT FIXTURE ANCHORAGE | B

IDENTIFICATION STAMP
DIV. OF THE STATE ARCHITECT
APP. 03-119458 INC:
REVIEWED FOR
SS ☑ FLS ☑ ACS ☑
DATE:05/23/2019

DIVISION OF THE STATE ARCHITECT
355 South Grand Avenue, Suite 2100
Los Angeles, CA 90012
ph: (213) 897-3995 fx:(213) 897-3159

agency

tBP architecture planning interiors

tBP/Architecture
4611 Teller Avenue
Newport Beach, CA 92660
ph: 949.673.0300 fx: 949.732.3895

architect

FBA Engineering
Consulting Electrical Engineers
150 Paularino Avenue Suite A120
Costa Mesa, CA 92626
949.852.0999 • 949.852.1697 (fax)
fbaeng.com
FBA Job Number: 213.227

consultant

COMPTON COLLEGE
INSTRUCTIONAL BUILDING No.2
COMPTON COMMUNITY COLLEGE DISTRICT
1111 E. ARTESIA BLVD. COMPTON, CA.

owner

tBP project number: 20998.00
file name:
drawn by: checked by:
date: 04 / 08 / 2019

rev:	date:	description:

THIS DRAWING AND THE DESIGNS, DEPICTIONS, IDEAS AND OTHER INFORMATION CONTAINED HEREIN CONSTITUTE UNPUBLISHED WORK BY tBP/ARCHITECTURE AND SHALL REMAIN PROPERTY OF tBP/ARCHITECTURE IN PERPETUITY. NO PART THEREOF SHALL BE REPRODUCED, DISCLOSED, DISTRIBUTED, SOLD, PUBLISHED OR OTHERWISE USED IN ANY WAY WITHOUT THE ADVANCED EXPRESS WRITTEN CONSENT OF tBP/ARCHITECTURE.

drawing title:
LIGHTING FIXTURE SCHEDULE & NOTES

drawing
E0-0.3
drawing of

4/8/2019 4:14:19 PM

ELECTRICAL EQUIPMENT SCHEDULE

Panel	LOCATION	SHEET NUMBER	EQUIPMENT/SYSTEM DESCRIPTION	MAX WEIGHT (LBS.)	HEIGHT (IN.)	LENGTH (IN.)	WIDTH (IN.)	MOUNTING TYPE	ANCHOR DETAIL
LEVEL1									
DPP1	MAIN ELECTRICAL	E0-0.4	DIST. PANEL	400	72	36	8.25	WALL	5/E0-0.5
EMH	MAIN ELECTRICAL	E0-0.4	INVERTER	0	0	0	0	FLOOR	-
EP1	DATA 108	ET-0.2	PANELBOARD	200	48	20	6	WALL	3/E0-0.5
HL1	MAIN ELECTRICAL	E0-0.4	PANELBOARD	200	48	20	6	WALL	3/E0-0.5
MDBH	MAIN ELECTRICAL	E0-0.4	SWITCHBOARD-SECTIONS	1200 LBS/PER SELECTION	91.5	36	30	FLOOR	3/E0-0.6
MLCP	MAIN ELECTRICAL	E0-0.4	CONTROL PANEL	200	48	20	6	WALL	3/E0-0.5
PP1A	MAIN ELECTRICAL	E0-0.4	PANELBOARD	200	48	20	6	WALL	3/E0-0.5
PP1B	MAIN ELECTRICAL	E0-0.4	PANELBOARD	200	48	20	6	WALL	3/E0-0.5
PP1C	MAIN ELECTRICAL	E0-0.4	PANELBOARD	200	48	20	6	WALL	3/E0-0.5
T1	MAIN ELECTRICAL	E0-0.4	TRANSFORMER	620	49	52	32	FLOOR	2/E0-0.6
LEVEL 2									
CBP2	ELECTRICAL	E0-0.4	CIRCUIT BREAKER	200	48	20	6	WALL	3/E0-0.5
DHM1	ELECTRICAL	E0-0.4	PANELBOARD	200	48	20	6	WALL	3/E0-0.5
DPM1	ELECTRICAL	E0-0.4	PANELBOARD	200	48	20	6	WALL	3/E0-0.5
DPP2	ELECTRICAL	E0-0.4	PANELBOARD	400	72	36	8.25	WALL	5/E0-0.5
EP2	DATA 207	E0-0.4	PANELBOARD	200	48	20	6	WALL	3/E0-0.5
HL2	ELECTRICAL	E0-0.4	PANELBOARD	200	48	20	6	WALL	3/E0-0.5
PP2A	ELECTRICAL	E0-0.4	PANELBOARD	200	48	20	6	WALL	3/E0-0.5
PP2B	ELECTRICAL	E0-0.4	PANELBOARD	200	48	20	6	WALL	3/E0-0.5
PP2C	ELECTRICAL	E0-0.4	PANELBOARD	200	48	20	6	WALL	3/E0-0.5
T2	ELECTRICAL	E0-0.4	TRANSFORMER	620	49	52	32	FLOOR	2/E0-0.6
TM1	ELECTRICAL	E0-0.4	TRANSFORMER	620	49	52	32	FLOOR	2/E0-0.6
UPB-P	DATA 108	E0-0.4	PANELBOARD	200	48	20	6	WALL	3/E0-0.5
UPS BATTERY CABINET	DATA 108	E0-0.4	BATTERY CABINET	2166	81.5	35.5	23.5	FLOOR	5/E0-0.6

Branch Panel: EP1

INSTRUCTIONAL BUILDING NO. 2

Location: DATA 108
Supply From: EP2
Mounting: Surface

Volts: 120/208 Wye
Phases: 3
Wires: 4
Isolated Ground Bus:

A.I.C. Rating:
Mains Type:
Mains Rating: 60 A
MCB Rating: 100 A
200% NEUTRAL BUS

CKT	Circuit Description	Quan	Trip	Pole	A		B		C		Pole	Trip	Quan	Circuit Description	CKT
1	Receptacle DATA 108	1	20 A	1	180 VA	180 VA					1	20 A	1	Receptacle DATA 108	2
3	Receptacle DATA 108	1	20 A	1			180 VA	180 VA			1	20 A	1	Receptacle DATA 108	4
5	Receptacle DATA 108	1	20 A	1					180 VA	180 VA	1	20 A	1	Receptacle DATA 108	6
7	ACP DATA 108	1	20 A	1	200 VA	200 VA					1	20 A	1	FACP DATA 108	8
9	IDCP DATA 108	1	20 A	1			200 VA	200 VA			1	20 A	1	FAMP1 DATA 108	10
11	Receptacle DATA 108	1	20 A	2					1500...	200 VA	1	20 A	1	FPS1 DATA 108	12
13	--	--	--	--	1500...	1000...					1	20 A	1	Receptacle DATA 108	14
15	Receptacle DATA 108	1	20 A	2			1500...	0 VA			3	60 A	1	SPD (SURGE PROTECTIVE DEVICE) DATA...	16
17	--	--	--	--					1500...	0 VA	--	--	--	--	18
19	Receptacle DATA 108	1	20 A	2	1500...	0 VA					--	--	--	--	20
21	--	--	--	--			1500...	0 VA			1	20 A	--	Spare	22
23	Spare	--	20 A	1					0 VA	0 VA	1	20 A	--	Spare	24
25	Spare	--	20 A	1	0 VA	0 VA					1	20 A	--	Spare	26
27	Spare	--	20 A	1			0 VA	0 VA			1	20 A	--	Spare	28
29	Spare	--	20 A	1					0 VA	0 VA	1	20 A	--	Spare	30
				Total Load:	4760 VA		3760 VA		3560 VA						
				Total Amps:	40 A		32 A		30 A						

Legend:

Load Classification	Connected Load	Demand Factor	Estimated Demand	Panel Totals	
Other	0 VA	0.00%	0 VA		
Receptacle	11080 VA	95.13%	10540 VA	**Total Conn. Load:**	11080 VA
				Total Est. Demand:	10540 VA
				Total Conn.:	31 A
				Total Est. Demand:	29 A

Notes:
* PROVIDE LOCK-ON DEVICE TYPE CIRUIT BREAKER

Branch Panel: EP2

INSTRUCTIONAL BUILDING NO. 2

Location: Space 104
Supply From:
Mounting: Surface

Volts: 120/208 Wye
Phases: 3
Wires: 4
Isolated Ground Bus:

A.I.C. Rating:
Mains Type:
Mains Rating: 125 A
MCB Rating: 225 A
200% NEUTRAL BUS

CKT	Circuit Description	Quan	Trip	Pole	A		B		C		Pole	Trip	Quan	Circuit Description	CKT
1	Receptacle DATA 207	1	20 A	1	180 VA	180 VA					1	20 A	1	Receptacle DATA 207	2
3	Receptacle DATA 207	1	20 A	1			180 VA	180 VA			1	20 A	1	Receptacle DATA 207	4
5	Receptacle DATA 207	1	20 A	1					180 VA	180 VA	1	20 A	1	Receptacle DATA 207	6
7	FPS2 DATA 207	1	20 A	1	100 VA	100 VA					1	20 A	1	ACT2 DATA 207	8
9	FAMP2 DATA 207	1	20 A	1			100 VA	1500 VA			2	20 A	1	Receptacle DATA 207	10
11	IDTC2 DATA 207	1	20 A	1					100 VA	1500 VA	--	--	--	--	12
13	Spare	--	20 A	1	0 VA	1000 VA					1	20 A	1	Receptacle DATA 207	14
15	Spare	--	20 A	1			0 VA	0 VA			3	60 A	1	SPD (SURGE PROTECTICE DEVICE) DAT...	16
17	Spare	--	20 A	1					0 VA	0 VA	--	--	--	--	18
19	Spare	--	20 A	1	0 VA	0 VA					--	--	--	--	20
21	Spare	--	20 A	1			0 VA	0 VA			1	20 A	--	Spare	22
23	Spare	--	20 A	1					0 VA	0 VA	1	20 A	--	Spare	24
25	Spare	--	20 A	1	0 VA	0 VA					1	20 A	--	Spare	26
27	Spare	--	20 A	1			0 VA	0 VA			1	20 A	--	Spare	28
29	Spare	--	20 A	1					0 VA	0 VA	1	20 A	--	Spare	30
31	Provision	--	--	--	0 VA	4760 VA					3	60 A	1	EP1 SUBFEED DATA 108	32
33	Provision	--	--	--			0 VA	3760 VA			--	--	--	--	34
35	Provision	--	--	--					0 VA	3560 VA	--	--	--	--	36
37	Provision	--	--	--	0 VA	0 VA					--	--	--	Provision	38
39	Provision	--	--	--			0 VA	0 VA			--	--	--	Provision	40
41	Provision	--	--	--					0 VA	0 VA	--	--	--	Provision	42
				Total...	6320 VA		5720 VA		5520 VA						
				Total...	53 A		48 A		46 A						

Legend:

Load Classification	Connected Load	Demand Factor	Estimated Demand	Panel Totals	
Other	0 VA	0.00%	0 VA		
Receptacle	16160 VA	80.94%	13080 VA	**Total Conn. Load:**	16160 VA
				Total Est. Demand:	13080 VA
				Total Conn.:	45 A
				Total Est. Demand:	36 A

Notes:
* PROVIDE LOCK-ON DEVICE TYPE CIRCUIT BREAKER

4/8/2019 4:14:23 PM

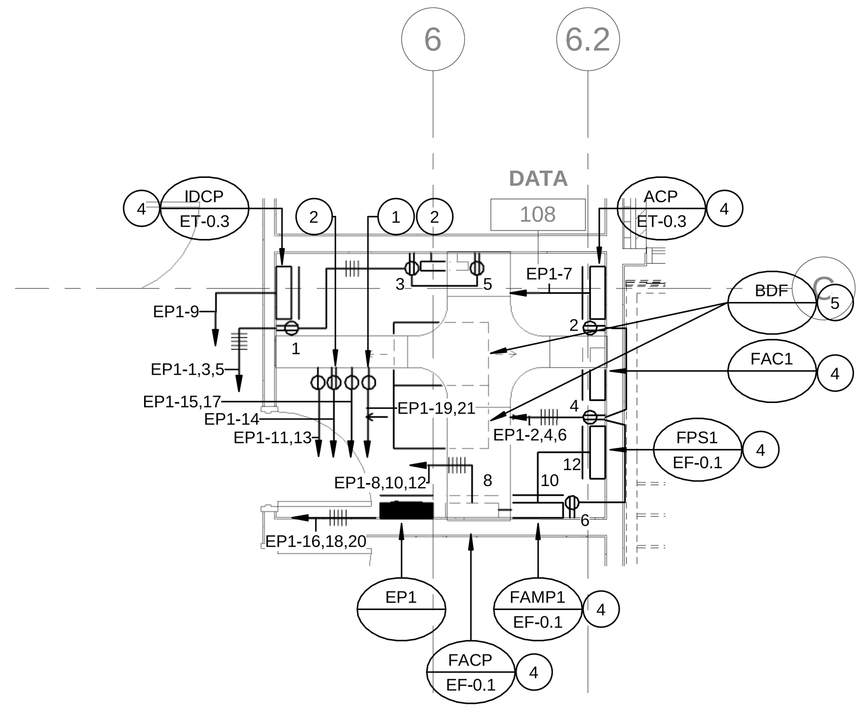

ENLARGED DATA 108 - LEVEL 01 (3)
SCALE 1/4" = 1'-0"

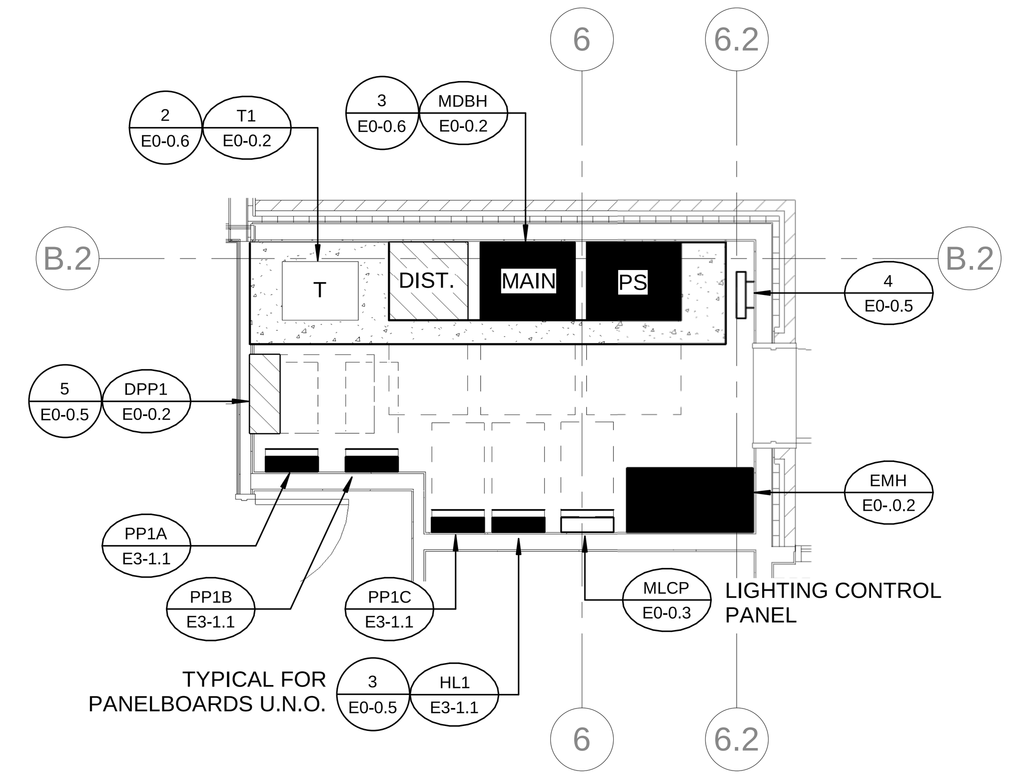

ENLARGED ELECTRICAL ROOM- LEVEL 01 (1)
SCALE 1/4" = 1'-0"

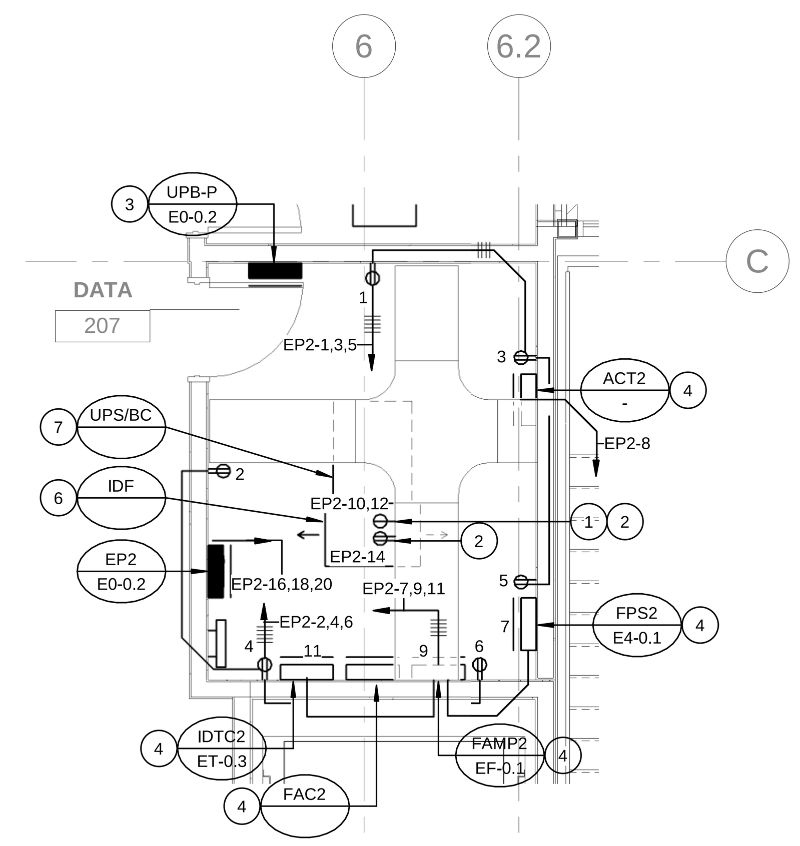

ENLARGED DATA 207 - LEVEL 02 (4)
SCALE 1/4" = 1'-0"

ENLARGED DATA 108/207 KEY NOTES:

1. PROVIDE 240V-2P-30A SPECIAL RECEPTACLE FOR IDF RACK. VERIFY EXACT TYPE OF RECEPTACLE.
2. MOUNT RECEPTACLE ON THE CABLE TRAY.
3. PROVIDE UPS SYSTEM BY-PASS PANEL.
4. SEE SHEET ET-0.2 FOR PANEL INFORMATION.
5. TWO FLOOR STANDING, 24"W x 36"D x 84"H BUILDING DATA FRAME RACK.
6. ONE FLOOR STANDING 24"W x 36"D x 84"H INTERMEDIATE DATA FRAME RACK.
7. FLOOR STAND UPS/BATTERY CABINET 39"W x 30"D x 66"H.

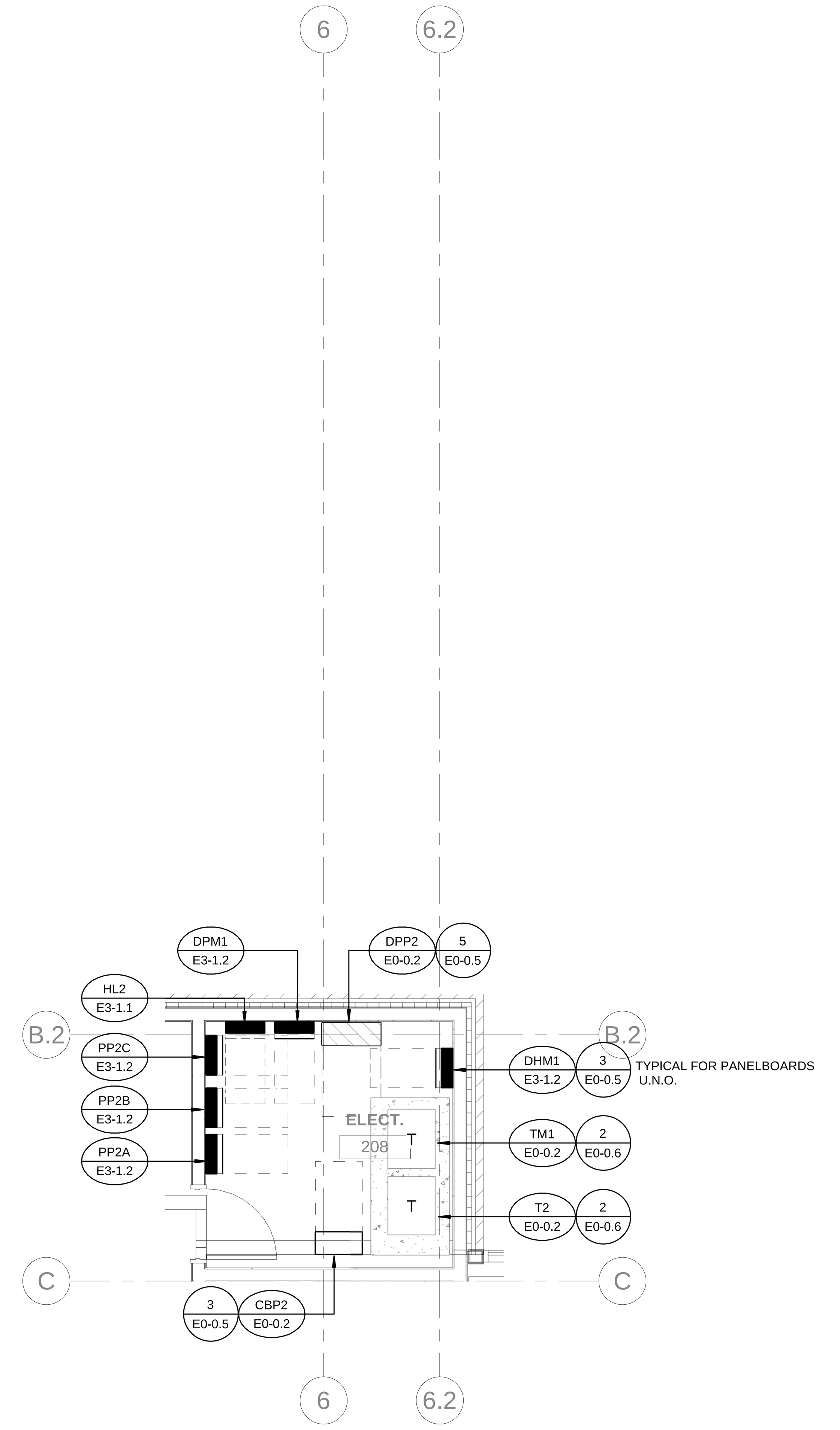

ENLARGED ELECTRICAL ROOM - LEVEL 02 (2)
SCALE 1/4" = 1'-0"

IDENTIFICATION STAMP
DIV. OF THE STATE ARCHITECT
APP. 03-119458 INC:
REVIEWED FOR
SS ☑ FLS ☑ ACS ☑
DATE: 05/23/2019

DIVISION OF THE STATE ARCHITECT
355 South Grand Avenue, Suite 2100
Los Angeles, CA 90012
ph: (213) 897-3995 fx:(213) 897-3159
agency

tBP
architecture planning interiors
tBP/Architecture
4611 Teller Avenue
Newport Beach, CA 92660
ph: 949.673.0300 fx: 949.732.3895
architect

FBA Engineering
Consulting Electrical Engineers
150 Paularino Avenue Suite A120
Costa Mesa, CA 92626
949.852.9995 • 949.852.1657 (fax)
fbaengr.com
FBA Job Number: 212.227
consultant

COMPTON COLLEGE
INSTRUCTIONAL BUILDING No.2
COMPTON COMMUNITY COLLEGE DISTRICT
1111 E. ARTESIA BLVD. COMPTON, CA.
owner

tBP project number: 20998.00
file name:
drawn by: checked by:
date: 04 / 08 / 2019
rev: date: description:

THIS DRAWING AND THE DESIGNS, DEPICTIONS, IDEAS AND OTHER INFORMATION CONTAINED HEREIN CONSTITUTE UNPUBLISHED WORK OF tBP/ARCHITECTURE AND SHALL REMAIN PROPERTY OF tBP/ARCHITECTURE IN PERPETUITY. NO PART THEREOF SHALL BE REPRODUCED, DISCLOSED, DISTRIBUTED, SOLD, PUBLISHED OR OTHERWISE USED IN ANY WAY WITHOUT THE ADVANCED EXPRESS WRITTEN CONSENT OF tBP/ARCHITECTURE.

drawing title:
ENLARGED ELECTRICAL ROOMS

drawing
E0-0.4
drawing of

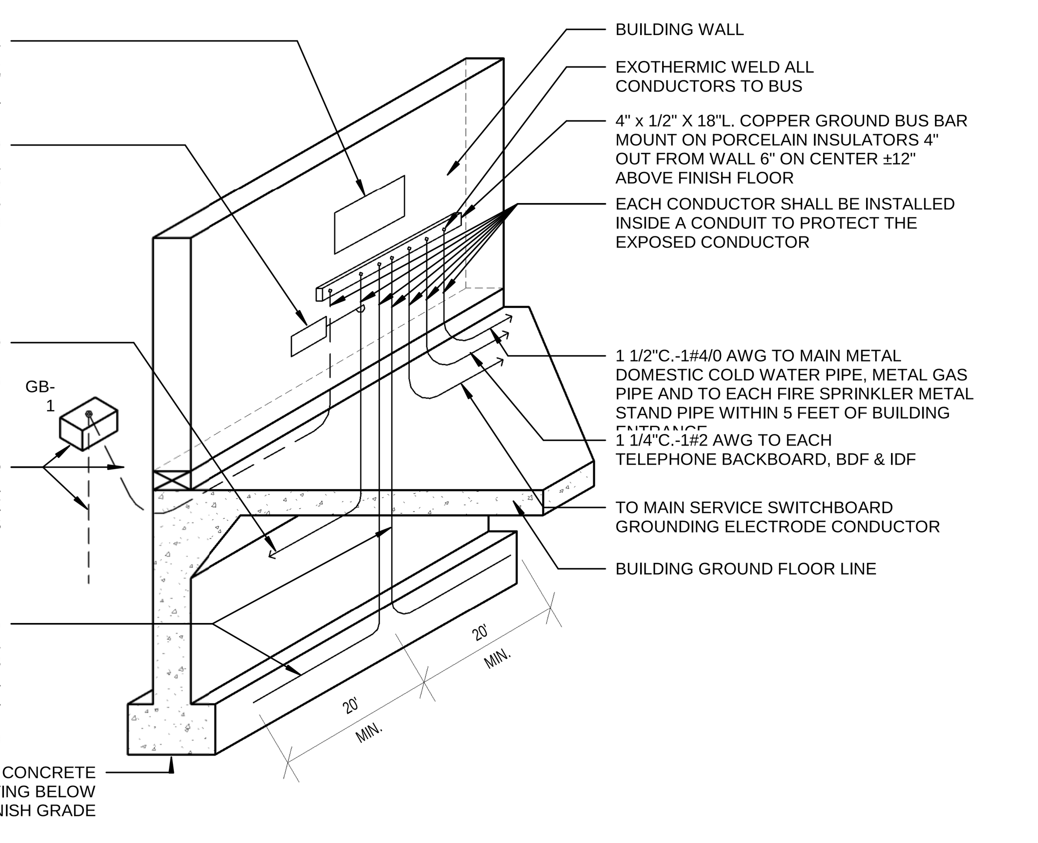

BUILDING ELECTRICAL SERVICE GROUND BUS DETAIL
SCALE N.T.S. — 4

1. WALL ASSEMBLY -- THE 1 OR 2 HR FIRE-RATED GYPSUM WALLBOARD/STUD WALL ASSEMBLY SHALL BE CONSTRUCTED THE MATERIALS AND IN THE MANNER SPECIFIED IN OF THE INDIVIDUAL U300 OR U400 SERIES WALL AND PARTITION DESIGNS IN THE UL FIRE RESISTANCE DIRECTORY AND SHALL INCLUDE THE FOLLOWING CONSTRUCTION FEATURES:

   STUDS -- WALL FRAMING MAY CONSIST OF EITHER WOOD STUDS OR STEEL CHANNEL STUDS. WOOD STUDS TO CONSIST OF NOM 2 BY 4 IN. LUMBER SPACED 16 IN. OC. STEEL STUDS TO BE MIN 2-1/2 IN. WIDE AND SPACED MAX 24 IN. OC. WHEN STEEL STUDS ARE USED AND THE DIAM OF OPENING EXCEEDS THE WIDTH OF STUD CAVITY, THE OPENING SHALL BE FRAMED ON ALL SIDES USING LENGTHS OF STEEL STUD INSTALLED BETWEEN THE VERTICAL STUDS AND SCREW-ATTACHED TO THE STEEL STUDS AT EACH END. THE FRAMED OPENING IN THE WALL SHALL BE 4 TO 6 IN. WIDER AND 4 TO 6 IN. HIGHER THAN THE DIAM. OF THE PENETRATING ITEM SUCH THAT WHEN THE PENETRATING ITEM IS INSTALLED IN THE OPENING, A 2 TO 3 IN. CLEARANCE IS PRESENT BETWEEN THE PENETRATING ITEM AND THE FRAMING ON ALL FOUR SIDES.

   GYPSUM BOARD* -- 5/8 IN. THICK, 4 FT WIDE WITH SQUARE OR TAPERED EDGES. THE GYPSUM BOARD TYPE, THICKNESS, NUMBER OF LAYERS, FASTENER TYPE AND SHEET ORIENTATION SHALL BE AS SPECIFIED IN THE INDIVIDUAL U300 OR U400 SERIES DESIGN IN THE UL FIRE RESISTANCE DIRECTORY. MAX DIAM OF OPENING IS 32-1/4 IN. FOR STEEL STUD WALLS. MAX DIAM OF OPENING IS 14-1/2 IN. FOR WOOD STUD WALLS. THE F RATING OF THE FIRESTOP SYSTEM IS EQUAL TO THE FIRE RATING OF THE WALL ASSEMBLY.

2. THROUGH-PENETRANTS -- ONE METALLIC PIPE, CONDUIT OR TUBING TO BE INSTALLED EITHER CONCENTRICALLY OR ECCENTRICALLY WITHIN THE FIRESTOP SYSTEM. THE ANNULAR SPACE SHALL BE MIN 0 IN. TO MAX 2-1/4 IN. PIPE MAY BE INSTALLED WITH CONTINUOUS POINT CONTACT. PIPE, CONDUIT OR TUBING MAY BE INSTALLED AT AN ANGLE NOT GREATER THAN 45 DEGREES FROM PERPENDICULAR. PIPE, CONDUIT OR TUBING TO BE RIGIDLY SUPPORTED ON BOTH SIDES OF WALL ASSEMBLY. THE FOLLOWING TYPES AND SIZES OF METALLIC PIPES, CONDUITS OR TUBING MAY BE USED:

   A. STEEL PIPE -- NOM 30 IN DIAM (OR SMALLER) SCHEDULE 10 (OR HEAVIER) STEEL PIPE.

   B. IRON PIPE -- NOM 30 IN. DIAM (OR SMALLER) CAST OR DUCTILE IRON PIPE.

   C. CONDUIT -- NOM 4 IN DIAM (OR SMALLER) STEEL ELECTRICAL METALLIC TUBING OR 6 IN. DIAM STEEL CONDUIT.

   D. COPPER TUBING -- NOM 6 IN. DIAM (OR SMALLER) TYPE L (OR HEAVIER) COPPER TUBING.

   E. COPPER PIPE -- NOM 6 IN. DIAM (OR SMALLER) REGULAR (OR HEAVIER) COPPER PIPE.

3. FILL, VOID OR CAVITY MATERIAL* -- SEALANT -- MIN 5/8 IN. THICKNESS OF FILL MATERIAL APPLIED WITHIN THE ANNULUS, FLUSH WITH BOTH SURFACES OF WALL. AT THE POINT OR CONTINUOUS CONTACT LOCATIONS BETWEEN PIPE AND WALL, A MIN 1/2 IN. DIAM BEAD OF FILL MATERIAL SHALL BE APPLIED AT THE PIPE WALL INTERFACE ON BOTH SURFACES OF WALL .

HILTI CONSTRUCTION CHEMICALS, DIV OF
HILTI INC -- FS-ONE SEALANT
*BEARING THE UL CLASSIFICATION MARK

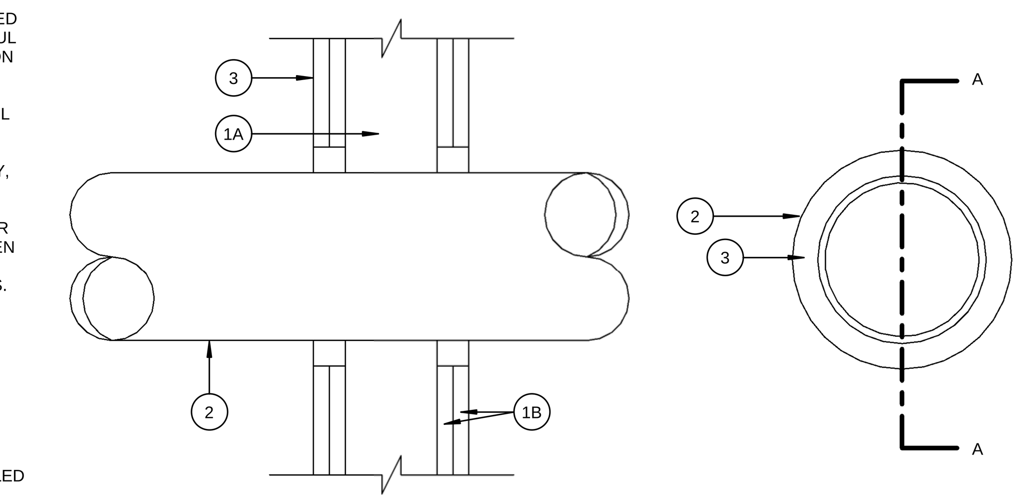

SECTION A-A

System No. W-L-1054
F Ratings - 1 and 2 Hr (See Items 1 and 3)
T Rating - 0 Hr
L Rating At Ambient - Less Than 1 CFM/Sq Ft
L Rating At 400 F - 4 CFM/Sq Ft

RATED STUD WALL FIRE STOP DETAIL
SCALE N.T.S. — 1

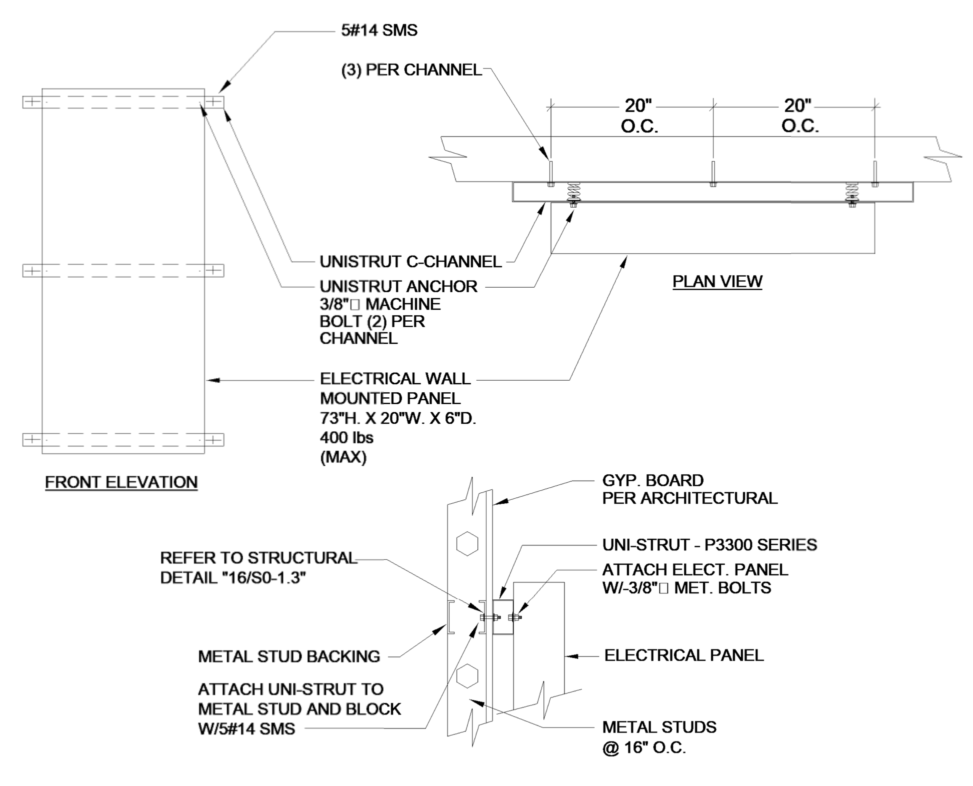

SURFACE MOUNTED DISTRIBUTION PANELBOARD ANCHORAGE
SCALE N.T.S. — 5

1. FLOOR OR WALL ASSEMBLY MIN 4-1/2 IN. THICK REINFORCED LIGHTWEIGHT OR NORMAL WEIGHT (100-150 PCF) CONCRETE. WALL MAY ALSO BE CONSTRUCTED OF ANY UL CLASSIFIED CONCRETE BLOCKS*. MAX DIAM OF OPENING IS 32 IN.

2. METALLIC SLEEVE (OPTIONAL) NOM 32 IN. DIAM (OR SMALLER) SCHEDULE 40 (OR HEAVIER) STEEL SLEEVE CAST OR GROUTED INTO FLOOR OR WALL ASSEMBLY, FLUSH WITH FLOOR OR WALL SURFACES.

3. THROUGH-PENETRANT ONE METALLIC PIPE OR CONDUIT TO BE INSTALLED EITHER CONCENTRICALLY OR ECCENTRICALLY WITHIN THE FIRESTOP SYSTEM. THE ANNULAR SPACE BETWEEN PIPE OR CONDUIT AND PERIPHERY OF OPENING SHALL BE MIN 0 IN. (POINT CONTACT) TO MAX 1-7/8 IN. PIPE MAY BE INSTALLED WITH CONTINUOUS POINT CONTACT. PIPE OR CONDUIT TO BE RIGIDLY SUPPORTED ON BOTH SIDES OF FLOOR OR WALL ASSEMBLY. THE FOLLOWING TYPES AND SIZES OF METALLIC PIPES OR CONDUITS MAY BE USED:

   A. STEEL PIPE: NOM 30 IN. DIAM (OR SMALLER) SCHEDULE 10 (OR HEAVIER) STEEL PIPE.

   B. IRON PIPE: NOM 30 IN. DIAM (OR SMALLER) CAST OR DUCTILE IRON PIPE.

   C. COPPER PIPE: NOM 6 IN. DIAM (OR SMALLER) REGULAR (OR HEAVIER) COPPER PIPE.

   D. COPPER TUBING: NOM 6 IN. DIAM (OR SMALLER) TYPE L (OR HEAVIER) COPPER TUBING.

   E. CONDUIT: NOM 6 IN. DIAM (OR SMALLER) STEEL CONDUIT.

   F. CONDUIT: NOM 4 IN. DIAM (OR SMALLER) STEEL ELECTRICAL METALLIC TUBING (EMT).

4. FIRE STOP SYSTEM THE FIRESTOP SYSTEM SHALL CONSIST OF THE FOLLOWING:

   A. PACKING MATERIAL MIN 4 IN. THICKNESS OF MIN 4 PCF MINERAL WOOL BATT INSULATION FIRMLY PACKED INTO OPENING AS A PERMANENT FORM. PACKING MATERIAL TO BE RECESSED FROM TOP SURFACE OF FLOOR OR FROM BOTH SURFACES OF WALL AS REQUIRED TO ACCOMMODATE THE REQUIRED THICKNESS OF FILL MATERIAL.

   B. FILL, VOID OR CAVITY MATERIAL* -- SEALANT MIN 1/4 IN. THICKNESS OF FILL MATERIAL APPLIED WITHIN THE ANNULUS, FLUSH WITH TOP SURFACE OF FLOOR OR WITH BOTH SURFACES OF WALL. AT THE POINT OR CONTINUOUS CONTACT LOCATIONS BETWEEN PIPE AND CONCRETE, A MIN 1/4 IN. DIAM BEAD OF FILL MATERIAL SHALL BE APPLIED AT THE CONCRETE/PIPE INTERFACE ON THE TOP SURFACE OF FLOOR AND ON BOTH SURFACES OF WALL.

HILTI CONSTRUCTION CHEMICALS, DIV OF
HILTI INC - FS-One Sealant
*Bearing the UL Classification Marking

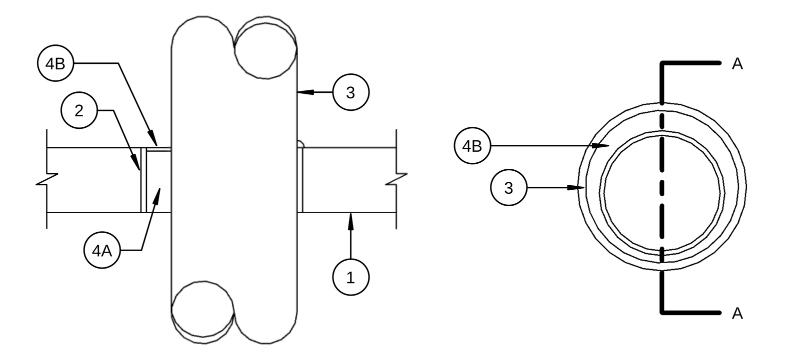

SECTION A-A

System No. C-AJ-1226
F RATING = 3-HR.
T RATING = 0-HR.

L Rating At Ambient - Less than 1 CFM/Sq Ft
L Rating At 400 F - 4 CFM/Sq Ft

RATED CONCRETE FLOOR/WALL SINGLE CONDUIT FIRE STOP DETAIL
SCALE N.T.S. — 2

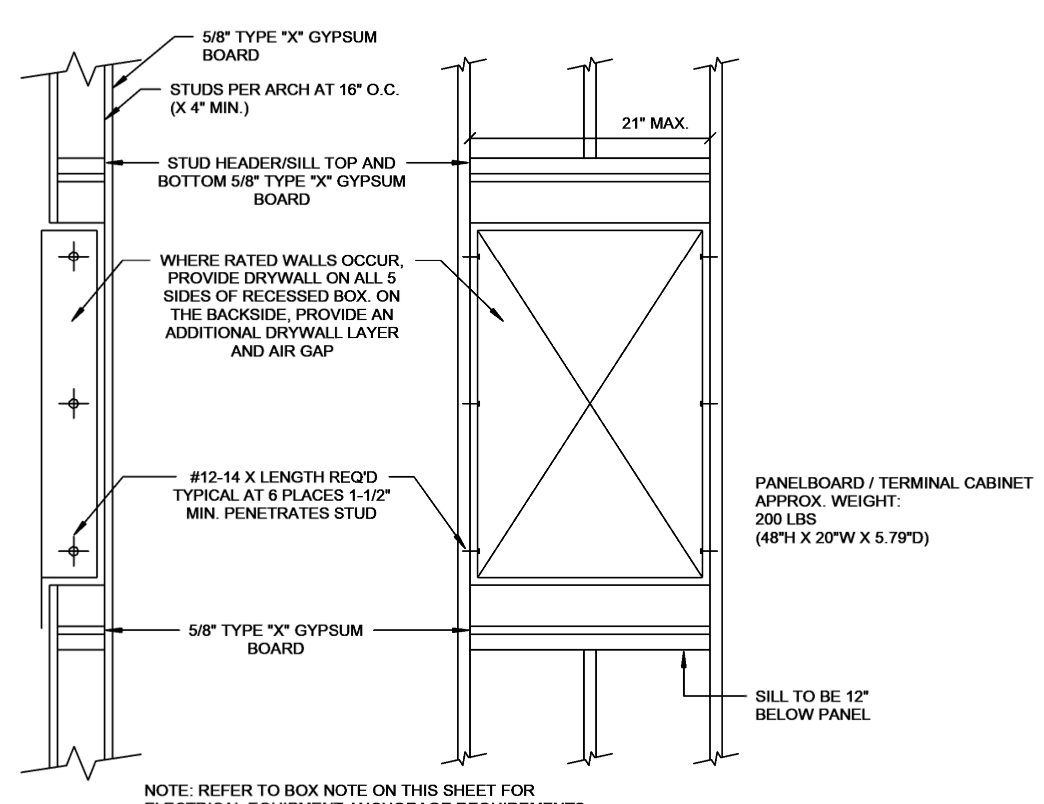

NOTE: REFER TO BOX NOTE ON THIS SHEET FOR ELECTRICAL EQUIPMENT ANCHORAGE REQUIREMENTS

PANELBOARD/TERMINAL CABINET ANCHORAGE-FLUSH
SCALE N.T.S. — 6

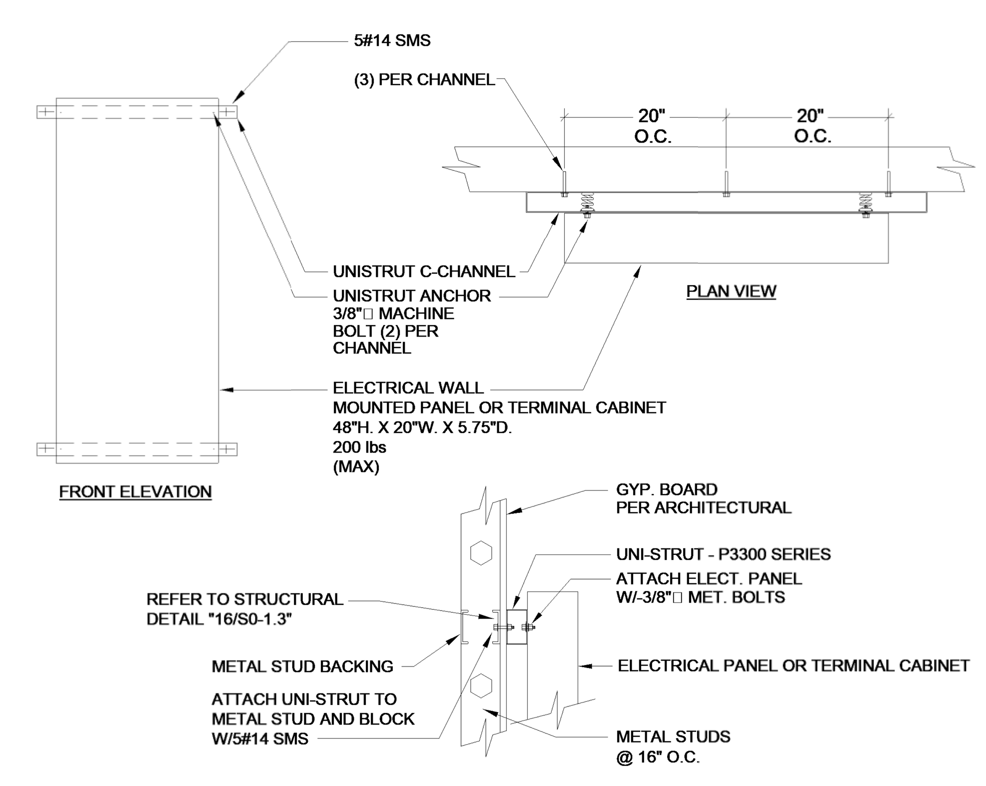

SURFACE MOUNTED ELECTRICAL EQUIPMENT ANCHORAGE
SCALE N.T.S. — 3

IDENTIFICATION STAMP
DIV. OF THE STATE ARCHITECT
APP. 03-119458 INC:
REVIEWED FOR
SS ☑ FLS ☑ ACS ☑
DATE:05/23/2019

DIVISION OF THE STATE ARCHITECT
355 South Grand Avenue, Suite 2100
Los Angeles, CA 90012
ph: (213) 897-3995 fx:(213) 897-3159
agency

architecture planning interiors
tBP/Architecture
4611 Teller Avenue
Newport Beach, CA 92660
ph: 949.673.0300 fx: 949.732.3895
architect

FBAEngineering
Consulting Electrical Engineers
150 Paularino Avenue Suite A120
Costa Mesa, CA 92626
949.852.9995 • 949.852.1657 (fax)
fbaengr.com
FBA Job Number: 212.227
REGISTERED PROFESSIONAL ENGINEER STEPHEN R. ZADECEK No. E 10372 Exp. 09-30-20 ELECTRICAL STATE OF CALIFORNIA
consultant

COMPTON COLLEGE
INSTRUCTIONAL BUILDING No.2
COMPTON COMMUNITY COLLEGE DISTRICT
1111 E. ARTESIA BLVD. COMPTON, CA.
owner

tBP project number: 20998.00
file name:
drawn by: checked by:
date: 04 / 08 / 2019
rev: date: description:

THIS DRAWING AND THE DESIGNS, DEPICTIONS, IDEAS AND OTHER INFORMATION CONTAINED HEREIN CONSTITUTE UNPUBLISHED WORK OF tBP/ARCHITECTURE AND SHALL REMAIN PROPERTY OF tBP/ARCHITECTURE IN PERPETUITY. NO PART THEREOF SHALL BE REPRODUCED, DISCLOSED, DISTRIBUTED, SOLD, PUBLISHED OR OTHERWISE USED IN ANY WAY WITHOUT THE ADVANCED EXPRESS WRITTEN CONSENT OF tBP/ARCHITECTURE.

drawing title:
ELECT. ANCHORAGE DETAILS

drawing
E0-0.5
drawing of

4/8/2019 4:14:25 PM

DETAIL NOTES:

1. IN THE PRECAST CONCRETE PULL BOXES FURNISH AND INSTALL CABLE RACKS ON WALLS INDICATED. EACH RACK SHALL BE EQUIPPED WITH THREE PORCELAIN CABLE HOLDERS ON A VERTICAL STEEL MOUNTING BAR. BOLT HOLES SHALL BE PRE-CAST PULL BOXES JENSEN PRECAST OR EQUAL WITH STAINLESS STEEL FLAT HEAD SCREWS AND SELF CLEANING HOLES. LOOP ALL CABLES AROUND THE LONGEST LENGTH IN THE PULL BOX.

2. PROVIDE NON SLIP COATING ON COVERS.

3. ALL METAL PARTS SHALL BE HOT-DIPPED GALVANIZED AFTER FABRICATION.

4. "BROOKS" YARD BOX OR EQUAL WITH 9 1/2" X 16" I.D. CONCRETE BOX (NO. 3 BODY) WITH 3-TL CAST IRON COVER, UTILITY NAME (ELECTRICAL, SIGNAL, FIRE ALARM, ETC.) EMBOSSED 1/16"ABOVE SURFACE, 1" HIGH UPPERCASE.

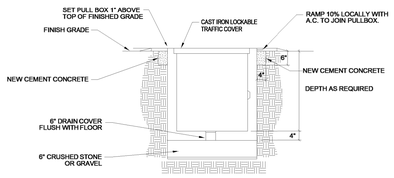

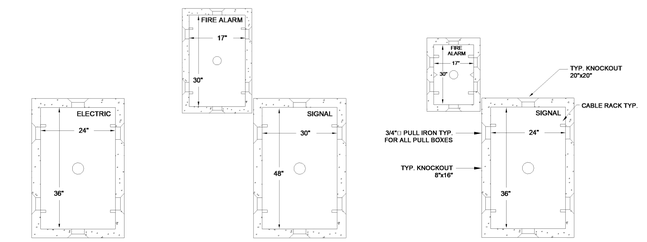

PULLBOX GROUP TYPE "A" | PULLBOX GROUP TYPE "B" | TYPICAL LAYOUT

TYPICAL PRECAST CONCRETE PULLBOX DETAILS

SCALE N.T.S. | 6

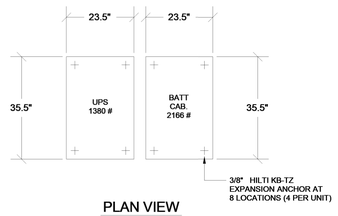

PLAN VIEW

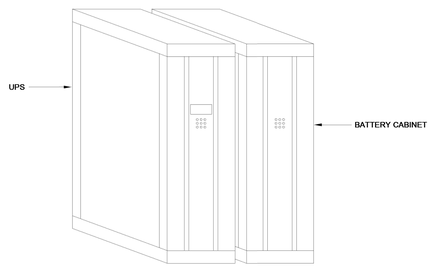

FRONT VIEW

UPS ANCHORAGE DETAIL

SCALE N.T.S. | 5

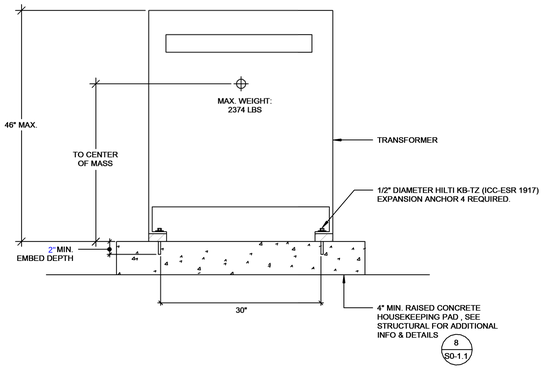

TYPICAL TRANSFORMER ANCHORAGE DETAIL

SCALE N.T.S. | 2

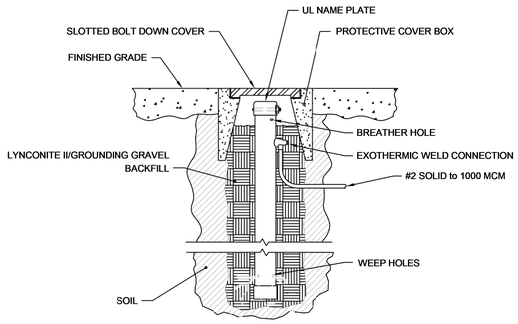

LYNCOLE XIT GROUNDING SYSTEM

STRAIGHT SHAFT MODEL: INFORMATION & SPECIFICATIONS

A. Manufacturer: Lyncole XIT Grounding, 3547 Voyager St., Ste. 204 Torrance, CA 90503, Phone 800-962-2610. www.Lyncole.com

B. Shaft configuration: Straight. Standard lengths: 10', 12', 20' & 40', or custom.

C. UL and CSA Listing: 467.

D. Lynconite II and Grounding Gravel backfill meet ANSI/NSF Enviromental Standard 60.

E. Material: Type K Copper 0.083" nominal wall thickness.

F. Construction: Hollow tube, 2.125" O.D., filled with non-hazardous salts (Calsolyte).

G. Weight: 3.5 lbs per lineal foot.

H. Ground Wire Termination: Exothermic connection to conductors from #2 solid AWG to 1000 MCM. U-bolt with pressure plate provided as test point.

I. Warranty: 30 years. Minimum Life Expectancy: 50 years.

J. Straight Shaft Model No: K2-10CS, K2-12CS, K2-20CS, K2-2-40CS (coupled 20 ft. sections)

K. GSA Contract pricing Available.

CHEMICAL GROUND ROD DETAIL

SCALE N.T.S. | 4

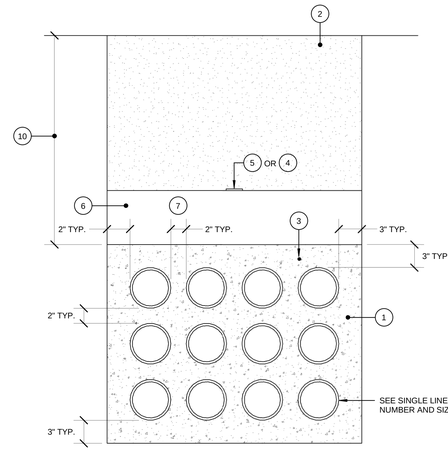

DRAWING SHEET PLAN NOTES

1. CAST-IN PLACE RED MIX CONCRETE CONTINUOUS ENTIRE LENGTH.CONCRETE COVERAGE NOT LESS THAN 3-INCH ALL SIDES OF CONDUIT DUCT BANK.
2. NATIVE SOIL BACKFILL.
3. CONTINUOUS 1#4/0 BARE COPPER DUCT BANK BONDING/GROUND CONDUCTOR.
4. CONTINUOUS 5 INCH CONDUIT AND 4160 VOLT CIRCUIT POWER CONDUCTORS.
5. 3" WIDE WARNING TAPE LOCATED 12" BELOW GRADE. TAPE SHALL INDICATE: "CAUTION BURIED ELECTRICAL CONDUIT".
6. DAMP SAND BACKFILL TO WITHIN 12" OF FINISH GRADE.
7. INTRA-CONDUIT SPACING 2 INCH.
8. HOMERUN AND CONNECT EQUIPMENT BOND CONDUCTOR TO BUILDING EQUIPMENT GROUND BUS - GB.
9. 1"C . - 1#8, CONNECT TO CABLE TRENCH EXPOSED METAL COVER/FRAME FOR CONTINUOUS BOND/GROUND OF EACH ISOLATED METAL COMPONENTS.
10. 36" IN TRAFFIC AREAS, 24" IN NON-TRAFFIC AREAS.

UNDERGROUND CONDUIT DUCT BANK DETAIL

SCALE N.T.S. | 1

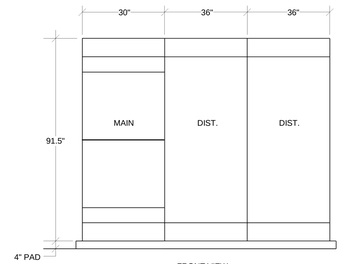

FRONT VIEW

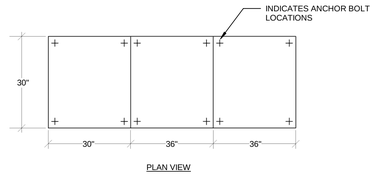

PLAN VIEW

THE DIMENSIONS INDICATED ARE MAXIMUM ALLOWABLE SIZES.

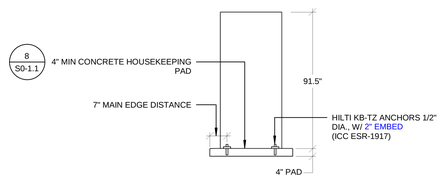

TYPICAL SECTION

DISTRIBUTION SWITCHBOARD ANCHORAGE DETAIL

SCALE N.T.S. | 3

IDENTIFICATION STAMP
DIV. OF THE STATE ARCHITECT
APP. 03-119458 INC:
REVIEWED FOR
SS ☑ FLS ☑ ACS ☑
DATE:05/23/2019

DIVISION OF THE STATE ARCHITECT
355 South Grand Avenue, Suite 2100
Los Angeles, CA 90012
ph: (213) 897-3995 fx:(213) 897-3159

agency

tBP architecture planning interiors

tBP/Architecture
4611 Teller Avenue
Newport Beach, CA 92660
ph: 949.673.0300 fx: 949.732.3895

architect

FBAEngineering
Consulting Electrical Engineers
150 Paularino Avenue Suite A120
Costa Mesa, CA 92626
949.852.0999 • 949.852.1697 (fax)
www.fbaeng.com
FBA Job Number: 212.227

consultant

COMPTON COLLEGE
INSTRUCTIONAL BUILDING No.2
COMPTON COMMUNITY COLLEGE DISTRICT
1111 E. ARTESIA BLVD. COMPTON, CA.

owner

tBP project number: 20998.00
file name:
drawn by: checked by:
date: 04 / 08 / 2019

rev:	date:	description:

THIS DRAWING AND THE DESIGNS, DEPICTIONS, IDEAS AND OTHER INFORMATION CONTAINED HEREIN CONSTITUTE UNPUBLISHED WORK OF tBP/ARCHITECTURE AND SHALL REMAIN PROPERTY OF tBP/ARCHITECTURE IN PERPETUITY. NO PART THEREOF SHALL BE REPRODUCED, DISCLOSED, DISTRIBUTED, SOLD, PUBLISHED OR OTHERWISE USED IN ANY WAY WITHOUT THE ADVANCED EXPRESS WRITTEN CONSENT OF tBP/ARCHITECTURE.

drawing title:
ELECT. ANCHORAGE DETAILS

drawing
E0-0.6
drawing of

4/8/2019 4:14:27 PM

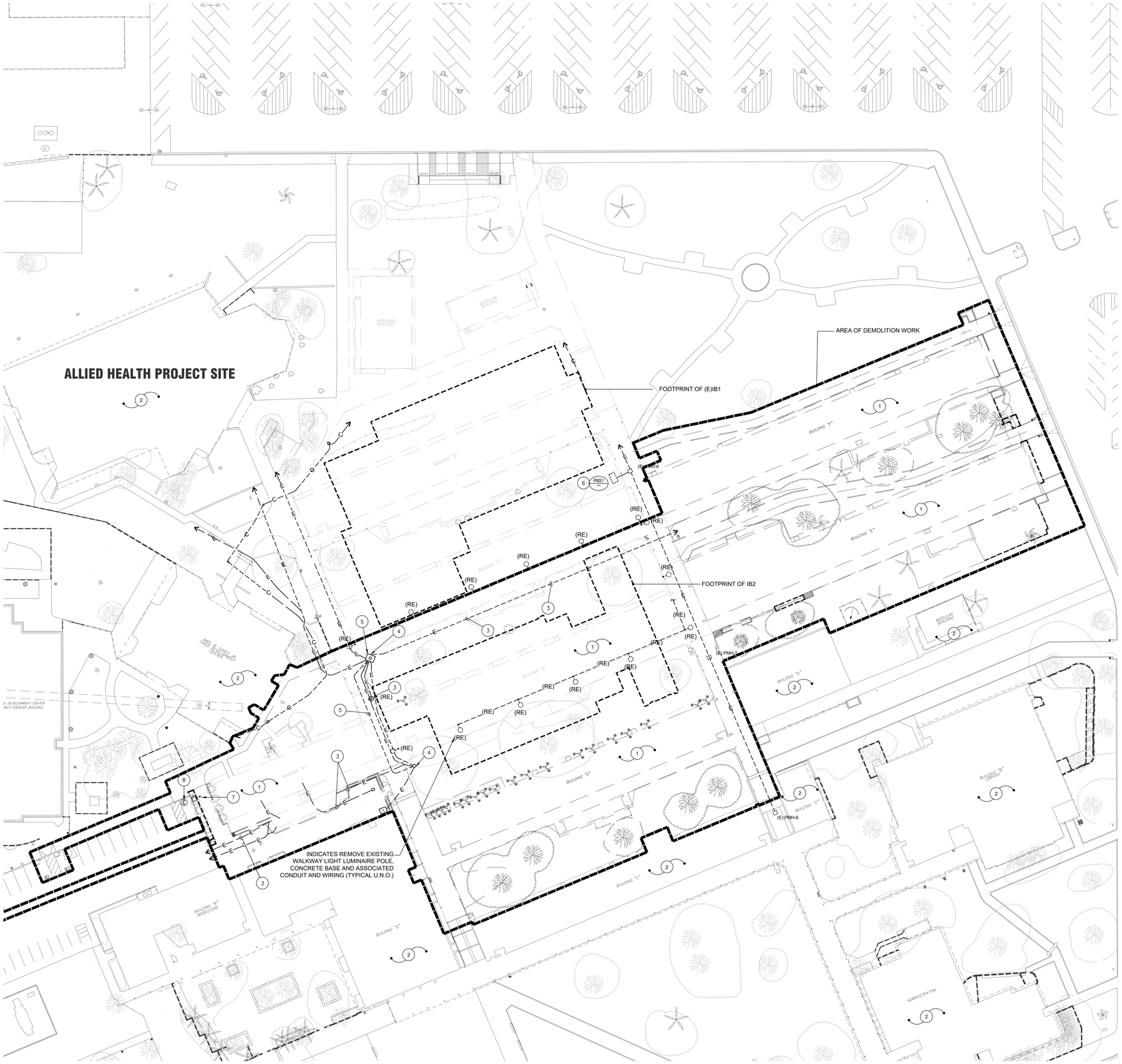

KEY NOTES

1. DISCONNECT AND REMOVE ALL EXISTING ELECTRICAL AND TELECOMMUNICATIONS SYSTEMS FROM BUILDING TO BE DEMOLISHED. ALL ELECTRICAL EQUIPMENT, ETC. DEEMED SALVAGEABLE BY THE DISTRICT SHALL BE RETURNED TO THE DISTRICT AND DEPOSITED AT A LOCATION AS DIRECTED BY THE DISTRICT.

   ELECTRICAL ITEMS TO BE DISCONNECTED AND REMOVED SHALL INCLUDE, BUT NOT LIMITED, TO THE FOLLOWING:

   - SWITCHBOARDS, PANELBOARDS AND ASSOCIATED FEEDERS, CONDUIT AND WIRING.
   - RECEPTACLES, OUTLETS, POWER CONNECTIONS, SAFETY SWITCHES, MOTOR STARTERS, ETC. AND ALL ASSOCIATED CONDUIT AND WIRING.
   - INTERIOR AND EXTERIOR LIGHTING FIXTURES, SWITCHES, OCCUPANCY SENSORS, CONTROLS AND ALL ASSOCIATED CONDUIT AND WIRING.
   - FIRE ALARM CONTROL PANELS, POWER SUPPLIES, SMOKE AND HEAT DETECTORS, PULL STATIONS AND ALL ASSOCIATED CONDUIT AND WIRING.
   - TELECOMMUNICATIONS SYSTEMS INCLUDING IDF EQUIPMENT, TERMINATION DEVICES, SPEAKERS, CLOCKS, ETC. AND ALL ASSOCIATED CONDUIT AND WIRING.

2. EXISTING BUILDING TO REMAIN. PROTECT ALL EXISTING ELECTRICAL, TELECOMMUNICATIONS AND FIRE ALARM SYSTEMS IN PLACE.
3. DISCONNECT AND REMOVE EXISTING UNDERGROUND FEEDER. REMOVE CONDUITS TO MAKE WAY FOR THE NEW CONSTRUCTION..
4. EXISTING MANHOLE TO REMAIN. PROTECT IN PLACE.
5. INTERCEPT EXISTING MV FEEDER IN MANHOLE AND EXTEND NEW FEEDER AS INDICATED.
6. EXISTING HIGH VOLTAGE SWITCH TO REMAIN. PROTECT IN PLACE.
7. DISCONNECT AND REMOVE EXISTING LIGHT POLE INCLUDING LIGHT FIXTURE, CONCRETE BASE, CONDUIT AND CONDUCTORS UP TO SOURCE OF CONNECT.
8. DISCONNECT AND REMOVE EXISTING SECURITY CAMERA. RELOCATE TO NEW LIGHT POLE. SEE SHEET ES-1.3 FOR CONTINUATION.

DEMOLITION PERFORMANCE NOTES

ALL EXISTING ELECTRICAL WITHIN THE DEMOLITION AREAS OF THE SITE SHALL REMAIN UNLESS SPECIFICALLY INDICATED OTHERWISE ON THE ELECTRICAL DRAWINGS. REFER TO ARCHITECTURAL DEMOLITION DRAWINGS INCLUDED IN THIS SET FOR DEMOLITION AREAS. THE SCOPE OF THE DEMOLITION WORK SHALL INCLUDE ALL LABOR, MATERIALS, SERVICES AND EQUIPMENT REQUIRED FOR THE REMOVAL OF ALL EXISTING ELECTRICAL NOT INDICATED AS BEING REUSED. THIS WORK INCLUDES, BUT IS NOT LIMITED TO, THE FOLLOWING:

a. ALL EXISTING WIRE SHALL BE REMOVED FROM CONDUIT.

b. ALL EXISTING CONDUIT, THAT INTERFERES WITH ANY NEW CONSTRUCTION SHALL BE CUT BACK AS REQUIRED TO CLEAR NEW CONSTRUCTION.

c. REMOVE ALL EXISTING EXPOSED CONDUIT, SURFACE RACEWAYS AND CONDUIT CONCEALED IN EXISTING CONSTRUCTION THAT IS TO BE REMOVED. RECONNECT OUTLETS AND LIGHTING FIXTURES WHICH ARE NOW FED THROUGH THE OUTLETS TO BE REMOVED.

d. REMOVE ALL EXPOSED CONDUIT, WIRE, OUTLETS, DISCONNECT SWITCHES AND ELECTRICAL MOUNTING HARDWARE FOR MECHANICAL EQUIPMENT BEING REMOVED. PROVIDE WEATHERPROOF CAPS ON ALL CONDUIT PENETRATING ROOF AND ABANDON CONDUIT. REPAIR ROOFING DAMAGED BY REMOVAL OF EXISTING ELECTRICAL.

e. EXCEPT WHERE EXPOSED CONDUITS ARE SHOWN ON PLANS, INSTALL ALL NEW CONDUITS CONCEALED IN WALLS, FURRED CEILING, OR UNDER FLOOR SPACE.

f. LIGHT FIXTURES AND ELECTRICAL DEVICES INDICATED TO BE REMOVED AND REINSTALLED SHALL BE REMOVED AND PROPERLY STORED TO PROTECT FROM DAMAGE UNTIL SUCH TIME THAT IT IS REINSTALLED. ALL FIXTURES TO BE REINSTALLED SHALL BE FULLY OPERABLE AND SHALL FIRST BE CLEANED, RELAMPED, DEFECTIVE BALLASTS REPLACED AND CRACKED OR BROKEN DIFFUSERS/LENSES REPLACED.

g. ALL REMOVED MATERIALS AND EQUIPMENT WHICH IN THE OPINION OF THE OWNER ARE SALVAGEABLE, SHALL REMAIN THE PROPERTY OF THE OWNER. DELIVER SUCH SALVAGED MATERIALS AND EQUIPMENT ON PREMISES AS DIRECTED, AND NEATLY PILE OR STORE THEM AND PROTECT FROM DAMAGE.

h. DO NOT REUSE SALVAGED MATERIALS AND EQUIPMENT, UNLESS SPECIFICALLY INDICATED ON PLANS OR SPECIFIED. REMOVE FROM PREMISES AND DISPOSE OF ALL MATERIALS CONSIDERED BY THE OWNER TO BE SCRAP.

LEGEND:

- E — EXISTING UNDERGROUND ELECTRICAL CONDUIT AND CABLING
- C — EXISTING UNDERGROUND COMMUNICATIONS CONDUIT AND CABLING

IDENTIFICATION STAMP
DIV. OF THE STATE ARCHITECT
APP. 03-119458 INC:
REVIEWED FOR
SS ☑ FLS ☑ ACS ☑
DATE:05/23/2019

DIVISION OF STATE ARCHITECT
355 South Grand Avenue, Suite 2100
Los Angeles, California. 90012
ph: (213) 897-3995 Fax: (213) 897-3159
agency

tBP
architecture
planning
interiors
tBP/Architecture
4611 Teller Avenue
Newport Beach, CA 92660
ph: 949.673.0300 fx: 949.732.3895
architect

FBA Engineering
Consulting Electrical Engineers
Rancho Santa Margarita, Suite A120
Costa Mesa, CA 92626
949.858.2424 • 949.858.1007 (fax)
fbaengr.com
FBA Job Number 212.227
consultant

COMPTON COLLEGE
INSTRUCTIONAL BUILDING No. 2

COMPTON COMMUNITY COLLEGE DISTRICT
1111 E. ARTESIA BLVD. COMPTON, CA.

owner

tBP project number : 20998.00
file name:
drawn by: checked by:
date: 04/08/2019

Rev:	date:	description:

THIS DRAWING AND THE DESIGNS, DEPICTIONS, IDEAS AND OTHER INFORMATION CONTAINED HEREIN CONSTITUTE UNPUBLISHED WORK OF tBP/ARCHITECTURE AND SHALL REMAIN THE PROPERTY OF tBP/ARCHITECTURE IN PERPETUITY. NO PART THEREOF SHALL BE REPRODUCED, DISCLOSED, DISTRIBUTED, SOLD, PUBLISHED OR OTHERWISE USED IN ANY WAY WITHOUT THE ADVANCED EXPRESS WRITTEN CONSENT OF tBP/ARCHITECTURE.

drawing title:
SITE ELECTRICAL
DEMOLITION PLAN

drawing no.:
ES-1.0
drawing of

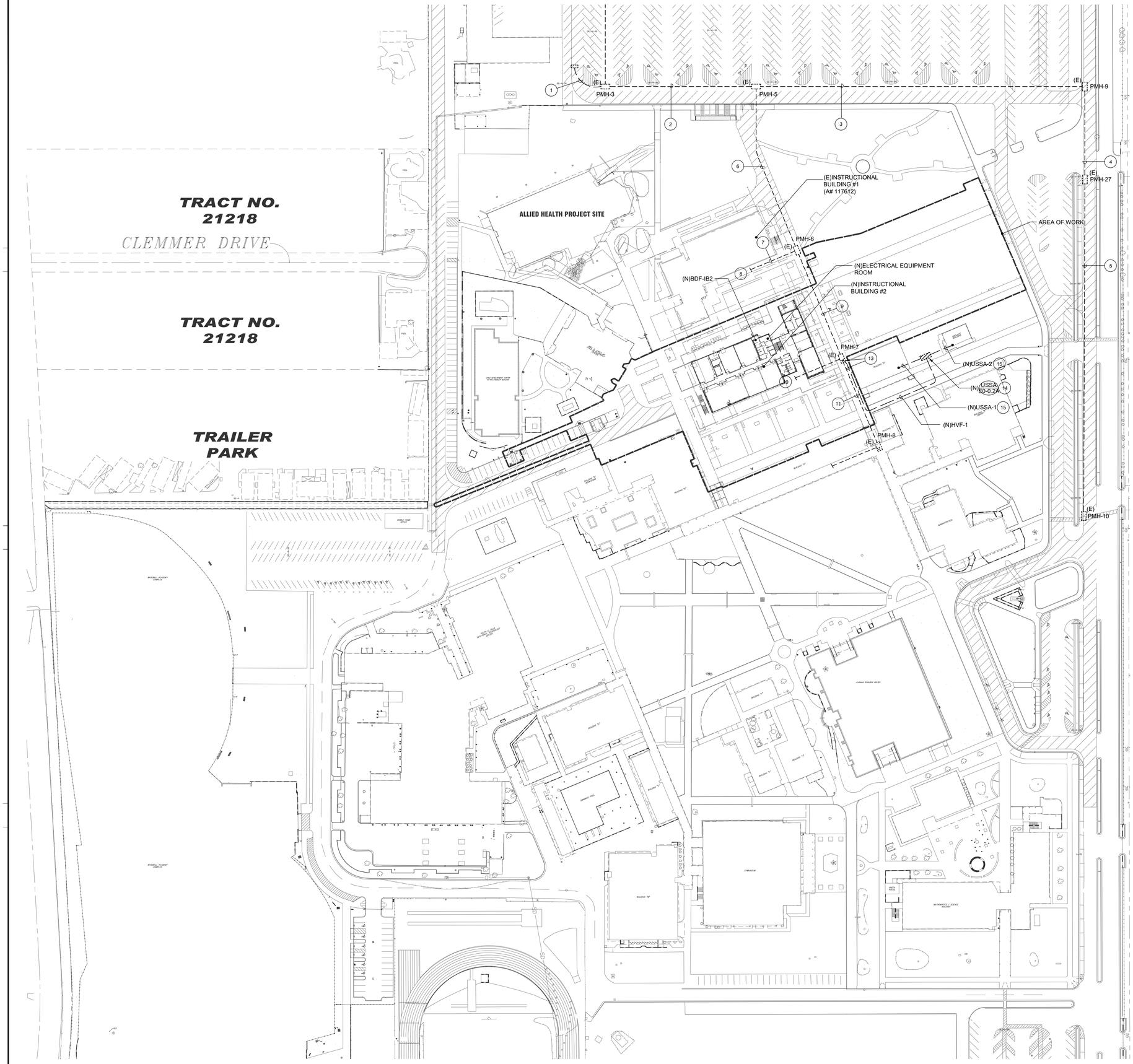

OVERALL SITE ELECTRICAL PLAN

SCALE: 1"=60'

0 15' 30' 60'

NORTH

KEY NOTES

1. EXISTING MV POWER DUCTBANK 3-5"C.
2. EXISTING MV POWER DUCTBANK 4-5"C.
3. EXISTING MV POWER DUCTBANK 4-5"C.
4. EXISTING MV POWER DUCTBANK 4-5"C.
5. EXISTING MV POWER DUCTBANK 3-5"C.
6. EXISTING MV POWER DUCTBANK 1-5"C.
7. EXISTING MV POWER DUCTBANK 3-5"C.
8. EXISTING 2-5" STUB OUTS.
9. EXISTING MV POWER DUCTBANK 4-5"C.
10. EXISTING 2-5" STUB OUTS.
11. EXISTING MV POWER DUCTBANK 2-5"C.
12. EXISTING POWER MANHOLE.
13. INTERCEPT EXISTING 5KV FEEDER IN MANHOLE AND EXTEND AS INDICATED.
14. PROVIDE NEW UNIT SUBSTATION. SEE SHEET E0.2A FOR ADDITIONAL INFORMATION.
15. EXTEND FEEDER FROM UNDERGROUND TO BUILDING WALL. PENETRATE AT BUILDING WALL ABOVE CEILING SPACE AND CONNECT TO BUILDING'S MAIN PANEL.

IDENTIFICATION STAMP
DIV. OF THE STATE ARCHITECT
APP. 03-119458 INC:
REVIEWED FOR
SS ☑ FLS ☑ ACS ☑
DATE:05/23/2019

DIVISION OF STATE ARCHITECT
355 South Grand Avenue, Suite 2100
Los Angeles, California. 90012
ph: (213) 897-3995 Fax: (213) 897-3159
agency

tBP
architecture
planning
interiors

tBP/Architecture
4611 Teller Avenue
Newport Beach, CA 92660
ph: 949.673.0300 fx: 949.732.3895
architect

FBA Engineering
Consulting Electrical Engineers
Address: 1000 Town Center Drive, Suite A-200
Costa Mesa, CA 92626
Phone: (714) ● 966-3522 / (951) ● 600-2888
Fax: (714) ● 966-3521 / (951) ● 600-2889
Email: fba@fbaengr.com
FBA Job Number: 212.227
consultant

COMPTON COLLEGE
INSTRUCTIONAL BUILDING No. 2

COMPTON COMMUNITY COLLEGE DISTRICT
1111 E. ARTESIA BLVD. COMPTON, CA.

owner

tBP project number : 20998.00
file name:
drawn by: checked by:
date: 04/08/2019

Rev:	date:	description:

THIS DRAWING AND THE DESIGNS, DEPICTIONS, IDEAS AND OTHER INFORMATION CONTAINED HEREIN CONSTITUTE UNPUBLISHED WORK OF tBP/ARCHITECTURE AND SHALL REMAIN THE PROPERTY OF tBP/ARCHITECTURE IN PERPETUITY. NO PART THEREOF SHALL BE REPRODUCED, DISCLOSED, DISTRIBUTED, SOLD, PUBLISHED OR OTHERWISE USED IN ANY WAY WITHOUT THE ADVANCED EXPRESS WRITTEN CONSENT OF tBP/ARCHITECTURE.

drawing title:
OVERALL SITE
ELECTRICAL PLAN

drawing no.:
ES-1.1
drawing of

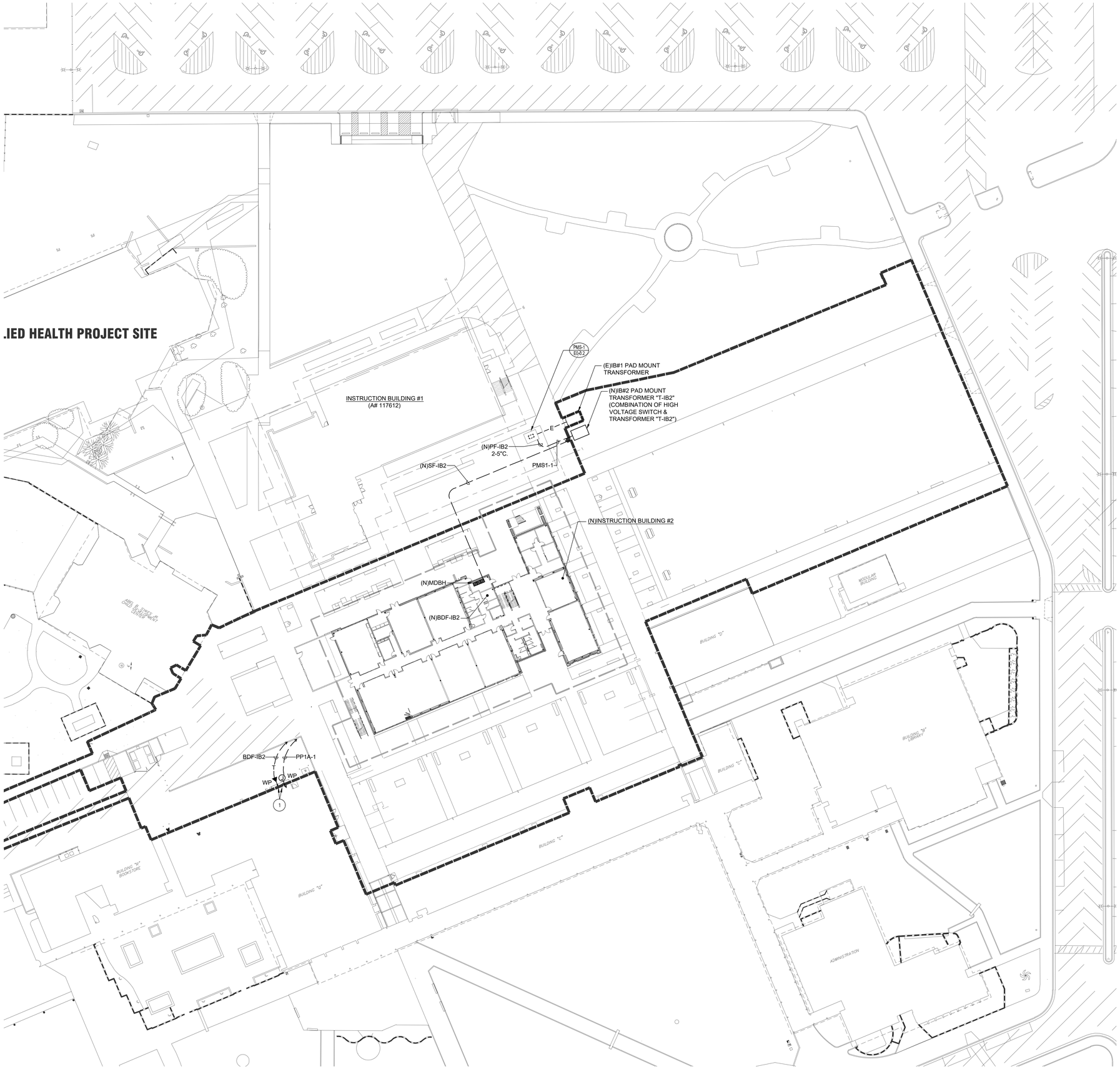

KEY NOTES

1. CONNECT TO IRRIGATION CONTROLLER IN ACCORDANCE WITH THE EQUIPMENT MANUFACTURERS REQUIREMENTS.

SITE PLAN PERFORMANCE NOTES

1. ELECTRICAL CONTRACTOR SHALL EXERCISE EXTREME CAUTION IN EXCAVATING AND TRENCHING ON THIS SITE TO AVOID EXISTING DUCTS, PIPING OR CONDUITS, ETC., AND TO PREVENT HAZARD TO PERSONNEL AND/OR DAMAGE TO EXISTING UNDERGROUND UTILITIES OR STRUCTURES WHETHER OR NOT SHOWN OR DETAILED AND INSTALLED BY THIS OR ANY OTHER CONTRACTS. THE CONTRACTOR SHALL IMMEDIATELY NOTIFY THE DISTRICT SHOULD SUCH UNIDENTIFIED CONDITIONS BE DISCOVERED. THESE DRAWINGS AND SPECIFICATIONS DO NOT INCLUDE NECESSARY COMPONENTS FOR CONSTRUCTION SAFETY.
2. REFER TO CIVIL ENGINEER'S GRADING PLANS FOR NEW GRADES. AT ALL EXISTING TO REMAIN PULLBOXES/VAULTS, ADJUST HEIGHT OF PULLBOX/VAULT COVER TO BE FLUSH WITH NEW GRADE OR FINISHED SURFACE. PROVIDE ADDITIONAL NECKING TO COMPLY WITH THIS PROVISION.
3. ALL NEW AND EXISTING PULLBOX/VAULT COVERS INDICATED ON THESE PLANS, SHALL HAVE A NON-SLIP COATING, JENSEN "TRAX PLATE" OR EQUIVALENT.
4. ALL NEW PULLBOXES SHALL BE AS INDICATED ON 2/E002 AND SPECIFICATIONS.
5. ALL NEW ELECTRICAL/COMMUNICATIONS DUCT BANKS SHALL BE INSTALLED 36" MIN. BELOW FINISH GRADE.
6. ALL NEW AND EXISTING CONDUIT CABLING AND CONDUCTOR RUNS ARE SHOWN DIAGRAMMATICALLY. CONTRACTOR SHALL FIELD VERIFY THE EXISTING CONDITIONS AND PROVIDE ALL CABLING/CONDUCTORS OF SUFFICIENT LENGTH TO MAINTAIN CONTINUITY OF SYSTEMS.

IDENTIFICATION STAMP
DIV. OF THE STATE ARCHITECT
APP. 03-119458 INC:
REVIEWED FOR
SS ☑ FLS ☑ ACS ☑
DATE:05/23/2019

DIVISION OF STATE ARCHITECT
355 South Grand Avenue, Suite 2100
Los Angeles, California. 90012
ph: (213) 897-3995 Fax: (213) 897-3159
agency

tBP
architecture
planning
interiors
tBP/Architecture
4611 Teller Avenue
Newport Beach, CA 92660
ph: 949.673.0300 fx: 949.732.3895
architect

FBA Engineering
Consulting Electrical Engineers
Corporate Office: 1 Jenner, Suite A-200
Costa Mesa, CA 92626
949.852.1800 • 949.852.1697 (fax)
fbaeng.com
FBA Job Number: 212.227
consultant

COMPTON COLLEGE
INSTRUCTIONAL BUILDING No. 2

COMPTON COMMUNITY COLLEGE DISTRICT
1111 E. ARTESIA BLVD. COMPTON, CA.
owner

tBP project number : 20998.00
file name:
drawn by: checked by:
date: 04/08/2019

Rev:	date:	description:

THIS DRAWING AND THE DESIGNS, DEPICTIONS, IDEAS AND OTHER INFORMATION CONTAINED HEREIN CONSTITUTE UNPUBLISHED WORK OF tBP/ARCHITECTURE AND SHALL REMAIN THE PROPERTY OF tBP/ARCHITECTURE IN PERPETUITY. NO PART THEREOF SHALL BE REPRODUCED, DISCLOSED, DISTRIBUTED, SOLD, PUBLISHED OR OTHERWISE USED IN ANY WAY WITHOUT THE ADVANCED EXPRESS WRITTEN CONSENT OF tBP/ARCHITECTURE.

drawing title:
ENLARGED SITE
ELECTRICAL PLAN

drawing no.:
ES-1.2
drawing of

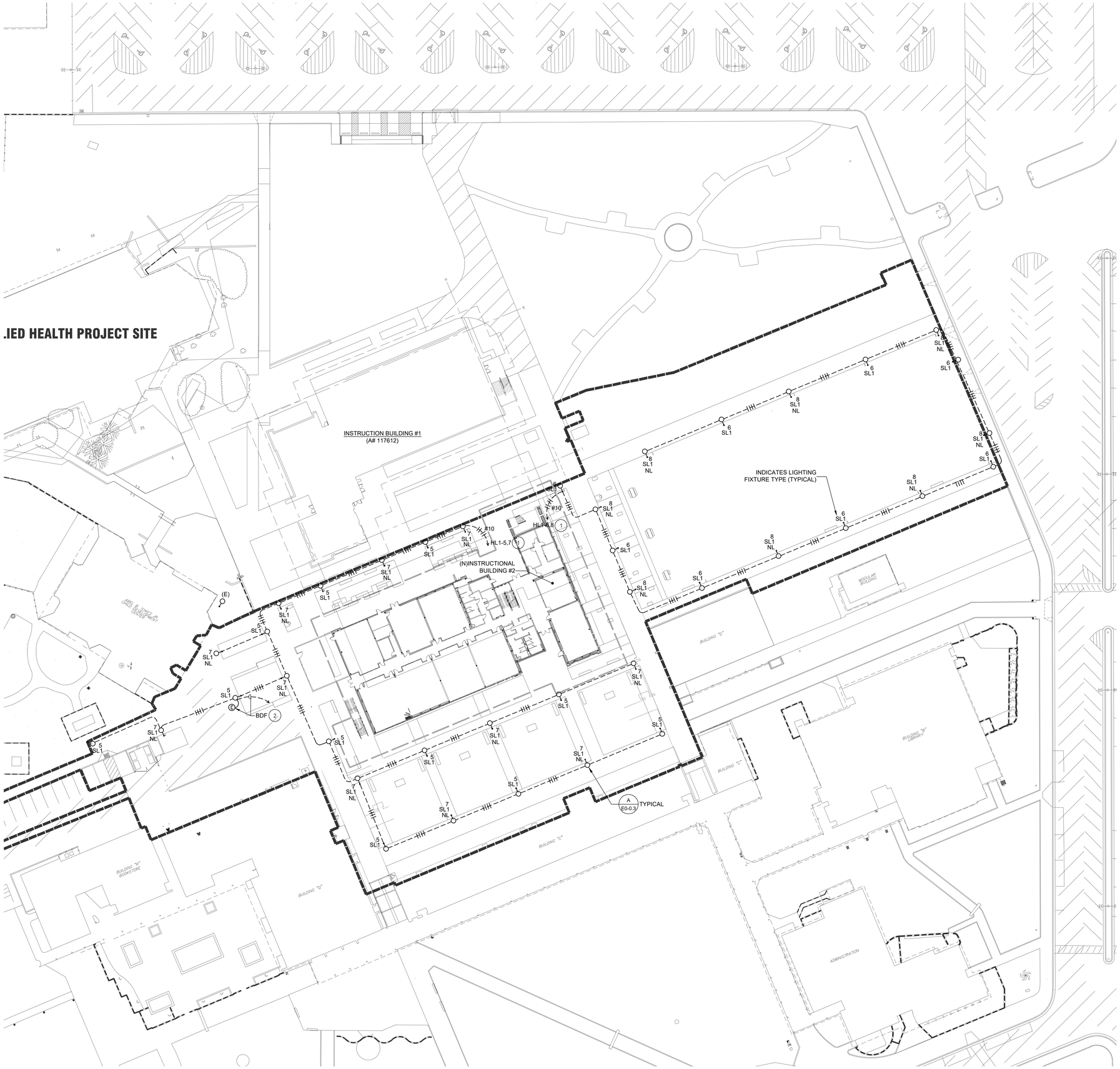

KEY NOTES

1. ROUTE CIRCUITS VIA LIGHTING CONTROL RELAY PANEL "MLCP".
2. INSTALL RELOCATED SECURITY CAMERA FROM REMOVED LIGHT POLE AS PART OF SHEET ES-1.0. EXTEND 1" CONDUIT THROUGH THE POLE AND UNDERGROUND TO BUILDING DATA RACK.

LEGEND:

(E) EXISTING TO REMAIN. PROTECT IN PLACE.

(RE) REMOVE EXISTING LIGHTING FIXTURE, POLE AND CONCRETE BASE AND ASSOCIATED CONDUIT AND WIRING.

IDENTIFICATION STAMP
DIV. OF THE STATE ARCHITECT
APP. 03-119458 INC:
REVIEWED FOR
SS ☑ FLS ☑ ACS ☑
DATE:05/23/2019

DIVISION OF STATE ARCHITECT
355 South Grand Avenue, Suite 2100
Los Angeles, California. 90012
ph: (213) 897-3995 Fax: (213) 897-3159
agency

tBP
architecture
planning
interiors
tBP/Architecture
4611 Teller Avenue
Newport Beach, CA 92660
ph: 949.673.0300 fx: 949.732.3895
architect

FBA Engineering
Consulting Electrical Engineers
Chris Mena, CA 92626
(949) 852-1800 • FAX (949) 852-1801 (fax)
fbaengr.com
FBA Job Number: 212.227
consultant

COMPTON COLLEGE
INSTRUCTIONAL BUILDING No. 2

COMPTON COMMUNITY COLLEGE DISTRICT
1111 E. ARTESIA BLVD. COMPTON, CA.

owner

tBP project number : 20998.00
file name:
drawn by: checked by:
date: 04/08/2019

Rev:	date:	description:

THIS DRAWING AND THE DESIGNS, DEPICTIONS, IDEAS, AND OTHER INFORMATION CONTAINED HEREIN, CONSTITUTE UNPUBLISHED WORK OF tBP/ARCHITECTURE AND SHALL REMAIN THE PROPERTY OF tBP/ARCHITECTURE IN PERPETUITY. NO PART THEREOF SHALL BE REPRODUCED, DISCLOSED, DISTRIBUTED, SOLD, PUBLISHED OR OTHERWISE USED IN ANY WAY WITHOUT THE ADVANCED EXPRESS WRITTEN CONSENT OF tBP/ARCHITECTURE.

drawing title:
ENLARGED SITE
LIGHTING PLAN

drawing no.:
ES-1.3
drawing of

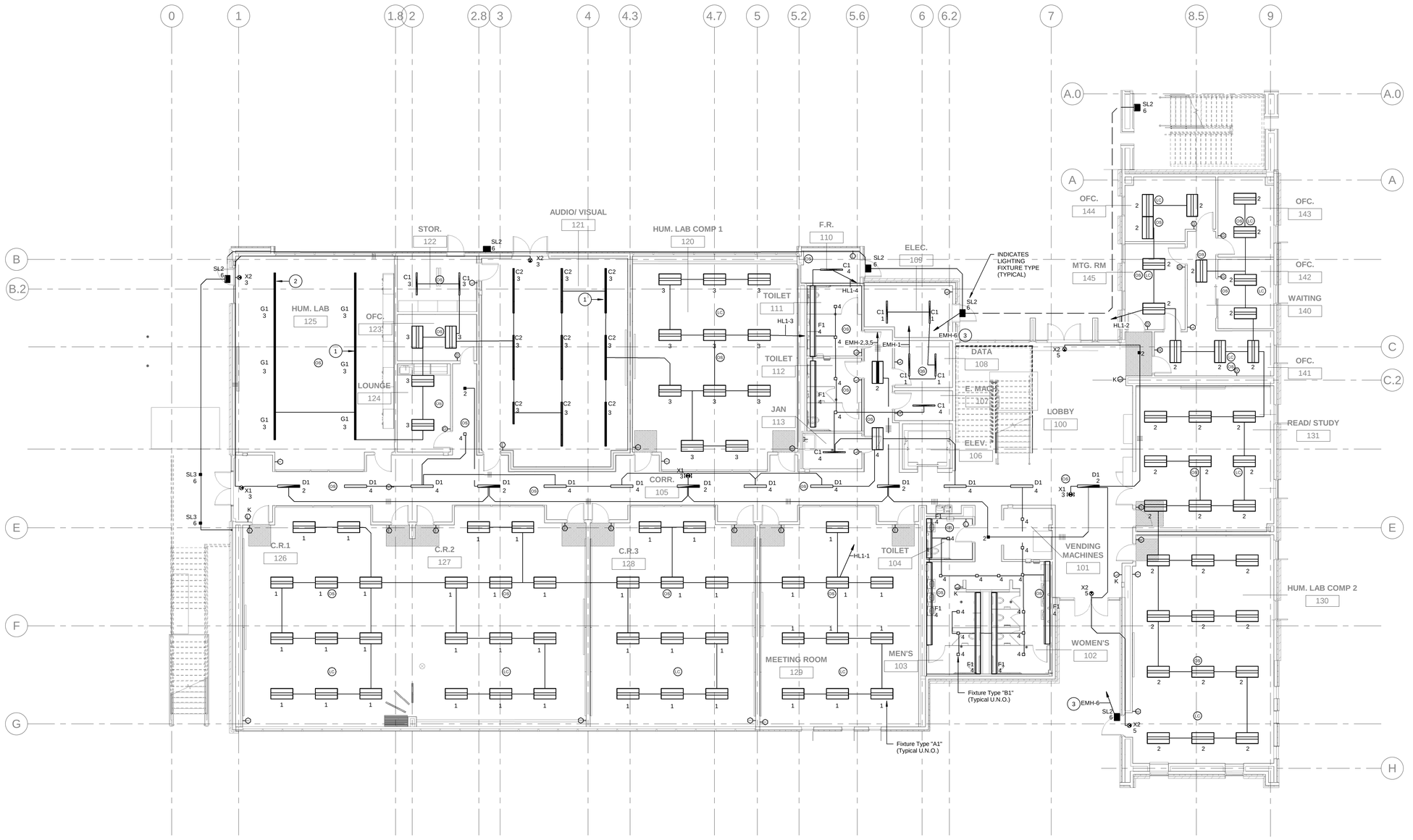

FIRST FLOOR LIGHTING PLAN 1

SCALE 1/8" = 1'-0"

KEY NOTES

1. CHAIN HANG LIGHT FIXTURE AT 12'-0" A.F.F.
2. CABLE SUSPEND BOTTOM OF FIXTURE AT +11'-0".
3. ROUTE VIA LIGHTING CONTROL RELAY PANEL "MLCP".

IDENTIFICATION STAMP
DIV. OF THE STATE ARCHITECT
APP. 03-119458 INC:
REVIEWED FOR
SS ☑ FLS ☑ ACS ☑
DATE:05/23/2019

DIVISION OF THE STATE ARCHITECT
355 South Grand Avenue, Suite 2100
Los Angeles, CA 90012
ph: (213) 897-3995 fx:(213) 897-3159

agency

tBP architecture planning interiors

tBP/Architecture
4611 Teller Avenue
Newport Beach, CA 92660
ph: 949.673.0300 fx: 949.732.3895

architect

FBA Engineering
Consulting Electrical Engineers
150 Pacifica Avenue Suite A120
Costa Mesa, CA 92626
949.852.9995 • 949.852.1697 (fax)
fbaengr.com
FBA Job Number: 212.227

consultant

COMPTON COLLEGE
INSTRUCTIONAL BUILDING No.2

COMPTON COMMUNITY COLLEGE DISTRICT
1111 E. ARTESIA BLVD. COMPTON, CA.

owner

tBP project number: 20998.00
file name:
drawn by: checked by:
date: 04 / 08 / 2019

rev:	date:	description:

THIS DRAWING AND THE DESIGNS, DEPICTIONS, IDEAS AND OTHER INFORMATION CONTAINED HEREIN CONSTITUTE UNPUBLISHED WORK OF tBP/ARCHITECTURE AND SHALL REMAIN PROPERTY OF tBP/ARCHITECTURE IN PERPETUITY. NO PART THEREOF SHALL BE REPRODUCED, DISCLOSED, DISTRIBUTED, SOLD, PUBLISHED OR OTHERWISE USED IN ANY WAY WITHOUT THE ADVANCED EXPRESS WRITTEN CONSENT OF tBP/ARCHITECTURE.

drawing title:
FIRST FLOOR LIGHTING PLAN

drawing
E1-1.1
drawing of

4/8/2019 4:14:35 PM

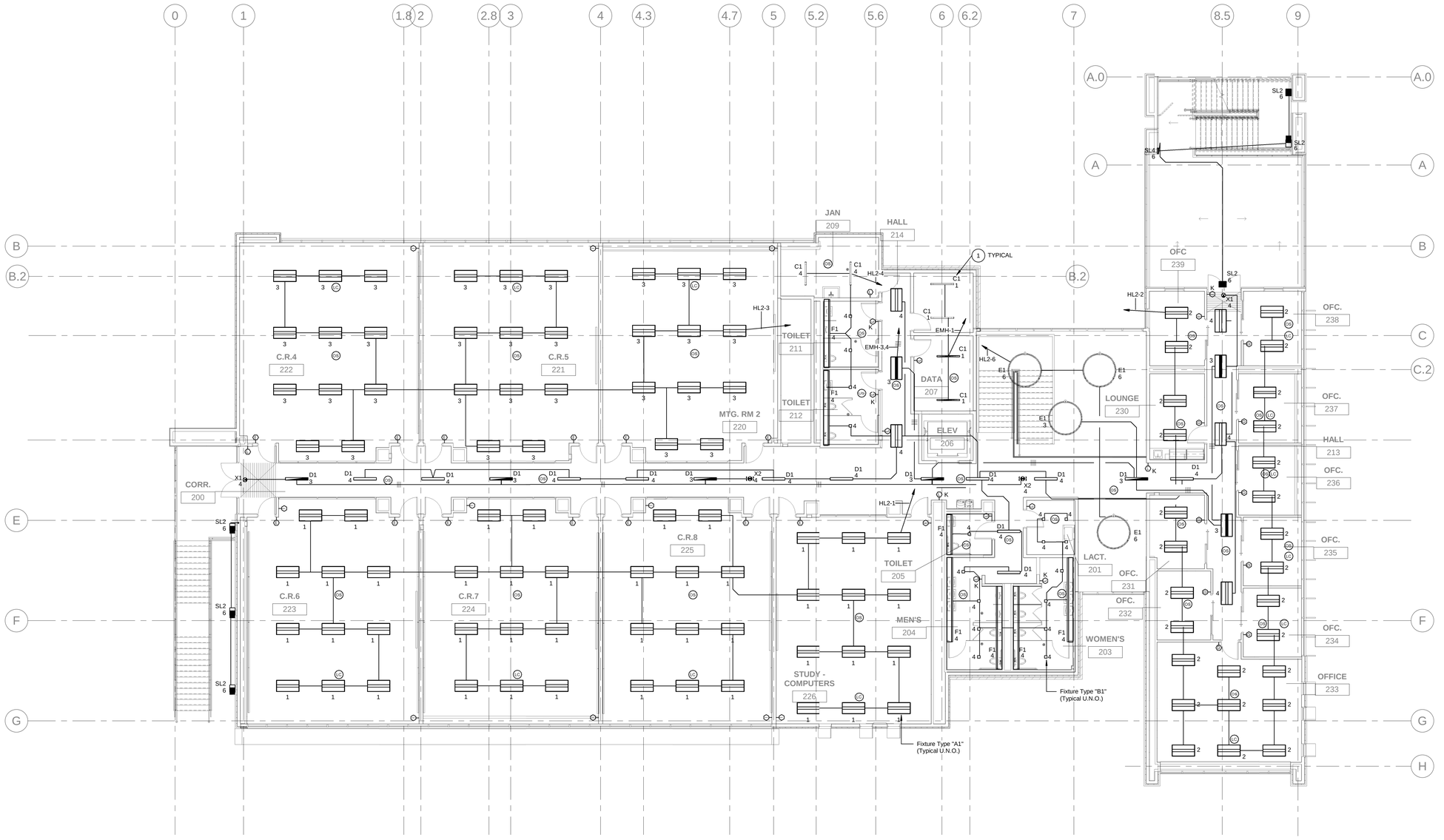

SECOND FLOOR LIGHTING PLAN 1

SCALE 1/8" = 1'-0"

KEY NOTES

1. CHAIN HANG TYPE "C1" LIGHT FIXTURES TO +9'-0" A.F.F.

IDENTIFICATION STAMP
DIV. OF THE STATE ARCHITECT
APP. 03-119458 INC:
REVIEWED FOR
SS ☑ FLS ☑ ACS ☑
DATE:05/23/2019

DIVISION OF THE STATE ARCHITECT
355 South Grand Avenue, Suite 2100
Los Angeles, CA 90012
ph: (213) 897-3995 fx:(213) 897-3159

agency

tBP
architecture
planning
interiors

tBP/Architecture
4611 Teller Avenue
Newport Beach, CA 92660
ph: 949.673.0300 fx: 949.732.3895

architect

FBA Engineering
Consulting Electrical Engineers
150 Paulsen Avenue-Suite A120
Costa Mesa, CA 92626
949.852.9995 • 949.852.1657 (fax)
fbaengr.com
FBA Job Number: 212.227

consultant

COMPTON COLLEGE
INSTRUCTIONAL BUILDING No.2

COMPTON COMMUNITY COLLEGE DISTRICT
1111 E. ARTESIA BLVD. COMPTON, CA.

owner

tBP project number: 20998.00
file name:
drawn by: checked by:
date: 04 / 08 / 2019

rev:	date:	description:

THIS DRAWING AND THE DESIGNS, DEPICTIONS, IDEAS AND OTHER INFORMATION CONTAINED HEREIN CONSTITUTE UNPUBLISHED WORK OF tBP/ARCHITECTURE AND SHALL REMAIN PROPERTY OF tBP/ARCHITECTURE IN PERPETUITY. NO PART THEREOF SHALL BE REPRODUCED, DISCLOSED, DISTRIBUTED, SOLD, PUBLISHED OR OTHERWISE USED IN ANY WAY WITHOUT THE ADVANCED EXPRESS WRITTEN CONSENT OF tBP/ARCHITECTURE.

drawing title:
SECOND FLOOR LIGHTING PLAN

drawing
E1-2.1
drawing of

4/8/2019 4:14:42 PM

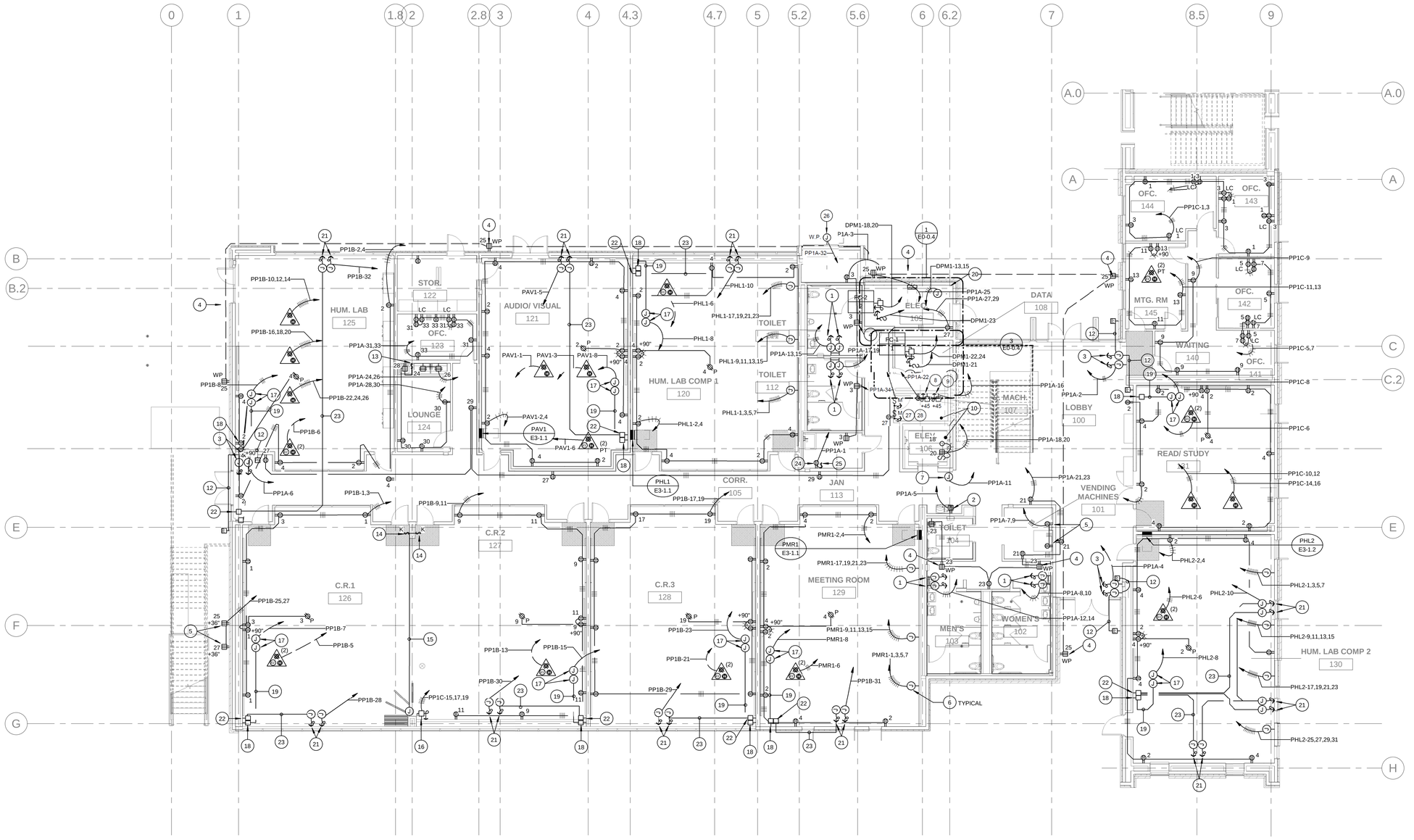

FIRST FLOOR POWER PLAN

SCALE 1/8" = 1'-0" 1

KEY NOTES

16 CONNECT TO MOTOR OPERATED PARTITION IN ACCORDANCE WITH THE EQUIPMENT MANUFACTURERS REQUIREMENTS.

17 CONNECT TO MOTORIZED PROJECTION SCREEN IN ACCORDANCE WITH THE SCREEN MANUFACTURERS REQUIREMENTS.

18 PROVIDE PROJECTION SCREEN CONTROLLER IN FLUSH IN WALL OUTLET BOX, +45°.

19 PROVIDE 3/4"C WITH CONTROL WIRING IN ACCORDANCE WITH THE SCREEN MANUFACTURERS REQUIREMENTS.

20 PROVIDE 20"W X 30"H X 6"D TERMINAL CABINET, SURFACE MOUNTED, FOR HVAC CONTROL TRANSFORMERS. COORDINATE WITH HVAC CONTROLS CONTRACTOR.

21 CONNECT TO MOTOR OPERATED SHADES IN ACCORDANCE WITH THE EQUIPMENT MANUFACTURERS REQUIREMENTS.

22 PROVIDE SHADE CONTROLLER IN FLUSH IN WALL OUTLET BOX, +45°.

23 PROVIDE 3/4"C. WITH CONTROL WIRING IN ACCORDANCE WITH THE SHADE MANUFACTURERS REQUIREMENTS.

24 FOR CONNECTION TO GHW-1.

25 CONNECT TO CP-1 ON ACCORDANCE TO MANUFACTURERS REQUIREMENTS.

26 CONNECT TO FIRE ALARM SPRINKLER BELL IN ACCORDANCE WITH THE MANUFACTURERS REQUIREMENTS. COORDINATE EXACT LOCATION AND HEIGHT PRIOR TO ROUGH-IN.

27 PROVIDE 120V POWER CONNECTION TO FIRE SMOKE DAMPERS. INSTALL IN ACCORDANCE WITH EQUIPMENT MANUFACTURERS REQUIREMENTS.

28 ROUTE SMOKE FIRE DAMPER POWER THRU FIRE ALARM CONTROL MODULE.

1 CONNECT TO ELECTRIC HAND DRYERS IN ACCORDANCE WITH THE EQUIPMENT MANUFACTURERS REQUIRMENT.

2 CONNECT TO ELECTRIC WATER COOLER IN ACCORDANCE WITH THE EQUIPMENT MANUFACTURERS REQUIRMENTS.

3 CONNECT TO POWER ASSISTED DOOR IN ACCORDANCE WITH THE EQUIPMENT MANUFACTURERS REQUIRMENTS.

4 INSTALL GFCI TYPE RECEPTACLE IN FLUSH IN WALL LOCKING BOX, PASS AND SEYMOUR #4600 SERIES OR EQUAL BY COLE, +18" .

5 FOR CONNECTION TO VENDING MACHINES.

6 FOR CONNECTION TO POWERED COMPUTER FURNITURE SYSTEM.

7 CONNECT TO ELEVATOR SMOKE GUARD SYSTEM IN ACCORDANCE WITH THE EQUIPMENT MANUFACTURER'S REQUIREMENTS.

8 CONNECT TO ELEVATOR CONTROLLER IN ACCORDANCE WITH THE ELEVATOR MANUFACTURER'S REQUIREMENTS.

9 CONNECT TO ELEVATOR CAB LIGHTS, FANS, ETC. IN ACCORDANCE WITH THE ELEVATOR MANUFACTURER'S REQUIREMENTS.

10 LOCATE ALL ELECTRICAL ITEMS IN THE ELEVATOR MACHINE ROOM AND PIT IN ACCORDANCE WITH THE ELEVATOR MANUFACTURER'S SHOP DRAWINGS.

11 SEE SINGLE LINE DIAGRAM SHEET E0-0.2 FOR FEEDER REQUIREMENTS.

12 PROVIDE 3/4"C. WITH CONTROL WIRING IN ACCORDANCE WITH THE DOOR MANUFACTURERS REQUIREMENTS.

13 ENGRAVE SWITCH COVERPLATE TO READ; "DISPOSAL"

14 ENGRAVE SWITCH COVERPLATE TO READ; "PARTITION"

15 PROVIDE 3/4"C. WITH CONTROL WIRING IN ACCORDANCE WITH THE PARTITION MANUFACTUERES REQUIREMENTS.

THIS DRAWING AND THE DESIGNS, IDEAS AND DRAWINGS CONTAINED HEREIN CONSTITUTE UNPUBLISHED WORK OF tBP/ARCHITECTURE AND SHALL REMAIN PROPERTY OF tBP/ARCHITECTURE IN PERPETUITY. NO PART THEREOF SHALL BE REPRODUCED, DISCLOSED, DISTRIBUTED, SOLD, PUBLISHED OR OTHERWISE USED IN ANY WAY WITHOUT THE ADVANCED EXPRESS WRITTEN CONSENT OF tBP/ARCHITECTURE.

4/8/2019 4:14:50 PM

IDENTIFICATION STAMP
DIV. OF THE STATE ARCHITECT
APP. 03-119458 INC:
REVIEWED FOR
SS ☑ FLS ☑ ACS ☑
DATE:05/23/2019

DIVISION OF THE STATE ARCHITECT
355 South Grand Avenue, Suite 2100
Los Angeles, CA 90012
ph: (213) 897-3995 fx:(213) 897-3159
agency

tBP architecture planning interiors
tBP/Architecture
4611 Teller Avenue
Newport Beach, CA 92660
ph: 949.673.0300 fx: 949.732.3895
architect

FBAEngineering
Consulting Electrical Engineers
150 Paularino Avenue Suite A120
Costa Mesa, California 92626
949.852.0999 * 949.852.1697 (fax)
fba@fbaeng.com
FBA Job Number: 212.227
consultant

COMPTON COLLEGE
INSTRUCTIONAL BUILDING No.2
COMPTON COMMUNITY COLLEGE DISTRICT
1111 E. ARTESIA BLVD. COMPTON, CA.
owner

tBP project number: 20998.00
file name:
drawn by: checked by:
date: 04 / 08 / 2019

rev:	date:	description:

drawing title:
FIRST FLOOR POWER PLAN

drawing
E2-1.1
drawing of

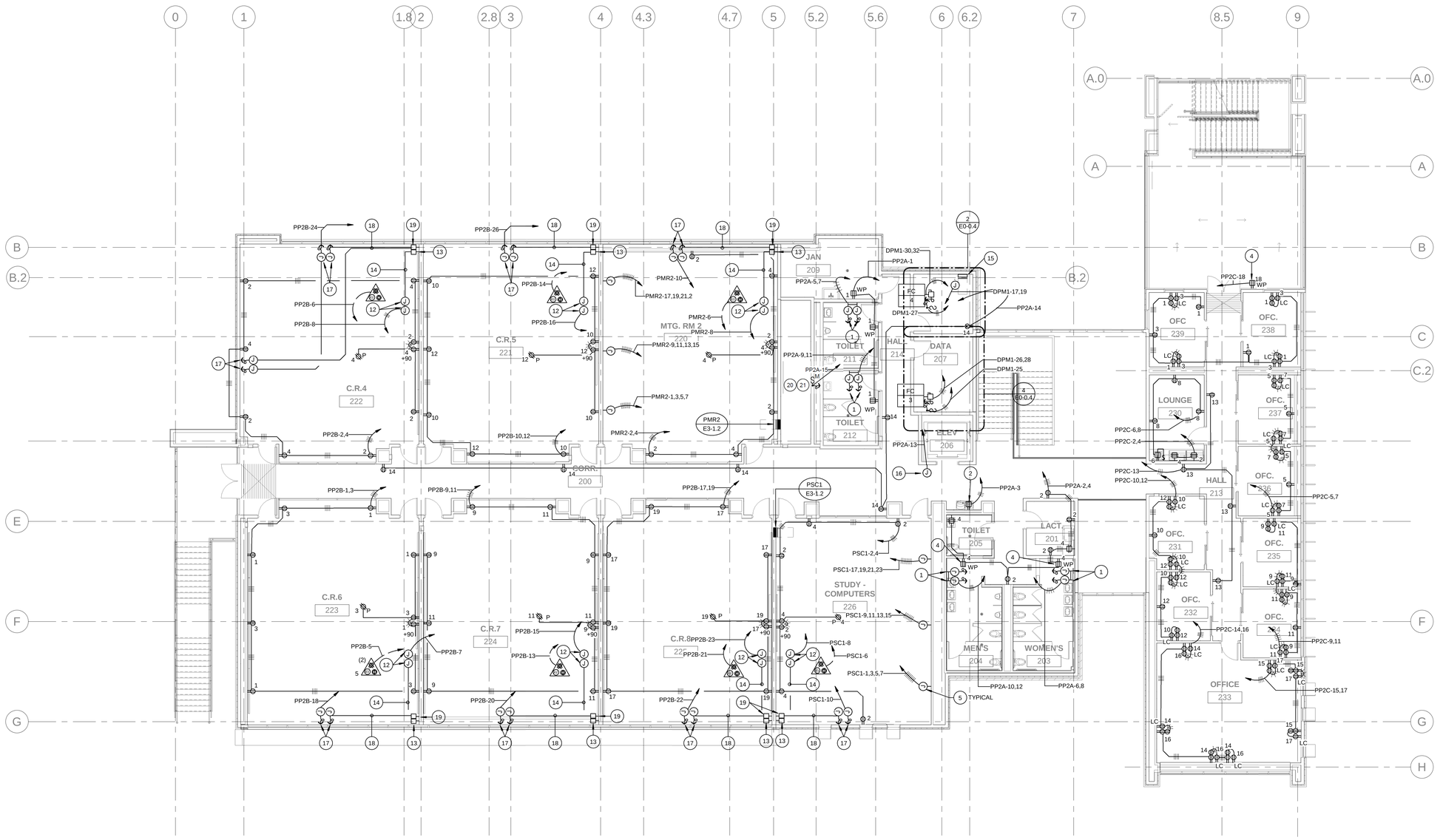

SECOND FLOOR POWER PLAN

SCALE 1/8" = 1'-0" (1)

KEY NOTES

16 CONNECT AREA OF REFUGE TWO WAY COMMUNICATION DEVICE IN ACCORDANCE WITH THE EQUIPMENT MANUFACTURERS REQUIREMENTS.

17 CONNECT TO MOTOR OPERATED SHADES IN ACCORDANCE WITH THE EQUIPMENT MANUFACTURERS REQUIREMENTS.

18 PROVIDE 3/4"C. WITH CONTROL WIRING IN ACCORDANCE WITH THE SHADE MANUFACTURERS REQUIREMENTS.

19 PROVIDE SHADE CONTROLLER IN FLUSH IN WALL OUTLET BOX, +45".

20 PROVIDE 120V POWER CONNECTION TO FIRE SMOKE DAMPER. INSTALL IN ACCORDANCE WITH EQUIPMENT MANUFACTURERS REQUIREMENTS.

21 ROUTE FIRE SMOKE DAMPER POWER THRU FIRE ALARM CONTROL MODULE.

1 CONNECT TO ELECTRIC HAND DRYERS IN ACCORDANCE WITH THE EQUIPMENT MANUFACTURERS REQUIRMENT.

2 CONNECT TO ELECTRIC WATER COOLER IN ACCORDANCE WITH THE EQUIPMENT MANUFACTURERS REQUIRMENTS.

3 CONNECT TO POWER ASSISTED DOOR IN ACCORDANCE WITH THE EQUIPMENT MANUFACTURERS REQUIRMENTS.

4 INSTALL GFCI TYPE RECEPTACLE IN FLUSH IN WALL LOCKING BOX, PASS AND SEYMOUR #4600 SERIES OR EQUAL BY COLE, +18" .

5 FOR CONNECTION TO POWERED COMPUTER FURNITURE SYSTEM.

6 SEE SINGLE LINE DIAGRAM SHEET E0-0.2 FOR FEEDER REQUIREMENTS.

7 PROVIDE 3/4"C. WITH CONTROL WIRING IN ACCORDANCE WITH THE DOOR MANUFACTURERS REQUIREMENTS.

8 ENGRAVE SWITCH COVERPLATE TO READ: "DISPOSAL"

9 ENGRAVE SWITCH COVERPLATE TO READ; "PARTITION"

10 PROVIDE 3/4"C. WITH CONTROL WIRING IN ACCORDANCE WITH THE PARTITION MANUFACTUERES REQUIREMENTS.

11 CONNECT TO MOTOR OPERATED PARTITION IN ACCORDANCE WITH THE EQUIPMENT MANUFACTURERS REQUIREMENTS.

12 CONNECT TO MOTORIZED PROJECTION SCREEN IN ACCORDANCE WITH THE SCREEN MANUFACTURERS REQUIREMENTS.

13 PROVIDE PROJECTION SCREEN CONTROLLER IN FLUSH IN WALL OUTLET BOX, +45".

14 PROVIDE 3/4"C WITH CONTROL WIRING IN ACCORDANCE WITH THE SCREEN MANUFACTUREERES REQUIREMENTS.

15 PROVIDE 20"W X 30"H X 6"D TERMINAL CABINET, SURFACE MOUNTED, FOR HVAC CONTROL TRANSFORMERS. COORDINATE WITH HVAC CONTROLS CONTRACTOR.

4/8/2019 4:14:57 PM

IDENTIFICATION STAMP
DIV. OF THE STATE ARCHITECT
APP. 03-119458 INC:
REVIEWED FOR
SS ☑ FLS ☑ ACS ☑
DATE:05/23/2019

DIVISION OF THE STATE ARCHITECT
355 South Grand Avenue, Suite 2100
Los Angeles, CA 90012
ph: (213) 897-3995 fx:(213) 897-3159

agency

tBP
architecture
planning
interiors

tBP/Architecture
4611 Teller Avenue
Newport Beach, CA 92660
ph: 949.673.0300 fx: 949.732.3895

architect

FBAEngineering
Consulting Electrical Engineers
150 Paularino Avenue Suite A120
Costa Mesa, CA 92626
949.852.0999 • 949.852.1667 (fax)
fbainc.com
FBA Job Number: 212.227

consultant

COMPTON COLLEGE
INSTRUCTIONAL BUILDING No.2

COMPTON COMMUNITY COLLEGE DISTRICT
1111 E. ARTESIA BLVD. COMPTON, CA.

owner

tBP project number: 20998.00
file name:
drawn by: checked by:
date: 04 / 08 / 2019

rev:	date:	description:

THE DRAWINGS AND THE WRITTEN, GRAPHICAL, PICTORIAL, VIDEO, AND OTHER INFORMATION CONTAINED HEREIN CONSTITUTE UNPUBLISHED WORK OF tBP/ARCHITECTURE AND SHALL REMAIN PROPERTY OF tBP/ARCHITECTURE IN PERPETUITY. NO PART THEREOF SHALL BE REPRODUCED, DISCLOSED, DISTRIBUTED, SOLD, PUBLISHED OR OTHERWISE USED IN ANY WAY WITHOUT THE ADVANCED EXPRESS WRITTEN CONSENT OF tBP/ARCHITECTURE.

drawing title:
SECOND FLOOR POWER PLAN

drawing
E2-2.1
drawing of

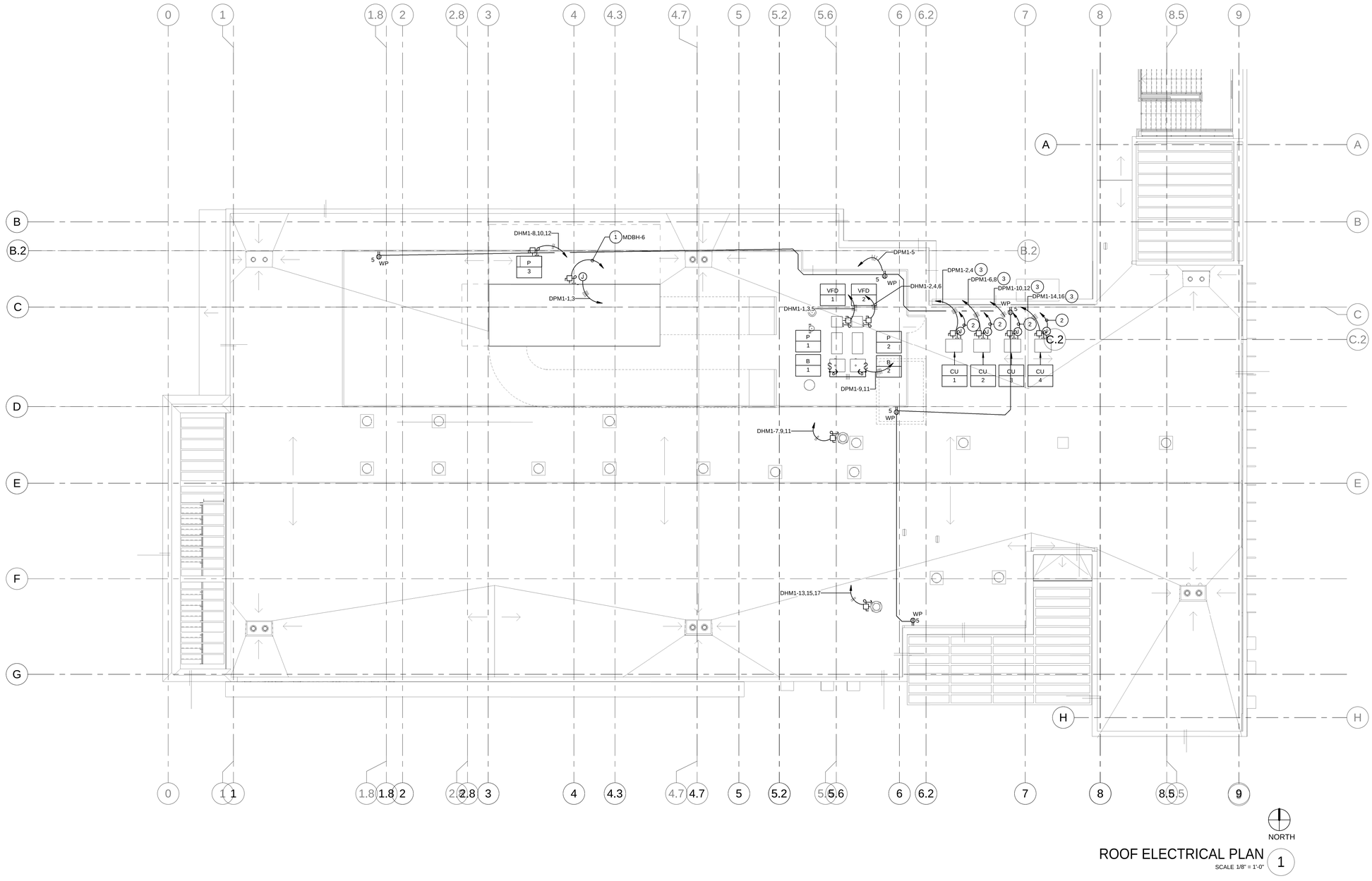

ROOF ELECTRICAL PLAN 1

SCALE 1/8" = 1'-0"

KEY NOTES

1. SEE SINGLE LINE DIAGRAM FOR FEEDER REQUIREMENTS.
2. PROVIDE 3/4"C. WITH CONTROL WIRING TO INDOOR FAN COIL UNIT.
3. PROVIDE 2#10, 1#10 GRD. - 3/4"C.

IDENTIFICATION STAMP
DIV. OF THE STATE ARCHITECT
APP. 03-119458 INC:
REVIEWED FOR
SS ☑ FLS ☑ ACS ☑
DATE:05/23/2019

DIVISION OF THE STATE ARCHITECT
355 South Grand Avenue, Suite 2100
Los Angeles, CA 90012
ph: (213) 897-3995 fx:(213) 897-3159

agency

tBP architecture planning interiors

tBP/Architecture
4611 Teller Avenue
Newport Beach, CA 92660
ph: 949.673.0300 fx: 949.732.3895

architect

FBA Engineering
Consulting Electrical Engineers
150 Palatino Avenue Suite A120
Costa Mesa, CA 92626
949.852.9995 • 949.852.1657 (fax)
fbaengr.com
FBA Job Number: 212.227

consultant

COMPTON COLLEGE
INSTRUCTIONAL BUILDING No.2

COMPTON COMMUNITY COLLEGE DISTRICT
1111 E. ARTESIA BLVD. COMPTON, CA.

owner

tBP project number: 20998.00
file name:
drawn by: checked by:
date: 04 / 08 / 2019

rev:	date:	description:

THIS DRAWING AND THE DESIGNS, DEPICTIONS, IDEAS AND OTHER INFORMATION CONTAINED HEREIN CONSTITUTE UNPUBLISHED WORK OF tBP/ARCHITECTURE AND SHALL REMAIN PROPERTY OF tBP/ARCHITECTURE IN PERPETUITY. NO PART THEREOF SHALL BE REPRODUCED, DISCLOSED, DISTRIBUTED, SOLD, PUBLISHED OR OTHERWISE USED IN ANY WAY WITHOUT THE ADVANCED EXPRESS WRITTEN CONSENT OF tBP/ARCHITECTURE.

drawing title:
ELECTRICAL ROOF PLAN

drawing
E2-2.2
drawing of

4/8/2019 4:15:02 PM

Branch Panel: PMR1

INSTRUCTIONAL BUILDING NO. 2

Location: MEETING ROOM-1 129-1 | **Supply From:** | **Mounting:** FLUSH
Volts: 120/208 Wye | **Phases:** 3 | **Wires:** 4 | **Isolated Ground Bus:**
A.I.C. Rating: | **Mains Type:** | **Mains Rating:** 100 A | **MCB Rating:** 225 A

CKT	Circuit Description	Quan	Trip	Pole	A		B		C		Pole	Trip	Quan	Circuit Description	CKT
1	MEETING ROOM COMPUTERS	1	20 A	1	1600...	900 VA					1	20 A	5	MEETING ROOM RECEPTACLES	2
3	MEETING ROOM COMPUTERS	1	20 A	1			1600...	720 VA			1	20 A	4	MEETING ROOM RECEPTACLES	4
5	MEETING ROOM COMPUTERS	1	20 A	1					1600...	500 VA	1	20 A	1	MEETING ROOM LECTERN	6
7	MEETING ROOM COMPUTERS	1	20 A	1	1600...	800 VA					1	20 A	1	MEETING ROOM PROJ. SCREEN	8
9	MEETING ROOM COMPUTERS	1	20 A	1			1600...	0 VA			1	20 A	--	Spare	10
11	MEETING ROOM COMPUTERS	1	20 A	1					1600...	0 VA	1	20 A	--	Spare	12
13	MEETING ROOM COMPUTERS	1	20 A	1	1600...	0 VA					1	20 A	--	Spare	14
15	MEETING ROOM COMPUTERS	1	20 A	1			1600...	0 VA			1	20 A	--	Spare	16
17	MEETING ROOM COMPUTERS	1	20 A	1					1600...	0 VA	1	20 A	--	Spare	18
19	MEETING ROOM COMPUTERS	1	20 A	1	1600...	0 VA					1	20 A	--	Spare	20
21	MEETING ROOM COMPUTERS	1	20 A	1			1600...	0 VA			1	20 A	--	Spare	22
23	MEETING ROOM COMPUTERS	1	20 A	1					1600...	0 VA	1	20 A	--	Spare	24
25	Provision	--	--	--	0 VA	0 VA					--	--	--	Provision	26
27	Provision	--	--	--			0 VA	0 VA			--	--	--	Provision	28
29	Provision	--	--	--					0 VA	0 VA	--	--	--	Provision	30
31	Provision	--	--	--	0 VA	0 VA					--	--	--	Provision	32
33	Provision	--	--	--			0 VA	0 VA			--	--	--	Provision	34
35	Provision	--	--	--					0 VA	0 VA	--	--	--	Provision	36
37	Provision	--	--	--	0 VA	0 VA					--	--	--	Provision	38
39	Provision	--	--	--			0 VA	0 VA			--	--	--	Provision	40
41	Provision	--	--	--					0 VA	0 VA	--	--	--	Provision	42
				Total Load:	8100 VA		7120 VA		6900 VA						
				Total Amps:	68 A		60 A		58 A						

Legend:

Load Classification	Connected Load	Demand Factor	Estimated Demand	Panel Totals	
Other	9600 VA	100.00%	9600 VA		
Power	10400 VA	100.00%	10400 VA	Total Conn. Load:	22120 VA
Receptacle	2120 VA	100.00%	2120 VA	Total Est. Demand:	22120 VA
				Total Conn.:	61 A
				Total Est. Demand:	61 A

Notes:

Branch Panel: PAV1

INSTRUCTIONAL BUILDING NO. 2

Location: AUDIO/ VISUAL 121 | **Supply From:** | **Mounting:** FLUSH
Volts: 120/208 Wye | **Phases:** 3 | **Wires:** 4 | **Isolated Ground Bus:**
A.I.C. Rating: | **Mains Type:** | **Mains Rating:** 100 A | **MCB Rating:** 225 A

CKT	Circuit Description	Quan	Trip	Pole	A		B		C		Pole	Trip	Quan	Circuit Description	CKT
1	AV FLOOR BOXES	1	20 A	1	720 VA	1080...					1	20 A	6	AV CONV. RECEPTACLES	2
3	AV FLOOR BOXES	1	20 A	1			720 VA	1080...			1	20 A	6	AV CONV. RECEPTACLES	4
5	Motor Operated Shade AUDIO/ VISUAL 121	1	20 A	1					500 VA	540 VA	1	20 A	1	AV LECTERN	6
7	Spare	--	20 A	1	0 VA	800 VA					1	20 A	1	AV PROJ. SCREEN	8
9	Spare	--	20 A	1			0 VA	0 VA			1	20 A	--	Spare	10
11	Spare	--	20 A	1					0 VA	0 VA	1	20 A	--	Spare	12
13	Spare	--	20 A	1	0 VA	0 VA					1	20 A	--	Spare	14
15	Spare	--	20 A	1			0 VA	0 VA			1	20 A	--	Spare	16
17	Spare	--	20 A	1					0 VA	0 VA	1	20 A	--	Spare	18
19	Spare	--	20 A	1	0 VA	0 VA					1	20 A	--	Spare	20
21	Spare	--	20 A	1			0 VA	0 VA			1	20 A	--	Spare	22
23	Spare	--	20 A	1					0 VA	0 VA	1	20 A	--	Spare	24
25	Provision	--	--	--	0 VA	0 VA					--	--	--	Provision	26
27	Provision	--	--	--			0 VA	0 VA			--	--	--	Provision	28
29	Provision	--	--	--					0 VA	0 VA	--	--	--	Provision	30
31	Provision	--	--	--	0 VA	0 VA					--	--	--	Provision	32
33	Provision	--	--	--			0 VA	0 VA			--	--	--	Provision	34
35	Provision	--	--	--					0 VA	0 VA	--	--	--	Provision	36
37	Provision	--	--	--	0 VA	0 VA					--	--	--	Provision	38
39	Provision	--	--	--			0 VA	0 VA			--	--	--	Provision	40
41	Provision	--	--	--					0 VA	0 VA	--	--	--	Provision	42
				Total Load:	2600 VA		1800 VA		1040 VA						
				Total Amps:	23 A		16 A		9 A						

Legend:

Load Classification	Connected Load	Demand Factor	Estimated Demand	Panel Totals	
Power	1300 VA	100.00%	1300 VA		
Receptacle	4140 VA	100.00%	4140 VA	Total Conn. Load:	5440 VA
				Total Est. Demand:	5440 VA
				Total Conn.:	15 A
				Total Est. Demand:	15 A

Notes:

Branch Panel: HL1

INSTRUCTIONAL BUILDING NO. 2

Location: Space 397 | **Supply From:** | **Mounting:** Surface
Volts: 480/277 Wye | **Phases:** 3 | **Wires:** 4 | **Isolated Ground Bus:**
A.I.C. Rating: | **Mains Type:** | **Mains Rating:** 100 A | **MCB Rating:** 225 A

CKT	Circuit Description	Quan	Trip	Pole	A		B		C		Pole	Trip	Quan	Circuit Description	CKT
1	Lighting 1st Floor	43	20 A	1	2752...	2176...					1	20 A	34	Lighting 1st Floor	2
3	Lighting 1st Floor	32	20 A	1			2253...	921 VA			1	20 A	37	Lighting 1st Floor	4
5	Lighting Site	11	20 A	1					1815...	1320...	1	20 A	8	Lighting Site	6
7	Lighting Site	10	20 A	1	1650...	1320...					1	20 A	8	Lighting Site	8
9	Spare	--	20 A	1			0 VA	2244...			1	30 A	1	INVERTER EMH	10
11	Spare	--	20 A	1					0 VA	0 VA	1	20 A	--	Spare	12
13	Spare	--	20 A	1	0 VA	0 VA					1	20 A	--	Spare	14
15	Spare	--	20 A	1			0 VA	0 VA			1	20 A	--	Spare	16
17	Spare	--	20 A	1					0 VA	0 VA	1	20 A	--	Spare	18
19	Spare	--	20 A	1	0 VA	0 VA					1	20 A	--	Spare	20
21	Spare	--	20 A	1			0 VA	0 VA			1	20 A	--	Spare	22
23	Spare	--	20 A	1					0 VA	0 VA	1	20 A	--	Spare	24
25	Spare	--	20 A	1	0 VA	4608...					3	60 A	1	HL2	26
27	Spare	--	20 A	1			0 VA	2990...			--	--	--	--	28
29	Spare	--	20 A	1					0 VA	219 VA	--	--	--	--	30
31	Provision	--	--	--	0 VA	0 VA					--	--	--	Provision	32
33	Provision	--	--	--			0 VA	0 VA			--	--	--	Provision	34
35	Provision	--	--	--					0 VA	0 VA	--	--	--	Provision	36
37	Provision	--	--	--	0 VA	0 VA					--	--	--	Provision	38
39	Provision	--	--	--			0 VA	0 VA			--	--	--	Provision	40
41	Provision	--	--	--					0 VA	0 VA	--	--	--	Provision	42
				Total Load:	9988 VA		8168 VA		3143 VA						
				Total Amps:	39 A		32 A		11 A						

Legend:

Load Classification	Connected Load	Demand Factor	Estimated Demand	Panel Totals	
Lighting	17967 VA	100.00%	17967 VA		
Other	1585 VA	100.00%	1585 VA	Total Conn. Load:	19403 VA
				Total Est. Demand:	19403 VA
				Total Conn.:	23 A
				Total Est. Demand:	23 A

Notes:

Branch Panel: PP1A

INSTRUCTIONAL BUILDING NO. 2

Location: Space 397 | **Supply From:** | **Mounting:** Recessed
Volts: 120/208 Wye | **Phases:** 3 | **Wires:** 4 | **Isolated Ground Bus:**
A.I.C. Rating: | **Mains Type:** | **Mains Rating:** 150 A | **MCB Rating:** 225 A

CKT	Circuit Description	Quan	Trip	Pole	A		B		C		Pole	Trip	Quan	Circuit Description	CKT
1	GWH-1 JAN 113	1	20 A	1	180 VA	1000...					1	20 A	1	POWER ASSISTED DOOR	2
3	RECEPTACLES CONV.	4	20 A	1			720 VA	1000...			1	20 A	1	POWER ASSISTED DOOR	4
5	EDF	1	20 A	1					800 VA	1000...	1	20 A	1	POWER ASSISTED DOOR	6
7	VENDING MACHINE	1	20 A	1	1500...	1500...					1	20 A	1	WOMENS 102 HAND DRYER	8
9	VENDING MACHINE	1	20 A	1			1500...	1500...			1	20 A	1	WOMENS 102 HAND DRYER	10
11	ELEV. SMOKE GUARD	1	20 A	1					1000...	1500...	1	20 A	1	MENS 103 HAND DRYER	12
13	TOILET 111 HAND DRYER	1	20 A	1	1500...	1500...					1	20 A	1	MENS 103 HAND DRYER	14
15	TOILET 111 HAND DRYER	1	20 A	1			1500...	500 VA			1	20 A	1	ELEV. CAB LTS FAN, ETC.	16
17	TOILET 112 HAND DRYER	1	20 A	1					1500...	100 VA	1	20 A	1	ELEV. PIT LIGHT	18
19	TOILET 112 HAND DRYER	1	20 A	1	1500...	180 VA					1	20 A	1	ELEV. PIT RECEPTACLE	20
21	RECEPTACLES CONV.	3	20 A	1			540 VA	180 VA			1	20 A	1	ELEV. MACH RM. RECEPTACLE	22
23	RECEPTACLES CONV.	4	20 A	1					720 VA	1200...	1	20 A	1	RECEPTACLES LOUNGE COUNTER	24
25	RECEPTACLE EXTERIOR	5	20 A	1	900 VA	1200...					1	20 A	1	RECEPTACLES LOUNGE COUNTER	26
27	RECEPTACLES CONVIENENCE	4	20 A	1			720 VA	800 VA			1	20 A	1	LOUNGE DISPOSAL	28
29	RECEPTACLES CONVIENENCE	2	20 A	1					360 VA	540 VA	1	20 A	3	RECEPTACLES LOUNGE RECEPTS	30
31	RECEPTACLES OFFICE	3	20 A	1	540 VA	180 VA					1	20 A	--	Fire Sprinkler Bell F.R. 110	32
33	RECEPTACLES OFFICE	4	20 A	1			720 VA	100 VA			1	20 A	--	Fire Smoke Damper MACH 107	34
35	Spare	--	20 A	1					0 VA	0 VA	1	20 A	--	Spare	36
37	Spare	--	20 A	1	0 VA	0 VA					1	20 A	--	Spare	38
39	Spare	--	20 A	1			0 VA	0 VA			1	20 A	--	Spare	40
41	Spare	--	20 A	1					0 VA	0 VA	1	20 A	--	Spare	42
				Total Load:	11500 VA		9680 VA		8720 VA						
				Total Amps:	97 A		82 A		73 A						

Legend:

Load Classification	Connected Load	Demand Factor	Estimated Demand	Panel Totals	
Lighting	100 VA	100.00%	100 VA		
Power	16500 VA	100.00%	16500 VA	Total Conn. Load:	29900 VA
Receptacle	13300 VA	87.59%	11650 VA	Total Est. Demand:	28250 VA
				Total Conn.:	83 A
				Total Est. Demand:	78 A

Notes:

Branch Panel: PHL1

INSTRUCTIONAL BUILDING NO. 2

Location: HUM. LAB COMP 1-1 120-1 | **Supply From:** | **Mounting:** FLUSH
Volts: 120/208 Wye | **Phases:** 3 | **Wires:** 4 | **Isolated Ground Bus:**
A.I.C. Rating: | **Mains Type:** | **Mains Rating:** 100 A | **MCB Rating:** 225 A

CKT	Circuit Description	Quan	Trip	Pole	A		B		C		Pole	Trip	Quan	Circuit Description	CKT
1	HUM LAB COMPUTERS	1	20 A	1	1600...	900 VA					1	20 A	5	HUM LAB COMP. RECEPTS	2
3	HUM LAB COMPUTERS	1	20 A	1			1600...	900 VA			1	20 A	5	HUM LAB COMP. RECEPTS	4
5	HUM LAB COMPUTERS	1	20 A	1					1600...	540 VA	1	20 A	1	HUM LAB COMP. LECTERN	6
7	HUM LAB COMPUTERS	1	20 A	1	1600...	0 VA					1	20 A	1	HUM LAB COMP. PROJ. SCREEN	8
9	HUM LAB COMPUTERS	1	20 A	1			1600...	500 VA			1	20 A	1	Motor Operated Shade HUM. LAB COMP 1-1...	10
11	HUM LAB COMPUTERS	1	20 A	1					1600...	0 VA	1	20 A	--	Spare	12
13	HUM LAB COMPUTERS	1	20 A	1	1600...	0 VA					1	20 A	--	Spare	14
15	HUM LAB COMPUTERS	1	20 A	1			1600...	0 VA			1	20 A	--	Spare	16
17	HUM LAB COMPUTERS	1	20 A	1					1600...	0 VA	1	20 A	--	Spare	18
19	HUM LAB COMPUTERS	1	20 A	1	1600...	0 VA					1	20 A	--	Spare	20
21	HUM LAB COMPUTERS	1	20 A	1			1600...	0 VA			1	20 A	--	Spare	22
23	HUM LAB COMPUTERS	1	20 A	1					1600...	0 VA	1	20 A	--	Spare	24
25	Provision	--	--	--	0 VA	0 VA					--	--	--	Provision	26
27	Provision	--	--	--			0 VA	0 VA			--	--	--	Provision	28
29	Provision	--	--	--					0 VA	0 VA	--	--	--	Provision	30
31	Provision	--	--	--	0 VA	0 VA					--	--	--	Provision	32
33	Provision	--	--	--			0 VA	0 VA			--	--	--	Provision	34
35	Provision	--	--	--					0 VA	0 VA	--	--	--	Provision	36
37	Provision	--	--	--	0 VA	0 VA					--	--	--	Provision	38
39	Provision	--	--	--			0 VA	0 VA			--	--	--	Provision	40
41	Provision	--	--	--					0 VA	0 VA	--	--	--	Provision	42
				Total Load:	7300 VA		7800 VA		6940 VA						
				Total Amps:	61 A		65 A		58 A						

Legend:

Load Classification	Connected Load	Demand Factor	Estimated Demand	Panel Totals	
Other	9600 VA	100.00%	9600 VA		
Power	10100 VA	100.00%	10100 VA	Total Conn. Load:	22040 VA
Receptacle	2340 VA	100.00%	2340 VA	Total Est. Demand:	22040 VA
				Total Conn.:	61 A
				Total Est. Demand:	61 A

Notes:

INVERTER PANEL SCHEDULE: EMH

Project: INSTRUCTIONAL BUILDING NO. 2 | **Mains:**
Location: Space 397
Supply From: HL1
Volts: 480/277 Wye

CKT	Circuit Description	Voltage	Quantity	Rating	Number of Poles	Load	Control
1	1ST & 2ND FLOOR ELECTRICAL/TELECOM ROOMS	277 V	8	20 A	1	184 VA	
2	1ST FLOOR CORRIDOR	277 V	9	20 A	1	151 VA	
3	1ST FLOOR EXIT SIGNS	277 V	14	20 A	1	828 VA	
4	2ND FLOOR CORRIDOR	277 V	4	20 A	1	12 VA	
5	2ND FLOOR EXIT SIGN	277 V	3	20 A	1	674 VA	
6	EXTERIOR LIGHTING	277 V	15	20 A	1	588 VA	
7	Spare	--	--	20 A	1	0 VA	
8	Spare	--	--	20 A	1	0 VA	
9	Spare	--	--	20 A	1	0 VA	
10	Spare	--	--	20 A	1	0 VA	
11	Spare	--	--	20 A	1	0 VA	
12	Spare	--	--	20 A	1	0 VA	
13	Spare	--	--	20 A	1	0 VA	
14	Spare	--	--	20 A	1	0 VA	
15	Spare	--	--	20 A	1	0 VA	
16	Spare	--	--	20 A	1	0 VA	
17	Spare	--	--	20 A	1	0 VA	
18	Spare	--	--	20 A	1	0 VA	
19	Spare	--	--	20 A	1	0 VA	
20	Spare	--	--	20 A	1	0 VA	
						Total Conn. Load:	2244 VA
						Total Amps:	3 A

Notes:
PT/TC - PHOTOCELL ON / TIMECLOCK OFF FUNCTION OF LIGHTING CONTROL PANEL
PC/PC - PHOTOCELL ON / PHOTOCELL OFF FUNCTION OF LIGHTING CONTROL PANEL
LC - LIGHTING CONTROL SYSTEM

Branch Panel: PP1C

INSTRUCTIONAL BUILDING NO. 2

Location: Space 397 | **Supply From:** | **Mounting:** Surface
Volts: 120/208 Wye | **Phases:** 3 | **Wires:** 4 | **Isolated Ground Bus:**
A.I.C. Rating: | **Mains Type:** | **Mains Rating:** 100 A | **MCB Rating:** 225 A

CKT	Circuit Description	Quan	Trip	Pole	A		B		C		Pole	Trip	Quan	Circuit Description	CKT
1	Receptacle Office	6	20 A	1	1080...	1080...					1	20 A	6	READ/STUDY 131 Receptacles	2
3	Receptacle Office	6	20 A	1			1080...	900 VA			1	20 A	5	READ/ STUDY 131 Receptacle	4
5	Receptacle Office	4	20 A	1					720 VA	500 VA	1	20 A	1	READ/ STUDY 131 Lectern	6
7	Receptacle Office	3	20 A	1	540 VA	800 VA					1	20 A	1	READ/ STUDY 131 Proj. Screen	8
9	Receptacle Office	4	20 A	1			720 VA	720 VA			1	20 A	1	READ/STUDY 131 FLOOR BOX	10
11	Receptacle Office	2	20 A	1					360 VA	720 VA	1	20 A	1	READ/STUDY 131 FLOOR BOX	12
13	Receptacle Office	3	20 A	1	540 VA	720 VA					1	20 A	1	READ/STUDY 131 FLOOR BOX	14
15	PARTITION	1	20 A	3			500 VA	720 VA			1	20 A	1	READ/STUDY 131 FLOOR BOX	16
17	--	--	--	--					500 VA	0 VA	1	20 A	--	Spare	18
19	--	--	--	--	500 VA	0 VA					1	20 A	--	Spare	20
21	Spare	--	20 A	1			0 VA	0 VA			1	20 A	--	Spare	22
23	Spare	--	20 A	1					0 VA	0 VA	1	20 A	--	Spare	24
25	Spare	--	20 A	1	0 VA	0 VA					1	20 A	--	Spare	26
27	Spare	--	20 A	1			0 VA	0 VA			1	20 A	--	Spare	28
29	Spare	--	20 A	1					0 VA	0 VA	1	20 A	--	Spare	30
31	Provision	--	--	--	0 VA	0 VA					--	--	--	Provision	32
33	Provision	--	--	--			0 VA	0 VA			--	--	--	Provision	34
35	Provision	--	--	--					0 VA	0 VA	--	--	--	Provision	36
37	Provision	--	--	--	0 VA	0 VA					--	--	--	Provision	38
39	Provision	--	--	--			0 VA	0 VA			--	--	--	Provision	40
41	Provision	--	--	--					0 VA	0 VA	--	--	--	Provision	42
				Total Load:	5260 VA		4640 VA		2800 VA						
				Total Amps:	46 A		41 A		23 A						

Legend:

Load Classification	Connected Load	Demand Factor	Estimated Demand	Panel Totals	
Power	2300 VA	100.00%	2300 VA		
Receptacle	10400 VA	98.08%	10200 VA	Total Conn. Load:	12700 VA
				Total Est. Demand:	12500 VA
				Total Conn.:	35 A
				Total Est. Demand:	35 A

Notes:

Branch Panel: PP1B

INSTRUCTIONAL BUILDING NO. 2

Location: Space 397 | **Supply From:** | **Mounting:** Recessed
Volts: 120/208 Wye | **Phases:** 3 | **Wires:** 4 | **Isolated Ground Bus:**
A.I.C. Rating: | **Mains Type:** | **Mains Rating:** 100 A | **MCB Rating:** 225 A

CKT	Circuit Description	Quan	Trip	Pole	A		B		C		Pole	Trip	Quan	Circuit Description	CKT
1	CR1 RECEPTACLES	4	20 A	1	720 VA	720 VA					1	20 A	4	HUM LAB RECEPTACLES	2
3	CR1 RECEPTACLES	3	20 A	1			540 VA	900 VA			1	20 A	5	HUM LAB RECEPTACLES	4
5	CR1 LECTERN	1	20 A	1					500 VA	500 VA	1	20 A	1	HUM LAB LECTERN	6
7	CR1 PROJ. SCREEN	1	20 A	1	800 VA	800 VA					1	20 A	1	HUM LAB PROJ. SCREEN	8
9	CR2 RECEPTACLES	5	20 A	1			900 VA	720 VA			1	20 A	1	HUM LAB FLOOR BOX	10
11	CR2 RECEPTACLES	4	20 A	1					720 VA	720 VA	1	20 A	1	HUM LAB FLOOR BOX	12
13	CR2 LECTERN	1	20 A	1	500 VA	720 VA					1	20 A	1	HUM LAB FLOOR BOX	14
15	CR2 PROJ. SCREEN	1	20 A	1			800 VA	720 VA			1	20 A	1	HUM LAB FLOOR BOX	16
17	CR3 RECEPTACLES	5	20 A	1					900 VA	720 VA	1	20 A	1	HUM LAB FLOOR BOX	18
19	CR3 RECEPTACLES	5	20 A	1	900 VA	720 VA					1	20 A	1	HUM LAB FLOOR BOX	20
21	CR3 LECTERN	1	20 A	1			500 VA	720 VA			1	20 A	1	HUM LAB FLOOR BOX	22
23	CR3 PROJ. SCREEN	1	20 A	1					800 VA	720 VA	1	20 A	1	HUM LAB FLOOR BOX	24
25	Vending Machine OUTDOOR	1	20 A	1	500 VA	720 VA					1	20 A	1	HUM LAB FLOOR BOX	26
27	Vending Machine OUTDOOR	1	20 A	1			500 VA	500 VA			1	20 A	1	Motor Operated Shade C.R.1 126	28
29	Motor Operated Shade C.R.3 128	1	20 A	1					500 VA	500 VA	1	20 A	1	Motor Operated Shade C.R.2 127	30
31	Motor Operated Shade MEETING ROOM-1...	1	20 A	1	500 VA	500 VA					1	20 A	1	Motor Operated Shade HUM. LAB-1 125-1	32
33	Spare	--	20 A	1			0 VA	0 VA			1	20 A	--	Spare	34
35	Spare	--	20 A	1					0 VA	0 VA	1	20 A	--	Spare	36
37	Spare	--	20 A	1	0 VA	0 VA					1	20 A	--	Spare	38
39	Spare	--	20 A	1			0 VA	0 VA			1	20 A	--	Spare	40
41	Spare	--	20 A	1					0 VA	0 VA	1	20 A	--	Spare	42
				Total Load:	8100 VA		6800 VA		6580 VA						
				Total Amps:	68 A		57 A		55 A						

Legend:

Load Classification	Connected Load	Demand Factor	Estimated Demand	Panel Totals	
Power	5700 VA	100.00%	5700 VA		
Receptacle	15780 VA	81.69%	12890 VA	Total Conn. Load:	21480 VA
				Total Est. Demand:	18590 VA
				Total Conn.:	60 A
				Total Est. Demand:	52 A

Notes:

4/8/2019 4:15:04 PM

IDENTIFICATION STAMP
DIV. OF THE STATE ARCHITECT
APP. 03-119458 INC:
REVIEWED FOR
SS ☑ FLS ☑ ACS ☑
DATE:05/23/2019

DIVISION OF THE STATE ARCHITECT
355 South Grand Avenue, Suite 2100
Los Angeles, CA 90012
ph: (213) 897-3995 fx:(213) 897-3159

agency

tBP architecture planning interiors

tBP/Architecture
4611 Teller Avenue
Newport Beach, CA 92660
ph: 949.673.0300 fx: 949.732.3895

architect

REGISTERED PROFESSIONAL ENGINEER STEPHEN R. ZARECK No. E 10372 EXP. 09-30-20 ELECTRICAL STATE OF CALIFORNIA

FBA Engineering
Consulting Electrical Engineers
150 Paularino Avenue Suite A120
Costa Mesa, CA 92626
949.852.9995 • 949.852.1657 (fax)
fbaengr.com
FBA Job Number: 212.227

consultant

COMPTON COLLEGE
INSTRUCTIONAL BUILDING No.2
COMPTON COMMUNITY COLLEGE DISTRICT
1111 E. ARTESIA BLVD. COMPTON, CA.

owner

tBP project number: 20998.00
file name:
drawn by: checked by:
date: 04 / 08 / 2019
rev: date: description:

THIS DRAWING AND THE DESIGNS, DEPICTIONS, IDEAS AND OTHER INFORMATION CONTAINED HEREIN CONSTITUTE UNPUBLISHED WORK OF tBP/ARCHITECTURE AND SHALL REMAIN PROPERTY OF tBP/ARCHITECTURE IN PERPETUITY. NO PART THEREOF SHALL BE REPRODUCED, DISCLOSED, DISTRIBUTED, SOLD, PUBLISHED OR OTHERWISE USED IN ANY WAY WITHOUT THE ADVANCED EXPRESS WRITTEN CONSENT OF tBP/ARCHITECTURE.

drawing title:
PANEL SCHEDULES

drawing
E3-1.1
drawing of

Branch Panel: PMR2

INSTRUCTIONAL BUILDING NO. 2

Location: MTG. RM 2 220 **Volts:** 120/208 Wye **A.I.C. Rating:**
Supply From: **Phases:** 3 **Mains Type:**
Mounting: FLUSH **Wires:** 4 **Mains Rating:** 100 A
Isolated Ground Bus: **MCB Rating:** 175 A

CKT	Circuit Description	Quan	Trip	Pole	A		B		C		Pole	Trip	Quan	Circuit Description	CKT
1	MTG. RM 2 COMPUTERS	1	20 A	1	1600...	720 VA					1	20 A	4	MTG. RM 2 RECEPTACLES	2
3	MTG. RM 2 COMPUTERS	1	20 A	1			1600...	720 VA			1	20 A	4	MTG. RM 2 RECEPTACLES	4
5	MTG. RM 2 COMPUTERS	1	20 A	1					1600...	500 VA	1	20 A	1	MTG. RM 2 LECTERN	6
7	MTG. RM 2 COMPUTERS	1	20 A	1	1600...	800 VA					1	20 A	1	MTG. RM 2 PROJ. SCREEN	8
9	MTG. RM 2 COMPUTERS	1	20 A	1			1600...	500 VA			1	20 A	1	Motor Operated Shade MTG. RM 2 220	10
11	MTG. RM 2 COMPUTERS	1	20 A	1					1600...	0 VA	1	20 A	--	Spare	12
13	MTG. RM 2 COMPUTERS	1	20 A	1	1600...	0 VA					1	20 A	--	Spare	14
15	MTG. RM 2 COMPUTERS	1	20 A	1			1600...	0 VA			1	20 A	--	Spare	16
17	MTG. RM 2 COMPUTERS	1	20 A	1					1600...	0 VA	1	20 A	--	Spare	18
19	MTG. RM 2 COMPUTERS	1	20 A	1	1600...	0 VA					1	20 A	--	Spare	20
21	MTG. RM 2 COMPUTERS	1	20 A	1			1600...	0 VA			1	20 A	--	Spare	22
23	MTG. RM 2 COMPUTERS	1	20 A	1					1600...	0 VA	1	20 A	--	Spare	24
25	Spare	--	20 A	1	0 VA	0 VA					1	20 A	--	Spare	26
27	Spare	--	20 A	1			0 VA	0 VA			1	20 A	--	Spare	28
29	Spare	--	20 A	1					0 VA	0 VA	1	20 A	--	Spare	30
31	Spare	--	20 A	1	0 VA	0 VA					1	20 A	--	Spare	32
33	Spare	--	20 A	1			0 VA	0 VA			1	20 A	--	Spare	34
35	Spare	--	20 A	1					0 VA	0 VA	1	20 A	--	Spare	36
37	Spare	--	20 A	1	0 VA	0 VA					1	20 A	--	Spare	38
39	Spare	--	20 A	1			0 VA	0 VA			1	20 A	--	Spare	40
41	Spare	--	20 A	1					0 VA	0 VA	1	20 A	--	Spare	42
				Total Load:	7920 VA		7620 VA		6900 VA						
				Total Amps:	67 A		64 A		58 A						

Legend:

Load Classification	Connected Load	Demand Factor	Estimated Demand	Panel Totals	
Other	9600 VA	100.00%	9600 VA		
Power	10900 VA	100.00%	10900 VA	**Total Conn. Load:**	22440 VA
Receptacle	1940 VA	100.00%	1940 VA	**Total Est. Demand:**	22440 VA
				Total Conn.:	62 A
				Total Est. Demand:	62 A

Notes:

Branch Panel: PHL2

INSTRUCTIONAL BUILDING NO. 2

Location: HUM. LAB COMP 2 130 **Volts:** 120/208 Wye **A.I.C. Rating:**
Supply From: **Phases:** 3 **Mains Type:**
Mounting: FLUSH **Wires:** 4 **Mains Rating:** 150 A
Isolated Ground Bus: **MCB Rating:** 225 A

CKT	Circuit Description	Quan	Trip	Pole	A		B		C		Pole	Trip	Quan	Circuit Description	CKT
1	HUM LAB COMPTUERS	1	20 A	1	1600...	900 VA					1	20 A	5	HUM LAB COMP 2 RECEPTACLES	2
3	HUM LAB COMPTUERS	1	20 A	1			1600...	900 VA			1	20 A	5	HUM LAB COMP 2 RECEPTACLES	4
5	HUM LAB COMPTUERS	1	20 A	1					1600...	500 VA	1	20 A	1	HUM LAB COMP 2 LECTERN	6
7	HUM LAB COMPTUERS	1	20 A	1	1600...	800 VA					1	20 A	1	Power HUM. LAB COMP 2 130	8
9	HUM LAB COMPTUERS	1	20 A	1			1600...	1500...			1	20 A	3	Motor Opearated Shade HUM. LAB COMP 2...	10
11	HUM LAB COMPTUERS	1	20 A	1					1600...	0 VA	1	20 A	--	Spare	12
13	HUM LAB COMPTUERS	1	20 A	1	1600...	0 VA					1	20 A	--	Spare	14
15	HUM LAB COMPTUERS	1	20 A	1			1600...	0 VA			1	20 A	--	Spare	16
17	HUM LAB COMPTUERS	1	20 A	1					1600...	0 VA	1	20 A	--	Spare	18
19	HUM LAB COMPTUERS	1	20 A	1	1600...	0 VA					1	20 A	--	Spare	20
21	HUM LAB COMPTUERS	1	20 A	1			1600...	0 VA			1	20 A	--	Spare	22
23	HUM LAB COMPTUERS	1	20 A	1					1600...	0 VA	1	20 A	--	Spare	24
25	HUM LAB COMPTUERS	1	20 A	1	1600...	0 VA					--	--	--	Provision	26
27	HUM LAB COMPTUERS	1	20 A	1			1600...	0 VA			--	--	--	Provision	28
29	HUM LAB COMPTUERS	1	20 A	1					1600...	0 VA	--	--	--	Provision	30
31	HUM LAB COMPTUERS	1	20 A	1	1600...	0 VA					--	--	--	Provision	32
33	Provision	--	--	--			0 VA	0 VA			--	--	--	Provision	34
35	Provision	--	--	--					0 VA	0 VA	--	--	--	Provision	36
37	Provision	--	--	--	0 VA	0 VA					--	--	--	Provision	38
39	Provision	--	--	--			0 VA	0 VA			--	--	--	Provision	40
41	Provision	--	--	--					0 VA	0 VA	--	--	--	Provision	42
				Total Load:	11300 VA		10400 VA		8500 VA						
				Total Amps:	97 A		89 A		71 A						

Legend:

Load Classification	Connected Load	Demand Factor	Estimated Demand	Panel Totals	
Other	12800 VA	100.00%	12800 VA		
Power	15100 VA	100.00%	15100 VA	**Total Conn. Load:**	30200 VA
Receptacle	2300 VA	100.00%	2300 VA	**Total Est. Demand:**	30200 VA
				Total Conn.:	84 A
				Total Est. Demand:	84 A

Notes:

Branch Panel: HL2

INSTRUCTIONAL BUILDING NO. 2

Location: Space 124 **Volts:** 480/277 Wye **A.I.C. Rating:**
Supply From: HL1 **Phases:** 3 **Mains Type:**
Mounting: Surface **Wires:** 4 **Mains Rating:** 60 A
Isolated Ground Bus: **MCB Rating:** 100 A

CKT	Circuit Description	Quan	Trip	Pole	A		B		C		Pole	Trip	Quan	Circuit Description	CKT
1	Lighting 2nd Floor	45	20 A	1	2880...	1728...					1	20 A	27	Lighting 2nd Floor	2
3	Lighting 2nd Floor	33	20 A	1			2112...	1021...			1	20 A	42	Lighting 2nd Floor	4
5	Spare	--	20 A	1					0 VA	219 VA	1	20 A	3	Lighting 2nd Floor Corridor	6
7	Spare	--	20 A	1	0 VA	0 VA					1	20 A	--	Spare	8
9	Spare	--	20 A	1			0 VA	0 VA			1	20 A	--	Spare	10
11	Spare	--	20 A	1					0 VA	0 VA	1	20 A	--	Spare	12
13	Spare	--	20 A	1	0 VA	0 VA					1	20 A	--	Spare	14
15	Spare	--	20 A	1			0 VA	0 VA			1	20 A	--	Spare	16
17	Spare	--	20 A	1					0 VA	0 VA	1	20 A	--	Spare	18
19	Spare	--	20 A	1	0 VA	0 VA					1	20 A	--	Spare	20
21	Spare	--	20 A	1			0 VA	0 VA			1	20 A	--	Spare	22
23	Spare	--	20 A	1					0 VA	0 VA	1	20 A	--	Spare	24
25	Spare	--	20 A	1	0 VA	0 VA					1	20 A	--	Spare	26
27	Spare	--	20 A	1			0 VA	0 VA			1	20 A	--	Spare	28
29	Spare	--	20 A	1					0 VA	0 VA	1	20 A	--	Spare	30
31	Provision	--	--	--	0 VA	0 VA					--	--	--	Provision	32
33	Provision	--	--	--			0 VA	0 VA			--	--	--	Provision	34
35	Provision	--	--	--					0 VA	0 VA	--	--	--	Provision	36
37	Provision	--	--	--	0 VA	0 VA					--	--	--	Provision	38
39	Provision	--	--	--			0 VA	0 VA			--	--	--	Provision	40
41	Provision	--	--	--					0 VA	0 VA	--	--	--	Provision	42
				Total Load:	4608 VA		2990 VA		219 VA						
				Total Amps:	18 A		12 A		1 A						

Legend:

Load Classification	Connected Load	Demand Factor	Estimated Demand	Panel Totals	
Lighting	7558 VA	100.00%	7558 VA		
Other	219 VA	100.00%	219 VA	**Total Conn. Load:**	7777 VA
				Total Est. Demand:	7777 VA
				Total Conn.:	9 A
				Total Est. Demand:	9 A

Notes:

Branch Panel: PP2C

INSTRUCTIONAL BUILDING NO. 2

Location: Space 124 **Volts:** 120/208 Wye **A.I.C. Rating:**
Supply From: **Phases:** 3 **Mains Type:**
Mounting: Surface **Wires:** 4 **Mains Rating:** 100 A
Isolated Ground Bus: **MCB Rating:** 175 A

CKT	Circuit Description	Quan	Trip	Pole	A		B		C		Pole	Trip	Quan	Circuit Description	CKT
1	RECEPTACLES OFFICE	6	20 A	1	1080...	1200...					1	20 A	1	RECEPTACLE LOUNGE COUNTER	2
3	RECEPTACLES OFFICE	5	20 A	1			900 VA	1200...			1	20 A	1	RECEPTACLE LOUNGE COUNTER	4
5	RECEPTACLES OFFICE	6	20 A	1					1080...	800 VA	1	20 A	1	LOUNGE DISPOSAL	6
7	RECEPTACLES OFFICE	4	20 A	1	720 VA	540 VA					1	20 A	3	Receptacle LOUNGE 230	8
9	RECEPTACLES OFFICE	5	20 A	1			900 VA	900 VA			1	20 A	5	RECEPTACLES OFFICE	10
11	RECEPTACLES OFFICE	5	20 A	1					900 VA	900 VA	1	20 A	5	RECEPTACLES OFFICE	12
13	RECEPTACLES OFFICE	4	20 A	1	720 VA	720 VA					1	20 A	4	RECEPTACLES OFFICE	14
15	RECEPTACLES OFFICE	3	20 A	1			540 VA	720 VA			1	20 A	4	RECEPTACLES OFFICE	16
17	RECEPTACLES OFFICE	3	20 A	1					540 VA	180 VA	1	20 A	1	Receptacle	18
19	Spare	--	20 A	1	0 VA	0 VA					1	20 A	--	Spare	20
21	Spare	--	20 A	1			0 VA	0 VA			1	20 A	--	Spare	22
23	Spare	--	20 A	1					0 VA	0 VA	1	20 A	--	Spare	24
25	Spare	--	20 A	1	0 VA	0 VA					1	20 A	--	Spare	26
27	Spare	--	20 A	1			0 VA	0 VA			1	20 A	--	Spare	28
29	Spare	--	20 A	1					0 VA	0 VA	1	20 A	--	Spare	30
31	Spare	--	20 A	1	0 VA	0 VA					1	20 A	--	Spare	32
33	Spare	--	20 A	1			0 VA	0 VA			1	20 A	--	Spare	34
35	Spare	--	20 A	1					0 VA	0 VA	1	20 A	--	Spare	36
37	Spare	--	20 A	1	0 VA	0 VA					1	20 A	--	Spare	38
39	Spare	--	20 A	1			0 VA	0 VA			1	20 A	--	Spare	40
41	Spare	--	20 A	1					0 VA	0 VA	1	20 A	--	Spare	42
				Total Load:	4980 VA		5160 VA		4400 VA						
				Total Amps:	42 A		44 A		37 A						

Legend:

Load Classification	Connected Load	Demand Factor	Estimated Demand	Panel Totals	
Receptacle	14540 VA	84.39%	12270 VA		
				Total Conn. Load:	14540 VA
				Total Est. Demand:	12270 VA
				Total Conn.:	40 A
				Total Est. Demand:	34 A

Notes:

Branch Panel: PP2B

INSTRUCTIONAL BUILDING NO. 2

Location: Space 124 **Volts:** 120/208 Wye **A.I.C. Rating:**
Supply From: **Phases:** 3 **Mains Type:**
Mounting: Surface **Wires:** 4 **Mains Rating:** 100 A
Isolated Ground Bus: **MCB Rating:** 175 A

CKT	Circuit Description	Quan	Trip	Pole	A		B		C		Pole	Trip	Quan	Circuit Description	CKT
1	CR6 RECEPTACLES	5	20 A	1	900 VA	900 VA					1	20 A	5	CR4 RECEPTACLES	2
3	CR6 RECEPTACLES	5	20 A	1			900 VA	900 VA			1	20 A	5	CR4 RECEPTACLES	4
5	CR6 LECTERN	1	20 A	1					500 VA	500 VA	1	20 A	1	CR4 LECTERN	6
7	CR6 PROJ. SCREEN	1	20 A	1	800 VA	800 VA					1	20 A	1	CR4 PROJ. SCREEN	8
9	CR7 RECEPTACLES	5	20 A	1			900 VA	900 VA			1	20 A	5	CR5 RECEPTACLES	10
11	CR7 RECEPTACLES	5	20 A	1					900 VA	900 VA	1	20 A	5	CR5 RECEPTACLES	12
13	CR7 LECTERN	1	20 A	1	500 VA	500 VA					1	20 A	1	CR5 LECTERN	14
15	CR7 PROJ. SCREEN	1	20 A	1			800 VA	800 VA			1	20 A	1	CR5 PROJ. SCREEN	16
17	CR8 RECEPTACLES	5	20 A	1					900 VA	500 VA	1	20 A	1	Motor Operated Shade C.R.6 223	18
19	CR8 RECEPTACLES	5	20 A	1	900 VA	500 VA					1	20 A	1	Motor Operated Shade C.R.7 224	20
21	CR8 LECTERN	1	20 A	1			500 VA	500 VA			1	20 A	1	Motor Operated Shade C.R.8 225	22
23	CR8 PROJ. SCREEN	1	20 A	1					800 VA	1000...	1	20 A	2	Motor Operated Shade C.R.4 222	24
25	Spare	--	20 A	1	0 VA	500 VA					1	20 A	1	Motor Operated Shade C.R.5 221	26
27	Spare	--	20 A	1			0 VA	0 VA			1	20 A	--	Spare	28
29	Spare	--	20 A	1					0 VA	0 VA	1	20 A	--	Spare	30
31	Spare	--	20 A	1	0 VA	0 VA					1	20 A	--	Spare	32
33	Spare	--	20 A	1			0 VA	0 VA			1	20 A	--	Spare	34
35	Spare	--	20 A	1					0 VA	0 VA	1	20 A	--	Spare	36
37	Spare	--	20 A	1	0 VA	0 VA					1	20 A	--	Spare	38
39	Spare	--	20 A	1			0 VA	0 VA			1	20 A	--	Spare	40
41	Spare	--	20 A	1					0 VA	0 VA	1	20 A	--	Spare	42
				Total Load:	6300 VA		6200 VA		6000 VA						
				Total Amps:	53 A		52 A		50 A						

Legend:

Load Classification	Connected Load	Demand Factor	Estimated Demand	Panel Totals	
Power	7000 VA	100.00%	7000 VA		
Receptacle	11500 VA	93.48%	10750 VA	**Total Conn. Load:**	18500 VA
				Total Est. Demand:	17750 VA
				Total Conn.:	51 A
				Total Est. Demand:	49 A

Notes:

Branch Panel: PP2A

INSTRUCTIONAL BUILDING NO. 2

Location: Space 124 **Volts:** 120/208 Wye **A.I.C. Rating:**
Supply From: **Phases:** 3 **Mains Type:**
Mounting: Surface **Wires:** 4 **Mains Rating:** 100 A
Isolated Ground Bus: **MCB Rating:** 175 A

CKT	Circuit Description	Quan	Trip	Pole	A		B		C		Pole	Trip	Quan	Circuit Description	CKT
1	RECEPTACLES CONV.	3	20 A	1	540 VA	720 VA					1	20 A	4	RECEPTACLES CONV.	2
3	EDF	1	20 A	1			800 VA	720 VA			1	20 A	4	RECEPTACLES CONV.	4
5	TOILET 211 HAND DRYER	1	20 A	1					1500...	1500...	1	20 A	1	WOMENS 203 HAND DRYER	6
7	TOILET 211 HAND DRYER	1	20 A	1	1500...	1500...					1	20 A	1	WOMENS 203 HAND DRYER	8
9	TOILET 212 HAND DRYER	1	20 A	1			1500...	1500...			1	20 A	1	MENS 204 HAND DRYER	10
11	TOILET 212 HAND DRYER	1	20 A	1					1500...	1500...	1	20 A	1	MENS 204 HAND DRYER	12
13	Area of Refuge Receptacle CORR.-1 200-1	1	20 A	1	500 VA	1080...					1	20 A	6	RECEPTACLES CONV.	14
15	Fire Smoke Damper	--	20 A	1			50 VA	0 VA			1	20 A	--	Spare	16
17	Spare	--	20 A	1					0 VA	0 VA	1	20 A	--	Spare	18
19	Spare	--	20 A	1	0 VA	0 VA					1	20 A	--	Spare	20
21	Spare	--	20 A	1			0 VA	0 VA			1	20 A	--	Spare	22
23	Spare	--	20 A	1					0 VA	0 VA	1	20 A	--	Spare	24
25	Spare	--	20 A	1	0 VA	0 VA					1	20 A	--	Spare	26
27	Spare	--	20 A	1			0 VA	0 VA			1	20 A	--	Spare	28
29	Spare	--	20 A	1					0 VA	0 VA	1	20 A	--	Spare	30
31	Spare	--	20 A	1	0 VA	0 VA					1	20 A	--	Spare	32
33	Spare	--	20 A	1			0 VA	0 VA			1	20 A	--	Spare	34
35	Spare	--	20 A	1					0 VA	0 VA	1	20 A	--	Spare	36
37	Spare	--	20 A	1	0 VA	0 VA					1	20 A	--	Spare	38
39	Spare	--	20 A	1			0 VA	0 VA			1	20 A	--	Spare	40
41	Spare	--	20 A	1					0 VA	0 VA	1	20 A	--	Spare	42
				Total Load:	5840 VA		4520 VA		6000 VA						
				Total Amps:	50 A		38 A		52 A						

Legend:

Load Classification	Connected Load	Demand Factor	Estimated Demand	Panel Totals	
Power	12500 VA	100.00%	12500 VA		
Receptacle	3860 VA	100.00%	3860 VA	**Total Conn. Load:**	16360 VA
				Total Est. Demand:	16360 VA
				Total Conn.:	45 A
				Total Est. Demand:	45 A

Notes:

Branch Panel: DPM1

INSTRUCTIONAL BUILDING NO. 2

Location: Space 124 **Volts:** 120/208 Wye **A.I.C. Rating:**
Supply From: TM1 **Phases:** 3 **Mains Type:**
Mounting: Surface **Wires:** 4 **Mains Rating:** 175 A
Isolated Ground Bus: **MCB Rating:** 225 A

CKT	Circuit Description	Quan	Trip	Pole	A		B		C		Pole	Trip	Quan	Circuit Description	CKT
1	AHU-1 LTS	1	20 A	1	400 VA	2600...					2	30 A	1	CU-1	2
3	AHU-1 RECEOTS	1	20 A	1			360 VA	2600...			--	--	--	--	4
5	ROOF RECEPTACLES	5	20 A	1					900 VA	2600...	2	30 A	1	CU-2	6
7	Spare	--	20 A	1	0 VA	2600...					--	--	--	--	8
9	B-1	1	20 A	1			1000...	2600...			2	30 A	1	CU-3	10
11	B-2	1	20 A	1					1000...	2600...	--	--	--	--	12
13	1ST FLOOR HVAC PANEL	1	20 A	1	1000...	2600...					2	30 A	1	CU-4	14
15	1ST FLOOR HVAC PANEL	1	20 A	1			1000...	2600...			--	--	--	--	16
17	2ND FLOOR HVAC PANEL	1	20 A	1					1000...	312 VA	2	15 A	1	FC-1	18
19	2ND FLOOR HVAC PANEL	1	20 A	1	1000...	312 VA					--	--	--	--	20
21	CP-1	1	20 A	1			100 VA	312 VA			2	20 A	1	FC-2	22
23	CP-2	1	20 A	1					100 VA	312 VA	--	--	--	--	24
25	CP-3	1	20 A	1	0 VA	2103...					2	20 A	1	FC-3	26
27	CP-4	1	20 A	1			0 VA	2103...			--	--	--	--	28
29	Spare	--	20 A	1					0 VA	2103...	2	20 A	1	FC-4	30
31	Spare	--	20 A	1	0 VA	2103...					--	--	--	--	32
33	Spare	--	20 A	1			0 VA	0 VA			1	20 A	--	Spare	34
35	Spare	--	20 A	1					0 VA	0 VA	1	20 A	--	Spare	36
37	Spare	--	20 A	1	0 VA	0 VA					1	20 A	--	Spare	38
39	Spare	--	20 A	1			0 VA	0 VA			1	20 A	--	Spare	40
41	Spare	--	20 A	1					0 VA	0 VA	1	20 A	--	Spare	42
				Total Load:	14718 VA		12472 VA		10727 VA						
				Total Amps:	125 A		106 A		89 A						

Legend:

Load Classification	Connected Load	Demand Factor	Estimated Demand	Panel Totals	
Motor	2200 VA	100.00%	2200 VA		
Other	4760 VA	100.00%	4760 VA	**Total Conn. Load:**	37903 VA
Power	30460 VA	100.00%	30460 VA	**Total Est. Demand:**	37903 VA
Receptacle	900 VA	100.00%	900 VA	**Total Conn.:**	105 A
				Total Est. Demand:	105 A

Notes:

Branch Panel: DHM1

INSTRUCTIONAL BUILDING NO. 2

Location: Space 124 **Volts:** 480/277 Wye **A.I.C. Rating:**
Supply From: **Phases:** 3 **Mains Type:**
Mounting: Surface **Wires:** 4 **Mains Rating:** 100 A
Isolated Ground Bus: **MCB Rating:** 100 A

CKT	Circuit Description	Quan	Trip	Pole	A		B		C		Pole	Trip	Quan	Circuit Description	CKT
1	P-1 - 1.5 HP	1	20 A	3	500 VA	500 VA					3	20 A	1	P-2 - 1.5 HP	2
3	--	--	--	--			500 VA	500 VA			--	--	--	--	4
5	--	--	--	--					500 VA	500 VA	--	--	--	--	6
7	EF-1 - 1.5 HP	1	20 A	3	500 VA	500 VA					3	20 A	1	P-3 - 1.5 HP	8
9	--	--	--	--			500 VA	500 VA			--	--	--	--	10
11	--	--	--	--					500 VA	500 VA	--	--	--	--	12
13	EF-2 - 1.5 HP	1	20 A	3	500 VA	0 VA					1	20 A	--	Spare	14
15	--	--	--	--			500 VA	0 VA			1	20 A	--	Spare	16
17	--	--	--	--					500 VA	0 VA	1	20 A	--	Spare	18
19	Provision	--	--	--	0 VA	0 VA					1	20 A	--	Spare	20
21	Provision	--	--	--			0 VA	0 VA			1	20 A	--	Spare	22
23	Provision	--	--	--					0 VA	0 VA	1	20 A	--	Spare	24
25	Provision	--	--	--	0 VA	0 VA					1	20 A	--	Spare	26
27	Provision	--	--	--			0 VA	0 VA			1	20 A	--	Spare	28
29	Provision	--	--	--					0 VA	0 VA	1	20 A	--	Spare	30
31	Provision	--	--	--	0 VA	0 VA					1	20 A	--	Spare	32
33	Provision	--	--	--			0 VA	0 VA			1	20 A	--	Spare	34
35	Provision	--	--	--					0 VA	0 VA	1	20 A	--	Spare	36
37	Provision	--	--	--	0 VA	14718...					3	70 A	1	PANEL DPM1 VIA TRANSFORMER TM1	38
39	Provision	--	--	--			0 VA	12472...			--	--	--	--	40
41	Provision	--	--	--					0 VA	10727 VA	--	--	--	--	42
				Total...	16785 VA		14615 VA		12889 VA						
				Total...	62 A		54 A		47 A						

Legend:

Load Classification	Connected Load	Demand Factor	Estimated Demand	Panel Totals	
HVAC	7500 VA	100.00%	7500 VA		
Motor	2200 VA	100.00%	2200 VA	**Total Conn. Load:**	44264 VA
Other	4760 VA	100.00%	4760 VA	**Total Est. Demand:**	44264 VA
Power	30460 VA	100.00%	30460 VA	**Total Conn.:**	53 A
Receptacle	900 VA	100.00%	900 VA	**Total Est. Demand:**	53 A

Notes:

Branch Panel: PSC1

INSTRUCTIONAL BUILDING NO. 2

Location: STUDY - COMPUTERS-1 226-1 **Volts:** 120/208 Wye **A.I.C. Rating:**
Supply From: **Phases:** 3 **Mains Type:**
Mounting: FLUSH **Wires:** 4 **Mains Rating:** 100 A
Isolated Ground Bus: **MCB Rating:** 175 A

CKT	Circuit Description	Quan	Trip	Pole	A		B		C		Pole	Trip	Quan	Circuit Description	CKT
1	STUDY/COMPUTERS COMPUTERS	1	20 A	1	1600...	720 VA					1	20 A	4	STUDY/COMPUTERS RECEPTACLES	2
3	STUDY/COMPUTERS COMPUTERS	1	20 A	1			1600...	720 VA			1	20 A	4	STUDY/COMPUTERS RECEPTACLES	4
5	STUDY/COMPUTERS COMPUTERS	1	20 A	1					1600...	500 VA	1	20 A	1	STUDY/COMPUTERS LECTERN	6
7	STUDY/COMPUTERS COMPUTERS	1	20 A	1	1600...	800 VA					1	20 A	1	STUDY/COMPUTERS PROJ. SCREEN	8
9	STUDY/COMPUTERS COMPUTERS	1	20 A	1			1600...	500 VA			1	20 A	1	Motor Operated Shade STUDY -...	10
11	STUDY/COMPUTERS COMPUTERS	1	20 A	1					1600...	0 VA	1	20 A	--	Spare	12
13	STUDY/COMPUTERS COMPUTERS	1	20 A	1	1600...	0 VA					1	20 A	--	Spare	14
15	STUDY/COMPUTERS COMPUTERS	1	20 A	1			1600...	0 VA			1	20 A	--	Spare	16
17	Power STUDY - COMPUTERS-1 226-1	1	20 A	1					1600...	0 VA	1	20 A	--	Spare	18
19	Power STUDY - COMPUTERS-1 226-1	1	20 A	1	1600...	0 VA					1	20 A	--	Spare	20
21	Other STUDY - COMPUTERS-1 226-1	1	20 A	1			1600...	0 VA			1	20 A	--	Spare	22
23	Other STUDY - COMPUTERS-1 226-1	1	20 A	1					1600...	0 VA	1	20 A	--	Spare	24
25	Spare	--	20 A	1	0 VA	0 VA					1	20 A	--	Spare	26
27	Spare	--	20 A	1			0 VA	0 VA			1	20 A	--	Spare	28
29	Spare	--	20 A	1					0 VA	0 VA	1	20 A	--	Spare	30
31	Spare	--	20 A	1	0 VA	0 VA					1	20 A	--	Spare	32
33	Spare	--	20 A	1			0 VA	0 VA			1	20 A	--	Spare	34
35	Spare	--	20 A	1					0 VA	0 VA	1	20 A	--	Spare	36
37	Spare	--	20 A	1	0 VA	0 VA					1	20 A	--	Spare	38
39	Spare	--	20 A	1			0 VA	0 VA			1	20 A	--	Spare	40
41	Spare	--	20 A	1					0 VA	0 VA	1	20 A	--	Spare	42
				Total Load:	7920 VA		7620 VA		6900 VA						
				Total Amps:	67 A		64 A		58 A						

Legend:

Load Classification	Connected Load	Demand Factor	Estimated Demand	Panel Totals	
Other	9600 VA	100.00%	9600 VA		
Power	10900 VA	100.00%	10900 VA	**Total Conn. Load:**	22440 VA
Receptacle	1940 VA	100.00%	1940 VA	**Total Est. Demand:**	22440 VA
				Total Conn.:	62 A
				Total Est. Demand:	62 A

Notes:

4/8/2019 4:15:06 PM

IDENTIFICATION STAMP
DIV. OF THE STATE ARCHITECT
APP. 03-119458 INC:
REVIEWED FOR
SS ☑ FLS ☑ ACS ☑
DATE:05/23/2019

DIVISION OF THE STATE ARCHITECT
355 South Grand Avenue, Suite 2100
Los Angeles, CA 90012
ph: (213) 897-3995 fx:(213) 897-3159

agency

tBP
architecture
planning
interiors

tBP/Architecture
4611 Teller Avenue
Newport Beach, CA 92660
ph: 949.673.0300 fx: 949.732.3895

architect

REGISTERED PROFESSIONAL ENGINEER
No. E 20372
EXP. 09-30-20
ELECTRICAL
STATE OF CALIFORNIA

FBA Engineering
Consulting Electrical Engineers
150 Paularino Avenue Suite A120
Costa Mesa, CA 92626
949.852.9995 • 949.852.1657 (fax)
fbaengr.com
FBA Job Number: 212.227

consultant

COMPTON COLLEGE
INSTRUCTIONAL BUILDING No.2

COMPTON COMMUNITY COLLEGE DISTRICT
1111 E. ARTESIA BLVD. COMPTON, CA.

owner

tBP project number: 20998.00
file name:
drawn by: checked by:
date: 04 / 08 / 2019
rev: date: description:

THIS DRAWING AND THE DESIGNS, DEPICTIONS, IDEAS AND OTHER INFORMATION CONTAINED HEREIN CONSTITUTE UNPUBLISHED WORK OF tBP/ARCHITECTURE AND SHALL REMAIN PROPERTY OF tBP/ARCHITECTURE IN PERPETUITY. NO PART THEREOF SHALL BE REPRODUCED, DISCLOSED, DISTRIBUTED, SOLD, PUBLISHED OR OTHERWISE USED IN ANY WAY WITHOUT THE ADVANCED EXPRESS WRITTEN CONSENT OF tBP/ARCHITECTURE.

drawing title:
PANEL SCHEDULES

drawing
E3-1.2
drawing of

STATE OF CALIFORNIA
Indoor Lighting
NRCC-LTI-E (Created 7/18) CALIFORNIA ENERGY COMMISSION

CERTIFICATE OF COMPLIANCE		NRCC-LTI-E
Project Name: COMPTON COLLEGE INSTRUCTIONAL BUILDING #2	Report Page:	Page 3 of 6
Project Address: 1111 E. ARTESIA BLVD	Date Prepared:	11/19/2018

H. INDOOR LIGHTING CONTROLS (Not Including PAFs)

Table Instructions:
*Please include lighting controls for conditioned and unconditioned spaces in this table. When an option having a * is selected, the notes section of this table must be completed. The lighting controls section of the Compliance Summary Table on the first page will show "DOES NOT COMPLY" if the notes are left blank.*

Building Level Controls

01	02	03	
Mandatory Demand Response §130.1(e)	Shut-off Controls §130.1(c)	Field Inspector	
		Pass	Fail
Not Required - Installing as PAF	Whole Building: Occupancy Sensors	☐	☐

Area Level Controls

04	05	06	07	08	09	10	11	12	
Area Description	Complete Building or Area Category Primary Function Area	Area Controls §130.1(a)	Multi-Level Controls §130.1(b)	Shut-Off Controls §130.1(c)	Primary Skylit Daylighting §130.1(d)	Secondary Daylighting §140.6(d)	Interlocked Systems §140.6(a)1	Field Inspector	
								Pass	Fail
Classrooms		Manual ON/OFF	Dimmer	Occ Sensor	Included	Included	☐	☐	☐

*NOTES: Controls with a * require a note in the space below explaining how compliance is achieved. 13

EX: Conference 1: Primary/Skylight Daylighting: Exempt because less than 120 watts of general lighting; EXCEPTION 1 to §130.1(d)2 Plan Sheet Showing Daylit Zones:

I. LIGHTING POWER ALLOWANCE: COMPLETE BUILDING OR AREA CATEGORY METHODS

Table Instructions: Complete the table for each area complying using the Complete Building or Area Category Methods per §140.6(b). Indicate if additional lighting power allowances per §140.6(c) or adjustments per §140.6(a) are being used.

Conditioned Spaces

01	02	03	04	05	06		
Area Description	Complete Building or Area Category Primary Function Area	Allowed Density (W/ft²)	Area (ft²)	Allowed Wattage (Watts)	Additional Allowances / Adjustments		
					Footnotes	PAF	Portable Ltg
Whole Building	Classroom Building	1.1	34,110	37,521	☐	☐	☐
		TOTAL:	34,110	37,521	See Tables J, K, R for detail		

J. POWER ADJUSTMENT: PORTABLE LIGHTING IN OFFICES

This Section Does Not Apply

K. ADDITIONAL LIGHTING ALLOWANCE: AREA CATEGORY METHOD FOOTNOTES

This Section Does Not Apply

STATE OF CALIFORNIA
Indoor Lighting
NRCC-LTI-E (Created 7/18) CALIFORNIA ENERGY COMMISSION

CERTIFICATE OF COMPLIANCE		NRCC-LTI-E
Project Name: COMPTON COLLEGE INSTRUCTIONAL BUILDING #2	Report Page:	Page 2 of 6
Project Address: 1111 E. ARTESIA BLVD	Date Prepared:	11/19/2018

D. EXCEPTIONAL CONDITIONS

This table is auto-filled with uneditable comments because of selections made or data entered in tables throughout the form.

No exceptional conditions apply to this project.

E. ADDITIONAL REMARKS

This table includes remarks made by the permit applicant to the Authority Having Jurisdiction.

F. INDOOR LIGHTING FIXTURE SCHEDULE

Table Instructions: Include all permanent designed lighting and all portable lighting in offices.

01	02	03		04	05	06	07	08	09	
Name or Item Tag	Complete Luminaire Description	Specialized Luminaire Types		Watts per luminaire[1]	How Wattage is determined	Total number luminaires	Exempt per §140.6(a)3	Design Watts	Field Inspector	
		Track	Portable						Pass	Fail
A1	A1-RECESSED LED 2X4 FIXTURE WITH	☐	☐	61	NA8 Default	207	☐	12,627	☐	☐
B1	B1-RECESSED LED 6" DOWNLIGHT FIX	☐	☐	29	NA8 Default	38	☐	1,102	☐	☐
C1	C1-SURFACE MOUNT LED 4' STRIP FIX	☐	☐	23	NA8 Default	15	☐	345	☐	☐
C2	C2-CHAIN HUNG LED 4' STRIP FIXTUR	☐	☐	23	NA8 Default	17	☐	391	☐	☐
D1	D1-RECESSED 6"X4' LED LINEAR FIXTU	☐	☐	58	NA8 Default	29	☐	1,682	☐	☐
E1	E1-CABLE HUNG LED 72" RING FIXTU	☐	☐	73	NA8 Default	4	☐	292	☐	☐
F1	F1-RECESSED LED LINEAR WALL WAS	☐	☐	28	NA8 Default	26	☐	728	☐	☐
G1	G1-CABLE HUNG LED 9"X8' DIRECT/IF	☐	☐	158.4	NA8 Default	6	☐	950.4	☐	☐
						Total Designed Watts CONDITIONED SPACES:		18,117.4		

[1]*NOTES: Authority Having Jurisdiction may ask for Luminaire cut sheets to confirm wattage used for compliance per §130.0(c) Wattage used must be the maximum rated for the luminaire, not the lamp.*

G. TRACK LIGHTING

This Section Does Not Apply

STATE OF CALIFORNIA
Indoor Lighting
NRCC-LTI-E (Created 7/18) CALIFORNIA ENERGY COMMISSION

CERTIFICATE OF COMPLIANCE		NRCC-LTI-E
Project Name: COMPTON COLLEGE INSTRUCTIONAL BUILDING #2	Report Page:	Page 1 of 6
Project Address: 1111 E. ARTESIA BLVD	Date Prepared:	11/19/2018

This document is used to demonstrate compliance with requirements in §110.9, §130.0, §130.1, §140.6, and §141.0(b)2 for indoor lighting scopes using the prescriptive path.

A. GENERAL INFORMATION

01	Project Location (city)	COMPTON	04	Total Conditioned Floor Area (ft²)	34,110
02	Climate Zone	8	05	Total Unconditioned Floor Area (ft²)	0
03	Occupancy Types Within Project (select all that apply):		06	# of Stories (Habitable Above Grade)	2

☐ Office ☐ Retail ☐ Warehouse ☐ Hotel/Motel ☑ School ☐ Support Areas
☐ Parking Garage ☐ High-Rise Residential ☐ Relocatable ☐ Other (write in):

B. PROJECT SCOPE

Table Instructions: Include any lighting systems that are within the scope of the permit application and are demonstrating compliance using the prescriptive path outlined in §140.6 or §141.0(b)2 for alterations. WARNING: Changing the Calculation Method in this table will result in the deletion of data previously input. If you need to change the calculation method, please open a new form or use "Save As".

Scope of Work	Conditioned Spaces		Unconditioned Spaces	
01	02	03	04	05
My Project Consists of (check all that apply):	Calculation Method	Area (ft²)	Calculation Method	Area (ft²)
☑ New Lighting System	Complete Building	34,110	Complete Building	0
☐ Altered Lighting System				
Total Area of Work (ft²)	34,110		0	

C. COMPLIANCE RESULTS

Table Instructions: If any cell on this table says "DOES NOT COMPLY" or "COMPLIES with Exceptional Conditions" refer to Table D. for guidance.

Lighting in conditioned and unconditioned spaces must not be combined for compliance per §140.6(b)1.	Allowed Lighting Power per §140.6(b) (Watts)						Actual Lighting Power per §140.6(a) (Watts)					Compliance Results
	01	02	03	04	05		06	07	08	09		10
	Complete Building §140.6(c)1	Area Category §140.6(c)2	Area Category Footnotes §140.6(c)2G (+)	Tailored §140.6(c)3 (+)	Total Allowed (Watts)		Total Designed (Watts)	Adjustments Portable Lighting §140.6(a) (-)	Adjustments PAF Control Credits §140.6(a)2 (-)	Total Actual (Watts) *Includes Adjustments		05 Must be ≥ 09 §140.6
	(See Table I)	(See Table I)	(See Table K)	(See Table L)			(See Table F)	(See Table J)	(See Table R)			
Conditioned:	37,521				37,521	≥	18,117.4			18,117.4		COMPLIES
Unconditioned:						=						
							Controls Compliance (See Table H for Details)					COMPLIES
							Rated Power Reduction Compliance (See Table S for Details)					Not Applicable

STATE OF CALIFORNIA
Indoor Lighting
NRCC-LTI-E (Created 7/18) CALIFORNIA ENERGY COMMISSION

CERTIFICATE OF COMPLIANCE		NRCC-LTI-E
Project Name: COMPTON COLLEGE INSTRUCTIONAL BUILDING #2	Report Page:	Page 6 of 6
Project Address: 1111 E. ARTESIA BLVD	Date Prepared:	11/19/2018

DOCUMENTATION AUTHOR'S DECLARATION STATEMENT

Documentation Author Name:	Steve R. Zajicek	Documentation Author Signature:	
Company:	FBA Engineering	Signature Date:	11/19/2018
Address:	150 Paularino Avenue Suite A120	CEA/ HERS Certification Identification (if applicable):	E10372
City/State/Zip:	Costa Mesa, California 92626	Phone:	9498529995

RESPONSIBLE PERSON'S DECLARATION STATEMENT
I certify the following under penalty of perjury, under the laws of the State of California:
1. **The information provided on this Certificate of Compliance is true and correct.**
2. **I am eligible under Division 3 of the Business and Professions Code to accept responsibility for the building design or system design identified on this Certificate of Compliance (responsible designer)**
3. **The energy features and performance specifications, materials, components, and manufactured devices for the building design or system design identified on this Certificate of Compliance conform to the requirements of Title 24, Part 1 and Part 6 of the California Code of Regulations.**
4. **The building design features or system design features identified on this Certificate of Compliance are consistent with the information provided on other applicable compliance documents, worksheets, calculations, plans and specifications submitted to the enforcement agency for approval with this building permit application.**
5. **I will ensure that a completed signed copy of this Certificate of Compliance shall be made available with the building permit(s) issued for the building, and made available to the enforcement agency for all applicable inspections. I understand that a completed signed copy of this Certificate of Compliance is required to be included with the documentation the builder provides to the building owner at occupancy.**

Responsible Designer Name:	Stephen R. Zajicek	Responsible Designer Signature:	
Company :	FBA Engineering	Date Signed:	11/19/2018
Address:	150 Paularino	License:	E10372
City/State/Zip:	Costa Mesa, CA 92626	Phone:	949-852-9995

STATE OF CALIFORNIA
Indoor Lighting
NRCC-LTI-E (Created 7/18) CALIFORNIA ENERGY COMMISSION

CERTIFICATE OF COMPLIANCE		NRCC-LTI-E
Project Name: COMPTON COLLEGE INSTRUCTIONAL BUILDING #2	Report Page:	Page 5 of 6
Project Address: 1111 E. ARTESIA BLVD	Date Prepared:	11/19/2018

T. DECLARATION OF REQUIRED CERTIFICATES OF INSTALLATION

Table Instructions: Selections have been made based on information provided in previous tables of this document. If any selection needs to be changed, please explain why in Table E. Additional Remarks. These documents must be provided to the building inspector during construction and can be found online at http://www.energy.ca.gov/2015publications/CEC-400-2015-033/appendices/forms/NRCI

YES	NO	Form/Title	Field Inspector	
			Pass	Fail
◉	○	NRCI-LTI-01-E - Must be submitted for all buildings	☐	☐
◉	○	NRCI-LTI-02-E - Must be submitted for a lighting control system, or for an Energy Management Control System (EMCS), to be recognized for compliance.	☐	☐
○	◉	NRCI-LTI-03-E - Must be submitted for a line-voltage track lighting integral current limiter, or for a supplementary overcurrent protection panel used to energize only line-voltage track lighting, to be recognized for compliance.	☐	☐
○	◉	NRCI-LTI-04-E - Must be submitted for two interlocked systems serving an auditorium, a convention center, a conference room, a multipurpose room, or a theater to be recognized for compliance.	☐	☐
○	◉	NRCI-LTI-05-E - Must be submitted for a Power Adjustment Factor (PAF) to be recognized for compliance.	☐	☐
○	◉	NRCI-LTI-06-E - Must be submitted for additional wattage installed in a video conferencing studio to be recognized for compliance.	☐	☐

U. DECLARATION OF REQUIRED CERTIFICATES OF ACCEPTANCE

Table Instructions: Selections have been made based on information provided in previous tables of this document. If any selection needs to be changed, please explain why in Table E. Additional Remarks. These documents must be provided to the building inspector during construction and must be completed through an Acceptance Test Technician Certification Provider (ATTCP). For more information visit: http://www.energy.ca.gov/title24/attcp/providers.html

YES	NO	Form/Title	Field Inspector	
			Pass	Fail
◉	○	NRCA-LTI-02-A - Must be submitted for occupancy sensors and automatic time switch controls.	☐	☐
◉	○	NRCA-LTI-03-A - Must be submitted for automatic daylight controls.	☐	☐
◉	○	NRCA-LTI-04-A - Must be submitted for demand responsive lighting controls.	☐	☐
○	◉	NRCA-LTI-05-A - Must be submitted for institutional tuning power adjustment factor (PAF).	☐	☐

STATE OF CALIFORNIA
Indoor Lighting
NRCC-LTI-E (Created 7/18) CALIFORNIA ENERGY COMMISSION

CERTIFICATE OF COMPLIANCE		NRCC-LTI-E
Project Name: COMPTON COLLEGE INSTRUCTIONAL BUILDING #2	Report Page:	Page 4 of 6
Project Address: 1111 E. ARTESIA BLVD	Date Prepared:	11/19/2018

L. TAILORED METHOD GENERAL LIGHTING POWER ALLOWANCE

This Section Does Not Apply

M. ADDITIONAL LIGHTING ALLOWANCE: TAILORED SPECIAL FUNCTION AREAS

This Section Does Not Apply

N. ADDITIONAL LIGHTING ALLOWANCE: TAILORED WALL DISPLAY

This Section Does Not Apply

O. ADDITIONAL LIGHTING ALLOWANCE: TAILORED FLOOR AND TASK LIGHTING

This Section Does Not Apply

P. ADDITIONAL LIGHTING ALLOWANCE: TAILORED ORNAMENTAL/SPECIAL EFFECTS

This Section Does Not Apply

Q. ADDITIONAL LIGHTING ALLOWANCE: TAILORED VERY VALUABLE MERCHANDISE

This Section Does Not Apply

R. POWER ADJUSTMENT: LIGHTING CONTROL CREDIT (PAF)

This Section Does Not Apply

S. RATED POWER REDUCTION COMPLIANCE BY SPACE

This Section Does Not Apply

STATE OF CALIFORNIA
Outdoor Lighting
NRCC-LTO-E (Created 9/17) CALIFORNIA ENERGY COMMISSION

CERTIFICATE OF COMPLIANCE		NRCC-LTO-E
Project Name: COMPTON COLLEGE INSTRUCTIONAL BUILDING #2	Report Page:	Page 3 of 6
Project Address: 1111 E. ARTESIA BLVD	Date Prepared:	11/19/2018

01	02	03	04		05				06	
Name or Item Tag	Complete Luminaire Description	Luminaire Type[1]	Uplight Ratings (Lumens)		Glare Ratings (Lumens)				Field Inspector	
			High (UH)	Low (UL)	Forward Very High (FVH)	Backlight Very High (BVH)	Forward High (FH)	Backlight High (BH)	Pass	Fail
SL1	SL1-LED POLE MOUNTED L	Type I - IV	0	0	0	0	0	0	☐	☐
	Maximum Lumens Allowed for Type I-IV:		500	500	500	500	7,500	2,500		
	Maximum Lumens Allowed for Type V and V Square:		500	500	500	500	7,500	7,500		

H. OUTDOOR LIGHTING CONTROLS

Table Instructions: Complete this table demonstrating compliance with controls requirements for all new or altered luminaires installed as part of the permit application. For alteration projects, luminaires which are existing to remain (ie untouched) and luminaires which are removed and reinstalled (wiring only) do not need to be included in this table even if they are within the spaces covered by the permit application.
*When an option having a * is selected, the notes section of this table must be completed. The lighting controls section of the Compliance Summary Table on the first page will show "DOES NOT COMPLY" if the notes are left blank. For each requirement in columns 02 through 07, do not leave the field blank, instead select NA or Exempt* from the dropdown list to indicate not applicable or an exemption.*

Mandatory Controls

01	02	03	04	05	06	07	08	
Area Description	Motion Sensor: Incandescent>100W §130.2(a)	Shut-Off §130.2(c)1	Auto-Schedule §130.2(c)2	Motion Sensor §130.2(c)3	Sales Frontage §130.2(c)4	Façade, Ornament, Outdoor Dining §130.2(c)5	Field Inspector	
							Pass	Fail
	NA: No Incand>100W	Astronomical Timer	Yes	NA: Mounted>24ft	NA: No Sales Front Ltg	No Applicable Ltg	☐	☐

*NOTES: Controls with a * require a note in the space below explaining how compliance is achieved.
EX: Not permitted by health & safety to be turned off; EXCEPTION 1 to §130.2(c).

I. LIGHTING POWER ALLOWANCE (per §140.7)

Table Instructions: Please complete this table for areas using the allowance calculations per §140.7. General Hardscape Allowance is per Table 140.7-A while "Use it or lost it" Allowances are per Table 140.7-B. Indicate which allowances are being used to expand sections for user input. Luminaires that qualify for one of the "Use it or lose it" allowances shall not qualify for another "Use it or lose it" allowance.

01					
General Hardscape Allowance	"Use it or lose it" Allowance (Watts)				
	☐ Per Application	☐ Sales Frontage	☐ Ornamental	☐ Per Specific Area	
☑	Table I (below)	Table J	Table K	Table L	Table M

Calculated General Hardscape Lighting Power Allowance per Table 140.7-A

Table Continued

STATE OF CALIFORNIA
Outdoor Lighting
NRCC-LTO-E (Created 9/17) CALIFORNIA ENERGY COMMISSION

CERTIFICATE OF COMPLIANCE		NRCC-LTO-E
Project Name: COMPTON COLLEGE INSTRUCTIONAL BUILDING #2	Report Page:	Page 2 of 6
Project Address: 1111 E. ARTESIA BLVD	Date Prepared:	11/19/2018

D. EXCEPTIONAL CONDITIONS

This table is auto-filled with uneditable comments because of selections made or data entered in tables throughout the form.

No exceptional conditions apply to this project.

E. ADDITIONAL REMARKS

This table includes remarks made by the permit applicant to the Authority Having Jurisdiction.

F. OUTDOOR LIGHTING FIXTURE SCHEDULE

Table Instructions: For new or altered lighting systems demonstrating compliance with §140.7 (ie Table I has expanded for input), include all luminaires being installed and any existing luminaires remaining or being moved within the spaces covered by the permit application in the Table below. For altered lighting systems using the Existing Power method per §141.0(b)2I. (ie Table N has expanded for input), include only new luminaires being installed and replacement luminaires being installed as part of the project scope (ie, do not include existing luminaires remaining or existing luminaires being moved).

Designed Wattage:

01	02	03	04	05	06	07	08	09	10	
Name or Item Tag	Complete Luminaire Description	Watts per luminaire[1]	How Wattage is determined	Total number luminaires	Luminaire Status[2]	Excluded per §140.7(a)	Design Watts	Cutoff Req. > 150W §130.2(b)[3]	Field Inspector	
									Pass	Fail
SL1	SL1-LED POLE MOUNTED LED WALKV	165	NA8 Default	37	New	☐	6,105	Yes	☐	☐
SL2	SL2-WALL MOUNTED LED SHARP CUT	44	NA8 Default	12	New	☐	528		☐	☐
SL3	SL3-RECESSED 6" LED DOWNLIGHT W	29	NA8 Default	2	New	☐	58		☐	☐
						Total Designed Watts:	6,691			

* NOTES: Selections with a * require a note in the space below explaining how compliance is achieved.
EX: Luminaire is lighting a statue; EXCEPTION 2 to §130.2(b).

G. CUTOFF REQUIREMENTS (BUG)

Table Instructions: Complete this table for fixtures >150W indicated on Table F os needing to comply with Cutoff Requirements. Maximum lumens can be found in Table 130.2-A for Uplight and Table 130.2-B for Glare by Lighting Zone.

01	02	03	04		05				06	
Name or Item Tag	Complete Luminaire Description	Luminaire Type[1]	Uplight Ratings (Lumens)		Glare Ratings (Lumens)				Field Inspector	
			High (UH)	Low (UL)	Forward Very High (FVH)	Backlight Very High (BVH)	Forward High (FH)	Backlight High (BH)	Pass	Fail

Table Continued

STATE OF CALIFORNIA
Outdoor Lighting
NRCC-LTO-E (Created 9/17) CALIFORNIA ENERGY COMMISSION

CERTIFICATE OF COMPLIANCE		NRCC-LTO-E
Project Name: COMPTON COLLEGE INSTRUCTIONAL BUILDING #2	Report Page:	Page 1 of 6
Project Address: 1111 E. ARTESIA BLVD	Date Prepared:	11/19/2018

This document is used to demonstrate compliance with requirements in §110.9, §130.0, §130.2, §140.7, and §141.0(b)2L for outdoor lighting scopes using the prescriptive path.

A. GENERAL INFORMATION

01	Project Location (city)	COMPTON	04	Total Illuminated Hardscape Area (ft²)	140,000
02	Climate Zone	8			
03	Outdoor Lighting Zone per Title 24, Part 1 §10-114 or as designated by Authority Having Jurisdiction (AHJ):				

☐ LZ-0: Very Low - Undeveloped Parkland ☐ LZ-2: Moderate - Rural Areas ☐ LZ-4: High - Must be reviewed by CA Energy Commission for Approval
☐ LZ-1: Low - Developed Parkland ☑ LZ-3: Moderately High - Urban Areas

B. PROJECT SCOPE

Table Instructions: Include any outdoor lighting systems that are within the scope of the permit application and are demonstrating compliance using the prescriptive path outlined in §140.7 or §141.0(b)2L for alterations.

My project consists of:		
01	02	
☑ New Lighting System	Must Comply with Allowances from §140.7.	
☐ Altered Lighting System	Is your alteration increasing the connected lighting load (Watts)?	○ Yes ○ No

[1] *FOOTNOTES: % of Existing Luminaires Being Altered = (Sum Total of Luminaires Being Added or Altered / Existing Luminaires within the Scope of the Permit Application) x 100*

C. COMPLIANCE RESULTS

Table Instructions: If any cell on this table says "DOES NOT COMPLY" or "COMPLIES with Exceptional Conditions" refer to Table D. for guidance.

Calculation of Total Allowed Lighting Power (Watts) §140.7 or §141.0(b)2L										Compliance Results		
01		02		03		04		05	06	07		08	09
General Hardscape Allowance §140.7(d)1	+	Per Application §140.7(d)2	+	Sales Frontage §140.7(d)2	+	Ornamental §140.7(d)2	+	Per Specific Area §140.7(d)2	OR Existing Power §141.0(b)2L =	Total Allowed (Watts)	≥	Total Actual (Watts)	07 Must be ≥ 08
(See Table I)		(See Table J)		(See Table K)		(See Table L)		(See Table M)	OR (See Table N) =			(See Table F)	
6,832.25	+		+		+		+		OR =	6,832.25	≥	6,691	COMPLIES
										Cutoff Compliance (See Table G for Details)		COMPLIES	
										Controls Compliance (See Table H for Details)		COMPLIES	

4/8/2019 4:15:08 PM

IDENTIFICATION STAMP
DIV. OF THE STATE ARCHITECT
APP. 03-119458 INC:
REVIEWED FOR
SS ☑ FLS ☑ ACS ☑
DATE:05/23/2019

DIVISION OF THE STATE ARCHITECT
355 South Grand Avenue, Suite 2100
Los Angeles, CA 90012
ph: (213) 897-3995 fx:(213) 897-3159

agency

tBP architecture planning interiors
tBP/Architecture
4611 Teller Avenue
Newport Beach, CA 92660
ph: 949.673.0300 fx: 949.732.3895

architect

FBA Engineering
Consulting Electrical Engineers
150 Paularino Avenue Suite A120
Costa Mesa, California 92626
949.852.9995 / 949.852.1697 (fax)
fbaeng.com
FBA Job Number 212.227

consultant

COMPTON COLLEGE
INSTRUCTIONAL BUILDING No.2
COMPTON COMMUNITY COLLEGE DISTRICT
1111 E. ARTESIA BLVD. COMPTON, CA.

owner

tBP project number: 20998.00
file name:
drawn by: checked by:
date: 04 / 08 / 2019

rev:	date:	description:

THE IDEAS AND DESIGNS, ARRANGEMENTS AND ASPECTS OF THE AUTOMATION CONTAINED HEREIN CONSTITUTE UNPUBLISHED WORK OF tBP/ARCHITECTURE AND SHALL REMAIN PROPERTY OF tBP/ARCHITECTURE IN PERPETUITY. NO PART THEREOF SHALL BE REPRODUCED, DISCLOSED, DISTRIBUTED, SOLD, PUBLISHED OR OTHERWISE USED IN ANY WAY WITHOUT THE ADVANCED EXPRESS WRITTEN CONSENT OF tBP/ARCHITECTURE.

drawing title:
ENERGY FORMS

drawing
E3-1.3
drawing of

STATE OF CALIFORNIA
Outdoor Lighting
NRCC-LTO-E (Created 9/17) CALIFORNIA ENERGY COMMISSION

CERTIFICATE OF COMPLIANCE			NRCC-LTO-E
Project Name:	COMPTON COLLEGE INSTRUCTIONAL BUILDING #2	Report Page:	Page 6 of 6
Project Address:	1111 E. ARTESIA BLVD	Date Prepared:	11/19/2018

DOCUMENTATION AUTHOR'S DECLARATION STATEMENT

Documentation Author Name:	Steve R. Zajicek	Documentation Author Signature:	
Company:	FBA Engineering	Signature Date:	11/19/2018
Address:	150 Paularino Avenue Suite A120	CEA/ HERS Certification Identification (if applicable):	E10372
City/State/Zip:	Costa Mesa, California 92626	Phone:	9498529995

RESPONSIBLE PERSON'S DECLARATION STATEMENT

I certify the following under penalty of perjury, under the laws of the State of California:

1. **The information provided on this Certificate of Compliance is true and correct.**
2. **I am eligible under Division 3 of the Business and Professions Code to accept responsibility for the building design or system design identified on this Certificate of Compliance (responsible designer)**
3. **The energy features and performance specifications, materials, components, and manufactured devices for the building design or system design identified on this Certificate of Compliance conform to the requirements of Title 24, Part 1 and Part 6 of the California Code of Regulations.**
4. **The building design features or system design features identified on this Certificate of Compliance are consistent with the information provided on other applicable compliance documents, worksheets, calculations, plans and specifications submitted to the enforcement agency for approval with this building permit application.**
5. **I will ensure that a completed signed copy of this Certificate of Compliance shall be made available with the building permit(s) issued for the building, and made available to the enforcement agency for all applicable inspections. I understand that a completed signed copy of this Certificate of Compliance is required to be included with the documentation the builder provides to the building owner at occupancy.**

Responsible Designer Name:	Stephen R. Zajicek	Responsible Designer Signature:	
Company :	FBA Engineering	Date Signed:	11/19/2018
Address:	150 Paularino	License:	E10372
City/State/Zip:	Costa Mesa, CA 92626	Phone:	949-852-9995

STATE OF CALIFORNIA
Electrical Power Distribution
NRCC-ELC-E (Created 5/18) CALIFORNIA ENERGY COMMISSION

CERTIFICATE OF COMPLIANCE			NRCC-ELC-E
Project Name:	COMPTON COLLEGE INSTRUCTIONAL BUILDING #2	Report Page:	Page 3 of 5
Project Address:	1111 E. ARTESIA BLVD	Date Prepared:	11/19/2018

Table Instructions: Please complete this table for entirely new or complete replacement electrical power distribution systems, or alterations that add, modify or replace both feeders and branch circuits to demonstrate compliance with §130.5(c). For alterations, only the altered circuits must demonstrate compliance per §141.0(b)2Pii.

01	02		03	04	05	
Electrical Service Designation/ Description	Combined Voltage Drop on Installed Feeder/Branch Circuit Conductors Compliance Method		Location of Voltage Drop Calculations[1]	Sheet Number for Voltage Drop Calculations in Construction Documents	Field Inspector	
					Pass	Fail
MDBH	☑ Voltage drop < 5%	☐ Permitted by CA Elec Code (Exception to §130.5(c))*	Contractor Responsible		☐	☐

**NOTES If "Permitted by CA Elec Code*" is selected under Compliance Method above, please indicate where the exception applies in the space provided below.*

[1] FOOTNOTES: Voltage drop calculations may be attached to the permit application outside the construction documents if allowed by the Authority Having Jurisdiction. Select "attached" if applicable. If calculations will be the responsibility of the installing contractor, select "Contractor Responsible".

I. CIRCUIT CONTROLS FOR 120-VOLT RECEPTACLES AND CONTROLLED RECEPTACLES

Table Instructions: Please complete this table for entirely new or complete replacement electrical power distribution systems to demonstrate compliance with §130.5(d). Both controlled and uncontrolled receptacles must be provided in office areas, lobbies, conference rooms, kitchen areas in office spaces, copy rooms and hotel/motel guest rooms.

01	02	03	04	05	06	
Electrical Service Designation/ Description	Location/ Type of Controlled Receptacles	Shut-Off Controls	Permanent Durable Marking Will be Used	Location of Requirements in Construction Documents	Field Inspector	
					Pass	Fail
	NA: No applicable space types		☐		☐	☐
				Add Row	Remove Last	

** If "Other*" is selected under Compliance Method above, please indicate how compliance has been achieved in the space provided below.*

J. DECLARATION OF REQUIRED CERTIFICATES OF INSTALLATION

Table Instructions: Selections have been made based on information provided in previous tables of this document. If any selection needs to be changed, please explain why in Table E. Additional Remarks. These documents must be provided to the building inspector during construction and can be found online at http://www.energy.ca.gov/2015publications/CEC-400-2015-033/appendices/forms/NRCI

YES	NO	Form/Title	Field Inspector	
			Pass	Fail
◉	○	NRCI-ELC-01-E - Must be submitted for all buildings.	☐	☐

STATE OF CALIFORNIA
Outdoor Lighting
NRCC-LTO-E (Created 9/17) CALIFORNIA ENERGY COMMISSION

CERTIFICATE OF COMPLIANCE			NRCC-LTO-E
Project Name:	COMPTON COLLEGE INSTRUCTIONAL BUILDING #2	Report Page:	Page 5 of 6
Project Address:	1111 E. ARTESIA BLVD	Date Prepared:	11/19/2018

O. DECLARATION OF REQUIRED CERTIFICATES OF INSTALLATION

Table Instructions: Selections have been made based on information provided in previous tables of this document. If any selection needs to be changed, please explain why in Table E. Additional Remarks. These documents must be provided to the building inspector during construction and can be found online at http://www.energy.ca.gov/2015publications/CEC-400-2015-033/appendices/forms/NRCI

YES	NO	Form/Title	Field Inspector	
			Pass	Fail
◉	○	NRCI-LTO-01-E - Must be submitted for all buildings.	☐	☐
◉	○	NRCI-LTO-02-E - Must be submitted for a lighting control system; or for an Energy Management Control System (EMCS), to be recognized for compliance.	☐	☐

P. DECLARATION OF REQUIRED CERTIFICATES OF ACCEPTANCE

Table Instructions: Selections have been made based on information provided in previous tables of this document. If any selection needs to be changed, please explain why in Table E. Additional Remarks. These documents must be provided to the building inspector during construction and must be completed through an Acceptance Test Technician Certification Provider (ATTCP). For more information visit: http://www.energy.ca.gov/title24/attcp/providers.html

YES	NO	Form/Title	Field Inspector	
			Pass	Fail
◉	○	NRCA-LTO-02-A - Must be submitted for all outdoor lighting controls except for alterations where controls area added to ≤ 20 luminaires.	☐	☐

STATE OF CALIFORNIA
Electrical Power Distribution
NRCC-ELC-E (Created 5/18) CALIFORNIA ENERGY COMMISSION

CERTIFICATE OF COMPLIANCE			NRCC-ELC-E
Project Name:	COMPTON COLLEGE INSTRUCTIONAL BUILDING #2	Report Page:	Page 2 of 5
Project Address:	1111 E. ARTESIA BLVD	Date Prepared:	11/19/2018

D. EXCEPTIONAL CONDITIONS

This table is auto-filled with uneditable comments because of selections made or data entered in tables throughout the form.

Table H indicates voltage drop calculations will be provided by the contractor.

E. ADDITIONAL REMARKS

This table includes remarks made by the permit applicant to the Authority Having Jurisdiction.

F. SERVICE ELECTRICAL METERING

This Section Does Not Apply

G. SEPARATION OF ELECTRICAL CIRCUITS FOR ENERGY MONITORING

Table Instructions: Complete this table for entirely new or complete replacement electrical power distribution systems to demonstrate compliance with §130.5(b). Using the dropdown choices in column 01, indicate the load types included for each service. Any load types that are not included in the service do not need to be shown.

Electrical Service Designation/Description: MDBH

01	02	03	04	05	
Load Type per Table 130.5-B[1]	Minimum Required Separation of Load per Table 130.5-B	Compliance Method[2]	Location of Requirements in Construction Documents	Field Inspector	
				Pass	Fail
Lighting including exit, egress and exterior	All lighting disaggregated by floor, type or area	Method 3	E-0.2	☐	☐

** NOTES: If "Other*" is selected under Compliance Method above, please indicate how compliance has been achieved in the space provided below.*

[1] FOOTNOTES: For each separate load type, up to 10% of the connected load may be of any type.
[2] Method 1: Switchboards/ motor control centers/ panelboard loads disaggregated for each load type
Method 2: Switchboards/ motor control centers/ panelboard supply other distribution equipment with loads disaggregated for each load type
Method 3: Complete metering system measures and reports loads by type
See Chapter 8 of the Nonresidential Compliance Manual for more detail on Compliance Methods.

H. VOLTAGE DROP

STATE OF CALIFORNIA
Electrical Power Distribution
NRCC-ELC-E (Created 5/18) CALIFORNIA ENERGY COMMISSION

CERTIFICATE OF COMPLIANCE			NRCC-ELC-E
Project Name:	COMPTON COLLEGE INSTRUCTIONAL BUILDING #2	Report Page:	Page 5 of 5
Project Address:	1111 E. ARTESIA BLVD	Date Prepared:	11/19/2018

DOCUMENTATION AUTHOR'S DECLARATION STATEMENT

Documentation Author Name:	Steve R. Zajicek	Documentation Author Signature:	
Company:	FBA Engineering	Signature Date:	11/19/2018
Address:	150 Paularino Avenue Suite A120	CEA/ HERS Certification Identification (if applicable):	E10372
City/State/Zip:	Costa Mesa, California 92626	Phone:	9498529995

RESPONSIBLE PERSON'S DECLARATION STATEMENT

I certify the following under penalty of perjury, under the laws of the State of California:

1. **The information provided on this Certificate of Compliance is true and correct.**
2. **I am eligible under Division 3 of the Business and Professions Code to accept responsibility for the building design or system design identified on this Certificate of Compliance (responsible designer)**
3. **The energy features and performance specifications, materials, components, and manufactured devices for the building design or system design identified on this Certificate of Compliance conform to the requirements of Title 24, Part 1 and Part 6 of the California Code of Regulations.**
4. **The building design features or system design features identified on this Certificate of Compliance are consistent with the information provided on other applicable compliance documents, worksheets, calculations, plans and specifications submitted to the enforcement agency for approval with this building permit application.**
5. **I will ensure that a completed signed copy of this Certificate of Compliance shall be made available with the building permit(s) issued for the building, and made available to the enforcement agency for all applicable inspections. I understand that a completed signed copy of this Certificate of Compliance is required to be included with the documentation the builder provides to the building owner at occupancy.**

Responsible Designer Name:	Stephen R. Zajicek	Responsible Designer Signature:	
Company :	FBA Engineering	Date Signed:	11/19/2018
Address:	150 Paularino	License:	E10372
City/State/Zip:	Costa Mesa, CA 92626	Phone:	949-852-9995

STATE OF CALIFORNIA
Outdoor Lighting
NRCC-LTO-E (Created 9/17) CALIFORNIA ENERGY COMMISSION

CERTIFICATE OF COMPLIANCE			NRCC-LTO-E
Project Name:	COMPTON COLLEGE INSTRUCTIONAL BUILDING #2	Report Page:	Page 4 of 6
Project Address:	1111 E. ARTESIA BLVD	Date Prepared:	11/19/2018

Calculated General Hardscape Lighting Power Allowance per Table 140.7-A

02	03	04	05	06	07	08	09
Area Description	Area Wattage Allowance (AWA)			Linear Wattage Allowance (LWA)			Total General AWA + LWA (Watts)
	Illuminated Area (ft²)	Allowed Density (W/ft²)	Area Allowance (Watts)	Perimeter Length (lf)	Allowed Density (W/lf)	Linear Allowance (Watts)	
SITE LIGHTING	140,000	0.04	5,600	2,035	0.35	712.25	6,312.25
					Initial Wattage Allowance for Entire Site (Watts):		520
					Total General Hardscape Allowance (Watts):		6,832.25

J. LIGHTING ALLOWANCE: PER APPLICATION

This Section Does Not Apply

K. LIGHTING ALLOWANCE: SALES FRONTAGE

This Section Does Not Apply

L. LIGHTING ALLOWANCE: ORNAMENTAL

This Section Does Not Apply

M. LIGHTING ALLOWANCE: PER SPECIFIC AREA

This Section Does Not Apply

N. EXISTING CONDITIONS POWER ALLOWANCE (alterations only)

This Section Does Not Apply

STATE OF CALIFORNIA
Electrical Power Distribution
NRCC-ELC-E (Created 5/18) CALIFORNIA ENERGY COMMISSION

CERTIFICATE OF COMPLIANCE			NRCC-ELC-E
Project Name:	COMPTON COLLEGE INSTRUCTIONAL BUILDING #2	Report Page:	Page 1 of 5
Project Address:	1111 E. ARTESIA BLVD	Date Prepared:	11/19/2018

This document is used to demonstrate compliance with mandatory requirements in §130.5 for electrical systems in newly constructed nonresidential, high-rise residential and hotel/motel occupancies. Additions and alterations to electrical service systems in these occupancies will also use this document to demonstrate compliance per §141.0(a) or §141.0(b)2P for alterations.

A. GENERAL INFORMATION

01	Project Location (city)	COMPTON	02	Occupancy Types Within Project:		
☐ Office	☐ Retail	☐ Warehouse	☐ Hotel/ Motel	☑ School	☐ Support Areas	
☐ Parking Garage	☐ High-Rise Residential	☐ Relocatable	☐ Other (Write In):			

B. PROJECT SCOPE

Table Instructions: Include any electrical service systems that are within the scope of the permit application.

01	02	03	04	05
Electrical Service Designation/ Description	Scope of Work[1]	Rating (kVA)	Utility Provided Metering System Exception to §130.5(a)[2]	Demand Response Controls
MDBH	New electrical service equipment & meter	750	☑	Where required, demand response controls must be specified which are capable of receiving and automatically responding to at least one standards based messaging protocol which enables demand response after receiving a demand response signal. Sections §120.2, §130.1 and §130.3 and compliance documents NRCC-MCH, NRCC-LTI and NRCC-LTS will indicate when demand response controls are required.

[1] FOOTNOTES: Adding only new feeders and branch circuits triggers Voltage Drop 130.5(c), no other requirements from 130.5 are required.
[2] Applicable if the utility company is providing a metering system that indicates instantaneous kW demand and kWh for a utility-defined period.

C. COMPLIANCE RESULTS

Table Instructions: If this table says "DOES NOT COMPLY" refer to Table D. for guidance and review the Table that indicates "No".

01		02		03		04	05
Service Electrical Metering §130.5(a)	AND	Separation for Monitoring §130.5(b)	AND	Voltage Drop §130.5(c)	AND	Controlled Receptacles §130.5(d)	Compliance Results
(See Table F)		(See Table G)		(See Table H)		(See Table I)	
Yes	AND	Yes	AND	Yes	AND	Yes	COMPLIES

STATE OF CALIFORNIA
Electrical Power Distribution
NRCC-ELC-E (Created 5/18) CALIFORNIA ENERGY COMMISSION

CERTIFICATE OF COMPLIANCE			NRCC-ELC-E
Project Name:	COMPTON COLLEGE INSTRUCTIONAL BUILDING #2	Report Page:	Page 4 of 5
Project Address:	1111 E. ARTESIA BLVD	Date Prepared:	11/19/2018

K. DECLARATION OF REQUIRED CERTIFICATES OF ACCEPTANCE

There are no Certificates of Acceptance applicable to electrical power distribution requirements.

4/8/2019 4:15:08 PM

IDENTIFICATION STAMP
DIV. OF THE STATE ARCHITECT
APP. 03-119458 INC:
REVIEWED FOR
SS ☑ FLS ☑ ACS ☑
DATE:05/23/2019

DIVISION OF THE STATE ARCHITECT
355 South Grand Avenue, Suite 2100
Los Angeles, CA 90012
ph: (213) 897-3995 fx:(213) 897-3159

agency

tBP architecture planning interiors

tBP/Architecture
4611 Teller Avenue
Newport Beach, CA 92660
ph: 949.673.0300 fx: 949.732.3895

architect

FBA Engineering
Consulting Electrical Engineers
150 Paularino Avenue Suite A120
Costa Mesa, California 92626
949.852.9995 * 949.852.1697 (fax)
www.fbaengineering.com
FBA Job Number 212.227

consultant

COMPTON COLLEGE
INSTRUCTIONAL BUILDING No.2
COMPTON COMMUNITY COLLEGE DISTRICT
1111 E. ARTESIA BLVD. COMPTON, CA.

owner

tBP project number: 20998.00
file name:
drawn by: checked by:
date: 04 / 08 / 2019

rev:	date:	description:

THIS DRAWING AND THE DESIGNS, IDEAS AND OTHER INFORMATION CONTAINED HEREIN, CONSTITUTE UNPUBLISHED WORK OF tBP/ARCHITECTURE AND SHALL REMAIN PROPERTY OF tBP/ARCHITECTURE IN PERPETUITY. NO PART THEREOF SHALL BE REPRODUCED, DISCLOSED, DISTRIBUTED, SOLD, PUBLISHED OR OTHERWISE USED IN ANY WAY WITHOUT THE ADVANCED EXPRESS WRITTEN CONSENT OF tBP/ARCHITECTURE.

drawing title:
ENERGY FORMS

drawing
E3-1.4
drawing of

FIRE ALARM EQUIPMENT SCHEDULE

ITEM DESCRIPTION	SYMBOL	MOUNTING	CATALOG NUMBER	CSFM LISTING NUMBER
FIRE ALARM CONTROL PANEL WITH VOICE EVACUATION		+72" AFF TO TOP OF CABINET	SIMPLEX 4100ES	7165-0026-0251
FIRE ALARM LCD ANNUNCIATOR		+60" AFF TO TOP OF CABINET	SIMPLEX 4603-9101	7120-0026-0225
FIRE ALARM REMOTE POWER SUPPLY		+60" AFF TO TOP OF CABINET	SIMPLEX 4009-9201	7300-0026-0214
MANUAL PULLSTATION ON FLUSH WALL MOUNTED OUTLET BOX	F	+48" AFF TO CENTER	SIMPLEX 4099-9006	7150-0026:0224
SMOKE DETECTOR PHOTOELECTRIC TYPE ON FLUSH CEILING MOUNTED OUTLET BOX		CEILING	SIMPLEX 4098-9714	7272-0026:0218
HEAT DETECTOR ON FLUSH CEILING MOUNTED OUTLET BOX	C	CEILING	SIMPLEX 4098-9733	7270-0026:0216
ADDRESSABLE MONITOR MODULE MOUNTS TO 4S DEEP BOX W/4S EXT	MM	FIELD VERIFY	SIMPLEX 4090-9001	7300-0026:0223
ADDRESSABLE CONTROL MODULE MOUNTS TO 4S DEEP BOX W/4S EXT	CM	FIELD VERIFY	SIMPLEX 4090-9002	7300-0026:0223
WEATHERPROOF SPEAKER ON FLUSH WALL MOUNTED IN WEATHERPROOF BACKBOX	WP 1W	+90" AFF TO TOP	COOPER/WHEELOCK ET1010-R	7320-0785:0105
FIRE ALARM SPEAKER/STROBE WALL MOUNTED IN A 4S DEEPBOX W/4S EXT (#CD DENOTES CANDELA)		+80-96" AFF TO BOTTOM OF LENS	COOPER/WHEELOCK E70 SERIES	7125-0785:152
FIRE ALARM SPEAKER/STROBE CEILING MOUNTED IN A 4S DEEPBOX W/4S EXT (#CD DENOTES CANDELA)		CEILING	COOPER/WHEELOCK E90 SERIES	7125-0785:0175
FIRE ALARM CEILING STROBE MOUNTED ON 4S DEEPBOX (#CD DENOTES CANDELA)		CEILING	COOPER/WHEELOCK LSTC3	7125-0785:0169
FIRE ALARM WALL MOUNTED STROBE ON 4S DEEPBOX (#CD DENOTES CANDELA)		+80-96" AFF TO BOTTOM OF LENS	COOPER/WHEELOCK LST	7125-0785:0165

FIRE ALARM GENERAL NOTES

1. THE FIRE ALARM SYSTEM SHALL CONFORM TO ARTICLE 760 OF THE CALIFORNIA ELECTRICAL CODE.

2. UPON COMPLETION OF THE INSTALLATION OF THE FIRE ALARM SYSTEM, A SATISFACTORY TEST OF THE ENTIRE SYSTEM SHALL BE MADE IN THE PRESCENCE OF THE AUTHORITY HAVING JURISDICTION (FIRE MARSHAL). THE CONTRACTOR SHALL PROVIDE ALL NECESSARY TEST EQUIPMENT (e.g. DIGITAL AMMETER, DECIBEL METER) AND VERIFY THAT THE GROUND FAULT DETECTION FOR THE FIRE ALARM SYSTEM IS OPERATIONAL DURING TESTING AND REMAINS SO ONCE THE SYSTEM IS APPROVED. UPON APPROVAL OF THE FIRE ALARM SYSTEM, THE CONTRACTOR SHALL PROVIDE THE OWNER WITH COMPLETE SET OF OPERATING INSTRUCTIONS FOR THE SYSTEM.

3. A MINIMUM OF 48 HOURS NOTICE SHALL BE REQUIRED PRIOR TO ANY INSPECTION AND/OR TEST.

4. AN APPROVED, STAMPED SET OF THE FIRE ALARM PLANS SHALL BE ON THE JOB SITE AND USED FOR INSTALLATION. ANY DEVIATIONS FROM THE APPROVED PLANS, INCLUDING SUBSTITUTION OF DEVICES, SHALL BE APPROVED BY THE INSPECTOR OF RECORD.

5. ANY DISCREPANCIES BETWEEN THE DRAWINGS AND THE CODE OR RECOGNIZED STANDARDS SHALL BE BROUGHT TO THE ATTENTION OF THE INSPECTOR OF RECORD.

6. ALL DEVICES OF THE FIRE ALARM SYSTEM SHALL BE APPROVED AND LISTED BY THE CALIFORNIA STATE FIRE MARSHAL.

7. A "RECORD OF COMPLETION" SHALL BE PREPARED BY THE INSTALLER AND GIVEN TO THE FIRE MARSHAL UPON COMPLETION OF THE INSTALLATION.

8. ALL TERMINAL CABINETS AND JUNCTION BOXES SHALL BE CLEARLY MARKED THAT THE ENCLOSURE IS PART OF THE FIRE ALARM SYSTEM.

9. THE CONTRACTOR SHALL LOCATE ALL SMOKE DETECTION DEVICES A MINIMUM OF 36" FROM ANY MECHANICAL REGISTERS.

10. THESE DRAWINGS ARE DIAGRAMMATIC IN NATURE. WIRE LENGTHS USED TO CALCULATE VOLTAGE DROPS REPRESENT ESTIMATES BASED ON MEASUREMENTS OF SCALED FLOOR PLAN DRAWINGS. CONTRACTOR TO ROUTE CONDUIT AS FIELD CONDITIONS REQUIRE. CONTRACTOR TO INSTALL ALL DEVICES ACCORDING TO MANUFACTURERS INSTRUCTIONS AND IN COMPLIANCE WITH ALL APPLICABLE CODES.

11. CONTRACTOR SHALL VERIFY LOCATION OF POST INDICATOR VALVES (PIV's) AND/OR OUTSIDE STEM & YOKE (OS&Y) VALVES INSTALLED ON FIRE SPRINKLER SERVICE. CONTRACTOR SHALL PROVIDE AND INSTALL TAMPER SWITCH(ES) AT EACH OF THESE VALVES AND INTERCONNECT TAMPER SWITCH(ES) TO THE FIRE ALARM CONTROL PANEL (FACP).

12. ALL WIRING TO BE IN CONDUIT. ALL CONDUIT IS TO BE A 3/4" MINIMUM. IF FLEX CONDUIT IS USED TO TRANSITION DOWN TO CEILING DEVICE THE FLEX CAN BE NO LONGER THAN 5 FEET.

13. CONTRACTOR SHALL EXTEND AND MAKE ALL FINAL CONNECTIONS TO EXISTING FIRE ALARM AND CENTRAL MONITORING FOR A COMPLETE AND FULLY CAMPUS WIDE FIRE ALARM NETWORK SYSTEM.

14. VISIT THE SITE PRIOR TO BID AND INVESTIGATE THE EXISTING FIRE ALARM SYSTEM EQUIPMENT. COORDINATE WITH THE EXISTING SYSTEMS MANUFACTURERS FOR ALL REQUIRED EQUIPMENT MODIFICATIONS, CONDUITS, WIRING AND UPGRADING REQUIRED TO EXTEND/NETWORK THE EXISTING SYSTEM TO THE NEW BUILDINGS. INCLUDE ALL COSTS IN BID. ALL NEW COMPONENTS SHALL BE COMPATIBLE WITH THE EXISTING SYSTEM.

15. FIRE ALARM SYSTEM SPLICES ARE NOT PERMITTED IN UNDERGROUND PULLBOXES.

FIRE ALARM WIRING DIAGRAM

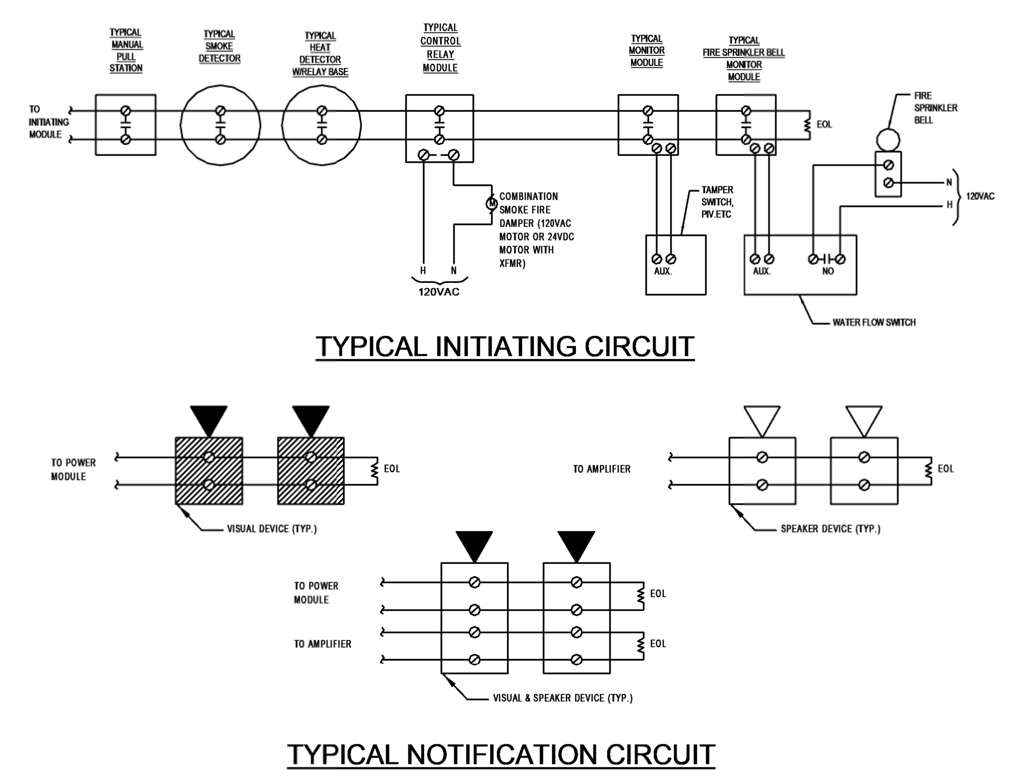

TYPICAL INITIATING CIRCUIT

TYPICAL NOTIFICATION CIRCUIT

FIRE ALARM SYSTEM NOTES

FIRE ALARM COMPLETE PLAN SUBMITTAL

1.0 PROJECT INFORMATION

A. OCCUPANCY GROUP

REFER TO ARCHITECTURAL DRAWINGS.

B. CONSTRUCTION TYPE

REFER TO ARCHITECTURAL DRAWINGS.

FIRE ALARM NOTE:
FIRE ALARM SUBMITTAL IS A COMPLETE PLAN SUBMITTAL IN ACCORDANCE WITH CFC-901.1 AND 907.1.1.

C. PENETRATIONS OF FIRE RATED WALLS SHALL BE PROTECTED IN ACCORDANCE WITH CALIFORNIA BUILDING CODE, PART 2, CHAPTER 7, TITLE 24. REFER TO THE ARCHITECTURAL PLANS FOR FIRE-RATE CORRIDOR(S), OCCUPANCY SEPARATION(S) AND AREA SEPARATION WALL(S).

D. UPON COMPLETION OF SYSTEM INSTALLATION, THE SYSTEM SHALL BE TESTED IN THE PRESENCE OF AND IN A MANNER ACCEPTABLE TO THE ENFORCING AGENCY.

E. PROVIDE A STATEMENT OF COMPLIANCE WHEN REQUESTING INSPECTION CFC 901.2.1

F. THE FIRE ALARM SYSTEM DESIGN FOR THIS PROJECT IS ADDRESSABLE AND FULLY AUTOMATIC.

2.0 APPLICABLE CODES AND STANDARDS

A. PARTIAL LIST OF APPLICABLE CODES AS OF JANUARY 1, 2017

2016 CALIFORNIA ADMINISTRATIVE CODE, PART 1, TITLE 24 C.C.R.
2016 CALIFORNIA BUILDING CODE (CBC), PART 2, TITLE 24 C.C.R.
(2015 INTERNATIONAL BUILDING CODE VOLUMES 1-2 AND 2016 CALIFORNIA AMENDMENTS)
2016 CALIFORNIA ELECTRICAL CODE (CEC), PART 3, TITLE 24 C.C.R.
(2014 NATIONAL ELECTRICAL CODE AND 2016 CALIFORNIA AMENDMENTS)
2016 CALIFORNIA MECHANICAL CODE (CMC), PART 4, TITLE 24 C.C.R.
(2015 UNIFORM MECHANICAL CODE AND 2016 CALIFORNIA AMENDMENTS)
2016 CALIFORNIA PLUMBING CODE (CPC), PART 5, TITLE 24 C.C.R.
(2015 UNIFORM PLUMBING CODE AND 2016 CALIFORNIA AMENDMENTS)
2016 CALIFORNIA ENERGY CODE (CEC), PART6, TITLE 24 C.C.R.
2016 CALIFORNIA FIRE CODE (CFC), PART 9, TITLE 24 C.C.R.
(2015 INTERNATIONAL FIRE CODE AND 2016 CALIFORNIA AMENDMENTS)
2016 CALIFORNIA GREEN BUILDING STANDARDS CODE, PART 11, TITLE 24 C.C.R.
2016 CALIFORNIA REFERENCED STANDARDS, PART 12, TITLE 24 C.C.R.
TITLE 19 C.C.R., PUBLIC SAFETY, STATE FIRE MARSHALL REGULATIONS.
2013 ASME A17.1 SAFETY CODE FOR ELEVATORS AND ESCALATORS.

B. PARTIAL LIST OF APPLICABLE STANDARDS

NFPA 13	AUTOMATIC SPRINKLER SYSTEMS	2016 EDITION
NFPA 14	STANDPIPE SYSTEMS	2013 EDITION
NFPA 17	DRY CHEMICAL EXTINGUISHING SYSTEM	2013 EDITION
NFPA 17A	WET CHEMICAL SYSTEMS	2013 EDITION
NFPA 20	STATIONARY PUMPS	2016 EDITION
NFPA 22	WATER TANKS FOR PRIVATE FIRE PROTECTION	2013 EDITION
NFPA 24	PRIVATE FIRE MAINS	2016 EDITION
NFPA 72	NATIONAL FIRE ALARM CODE	2016 EDITION
NFPA 80	FIRE DOORS AND OTHER OPENING PROTECTIVES	2016 EDITION
NFPA 92	STANDARDS FOR SMOKE CONTROL SYSTEMS	2015 EDITION
NFPA 253	CRITICAL RADIANT FLUX OF FLOOR COVERING SYSTEMS	2015 EDITION
NFPA 2001	CLEAN AGENT FIRE EXTINGUISHING SYSTEMS	2015 EDITION
ICC 300	ICC STANDS ON BLEACHERS, FOLDING AND TELESCOPING SEATING AND GRAND STANDS	2012 EDITION
UL 300	FIRE TESTING OF FIRE EXTINGUISHING SYSTEMS FOR PROTECTION OF RESTAURANT COOKING AREAS	2005 EDITION
UL 464	AUDIBLE SIGNAL APPLIANCES	2003 EDITION
UL 521	HEAT DETECTORS FOR FIRE PROTECTIVE SIGNALING SYSTEMS	1999 EDITION

REFERENCE CODE SECTION FOR NFPA STANDARDS-2016 CBC (SFM) CHAPTER 35. SEE CHAPTER 35 FOR STATE OF CALIFORNIA AMENDMENTS TO NFPA STANDARDS.

3.0 UPON RECEIPT OF THE CERTIFICATE OF COMPLIANCE, THE INSTALLER SHALL SUPPLY THE OWNER WITH A WRITTEN OPERATING, TESTING AND MAINTENANCE INSTRUCTIONS, POINT-TO-POINT AS BUILD DRAWINGS AND EQUIPMENT SPECIFICATIONS.

4.0 NFPA 72 CHAPTER 10,14 INSPECTION TESTING AND MAINTENANCE COMPLETE THE INSPECTION AND TESTING FORM IN ITS ENTIRETY SUBMIT A COPY TO THE DISTRICT, ARCHITECT AND DSA DIVISION OF FIRE AND LIFE SAFETY.

5.0 OCCUPANCY PROHIBITED TO ANY PORTION OF BUILDING UNTIL FIRE ALARM SYSTEM HAS BEEN TESTED AND APPROVED. CBC 901.5; CFC 901.5.1
RECORD DRAWINGS OF ALL INSPECTION, TEST SHALL BE MAINTAINED ON PREMISES MINIMUM THREE YEARS. CFC 901.6.2 (5 YEARS PER TITLE 14)
SMOKE DETECTORS TO UTILIZE CALIBRATED MANUFACTURE SENSITIVITY TEST INSTRUMENT. CFC 907.9.4

6.0 CONTRACTOR TO FIELD VERIFY AND PROVIDE DECIBEL METER FOR TESTING OF AMBIENT NOISE LEVELS (MINIMUM 15db ABOVE AMBIENT NOISE LEVELS REQUIRED - SEE NPFA 72 APPENDIX A-6.3.2). INSTALL ADDITIONAL AUDIBLE DEVICE AS NEEDED TO ATTAIN REQUIRED NOISE LEVELS AND INTELLIGIBILITY IN ALL REQUIRED AREAS. PROVIDE UPDATED PLANS AND CALCULATIONS THROUGH THE "CHANGE ORDER" PROCESS WHEN INSTALLING ADDITIONAL DEVICES AND OR EQUIPMENT. INSPECTOR OF RECORD (IOR) TO WITNESS FINAL TEST OF THE SYSTEM. CONTRACTOR(S) TO PROVIDE FINAL TEST RESULTS AND PROVIDE THE "RECORD OF COMPLETION FORM" TO THE ARCHITECT OF RECORD, OWNER, DIVISION OF THE STATE ARCHITECT, INSPECTOR OF RECORD (IOR)AND LOCAL FIRE AUTHORITY (AHJ).

6.1 FIRE ALARM NOTIFICATION DEVICES WITHIN THE NOTIFICATION ZONE WILL BE SYNCHRONIZED IN ACCORDANCE WITH NFPA 72 18.5.5.5.7

6.2 CONTRACTOR SHALL PROVIDE 24 HOUR FIRE WATCH IN CASE EXISTING CAMPUS FIRE ALARM SYSTEM IS SHUTDOWN OR DURING THE DURATION OF THE CONSTRUCTION PHASE.(IF APPLICABLE TO THE PROJECT).

6.3 EXISTING FIRE ALARM SYSTEM SHALL REMAIN OPERATIONAL DURING THE BUILDING MODERNIZATION CONSTRUCTION UNTIL THE NEW FIRE ALARM SYSTEM IS INSTALLED AND FULLY OPERABLE. UPON COMPLETE FINAL TEST AND APPROVAL OF THE NEW SYSTEM, EXISTING SYSTEM AND ITS DEVCES SHALL BE DISCONNECTED AND REMOVED AS REQUIRED.(IF APPLICABLE TO THE PROJECT).

SEQUENCE OF OPERATION

FIRE ALARM SYSTEM INPUT/OUTPUT MATRIX

SYSTEM OUTPUTS (FACP ANNUNCIATION / NOTIFICATION / REQUIRED FIRE SAFETY CONTROL)

- A ACTUATE COMMON ALARM SIGNAL INDICATOR
- B ACTUATE AUDIBLE ALARM SYSTEM
- C ACTUATE FIRE ALARM BELL
- D ACTUATE COMMON SUPERVISORY SIGNAL INDICATOR
- E ACTUATE AUDIBLE SUPERVISORY SIGNAL
- F ACTUATE COMMON TROUBLE SIGNAL INDICATOR
- G ACTUATE AUDIBLE TROUBLE SIGNAL
- H ACTUATE ZONE OR DEVICE ADDRESS ALARM INDICATOR
- I ACTUATE GENERAL EVACUATION SIGNAL
- J DISPLAY CHANGE OF STATUS
- K TRANSMIT FIRE ALARM SIGNAL TO CENTRAL STATION
- L TRANSMIT SUPERVISORY SIGNAL TO CENTRAL STATION
- M TRANSMIT TROUBLE SIGNAL TO CENTRAL STATION
- N RECALL ELEVATOR TO RECALL FLOOR
- O RECALL ELEVATOR TO ALTERNATE RECALL FLOOR
- P ACTUATE WARNING TO ELEVATOR CABS
- Q DELAYED REMOVAL OF POWER FROM ELEVATOR
- R SHUT DOWN RESPECTIVE AIR HANDLING EQUIPMENT
- S RELEASE FIRE SMOKE DAMPER

	SYSTEM INPUTS	A	B	C	D	E	F	G	H	I	J	K	L	M	N	O	P	Q	R	S	T	U	V	W	X	Y	Z
1	FIRE ALARM SYSTEM AC POWER FAILURE				●	●							●														
2	FIRE ALARM SYSTEM LOW BATTERY						●	●						●													
3	OPEN CIRCUIT						●	●						●													
4	GROUND FAULT						●	●						●													
5	NOTIFICATION APPLIANCE CIRCUIT SHORT						●	●						●													
6	BUILDING MANUAL PULL STATIONS	●	●						●	●	●	●															
7	AREA SMOKE AND HEAT DETECTORS	●	●						●	●	●	●			●				●	●							
8	RELAY MODULES				●	●			●				●						●	●							
9	SPRINKLER TAMPER SWITCH				●	●			●				●														
10	SPRINKLER WATER FLOW IN BUILDING	●	●	●		●			●	●	●	●			●		●	●									
11	SPRINKLER WATER FLOW IN ELEV EQUIPMENT ROOM OR SHAFT	●	●						●	●	●	●			●		●										
12	ELEV EQUIPMENT ROOM AREA SMOKE DETECTORS	●	●						●	●	●	●			●		●	●									
13	ELEV EQUIPMENT ROOM HEAT DETECTORS	●	●						●	●	●	●			●												
14	ELEV LOBBY SMOKE DETECTORS - UPPER FLOORS	●	●						●	●	●	●			●												
15	ELEV LOBBY SMOKE DETECTORS - RECALL FLOORS	●	●						●	●	●	●				●	●										
16	ELEV CONTROLLER POWER SHUNT TRIP STATUS				●	●			●				●														

4/8/2019 4:15:10 PM

PULL STATION / HORN / STROBE ELEVATION

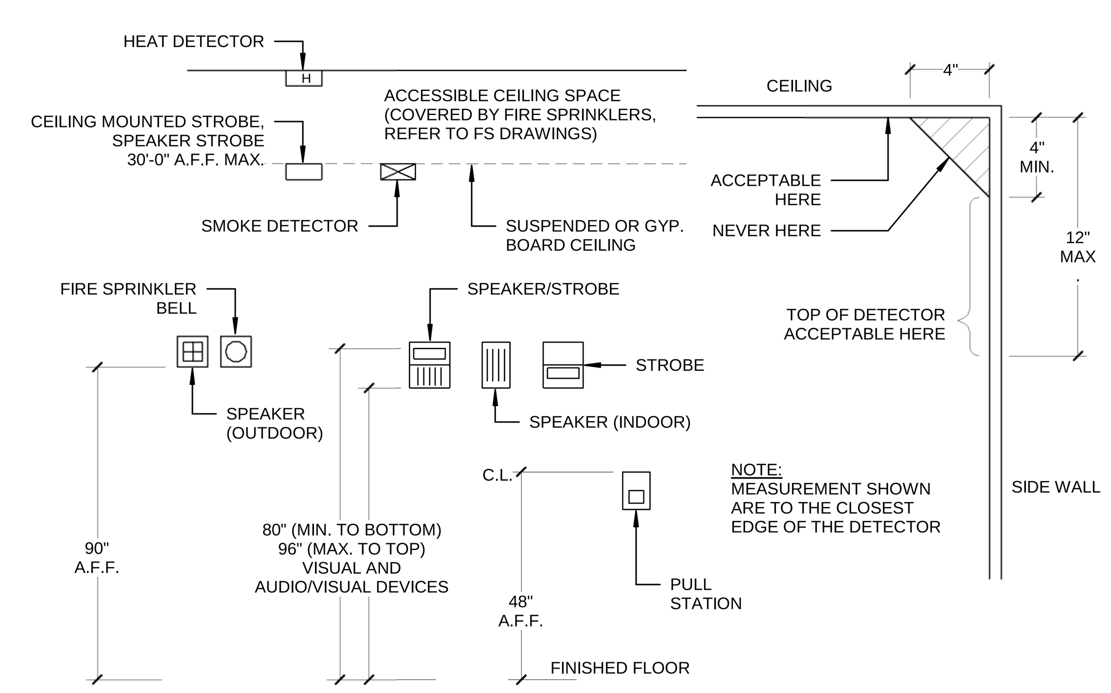

IDENTIFICATION STAMP
DIV. OF THE STATE ARCHITECT
APP. 03-119458 INC:
REVIEWED FOR
SS ☑ FLS ☑ ACS ☑
DATE:05/23/2019

DIVISION OF THE STATE ARCHITECT
355 South Grand Avenue, Suite 2100
Los Angeles, CA 90012
ph: (213) 897-3995 fx:(213) 897-3159
agency

tBP architecture planning interiors
tBP/Architecture
4611 Teller Avenue
Newport Beach, CA 92660
ph: 949.673.0300 fx: 949.732.3895
architect

FBA Engineering
Consulting Electrical Engineers
150 Paularino Avenue Suite A120
Costa Mesa, CA 92626
949.852.9995 • 949.852.1657 (fax)
fbaengr.com
FBA Job Number: 212.227
consultant

COMPTON COLLEGE
INSTRUCTIONAL BUILDING No.2
COMPTON COMMUNITY COLLEGE DISTRICT
1111 E. ARTESIA BLVD. COMPTON, CA.
owner

tBP project number: 20998.00
file name:
drawn by: checked by:
date: 04 / 08 / 2019
rev: date: description:

THIS DRAWING AND THE DESIGNS, DEPICTIONS, IDEAS AND OTHER INFORMATION CONTAINED HEREIN CONSTITUTE UNPUBLISHED WORK OF tBP/ARCHITECTURE AND SHALL REMAIN PROPERTY OF tBP/ARCHITECTURE IN PERPETUITY. NO PART THEREOF SHALL BE REPRODUCED, DISCLOSED, DISTRIBUTED, SOLD, PUBLISHED OR OTHERWISE USED IN ANY WAY WITHOUT THE ADVANCED EXPRESS WRITTEN CONSENT OF tBP/ARCHITECTURE.

drawing title:
FIRE ALARM SYMBOLS & DETAILS

drawing
EF-0.1
drawing of

FIRE ALARM VOLTAGE DROP CALCULATIONS

LOCATION	CIRCUIT #	SERVICE TO	DISTANCE (FEET)	CONDUCTOR SIZE (AWG)	LOAD BREAKDOWN	LOAD CIRCUIT TOTAL (AMPS)	VOLTS DROPPED (PERCENT)
1ST FLOOR	V1A	VISUAL DEVICES	250	12	5 @ 0.066 3 @ 0.158 5 @ 0.094 1 @ 0.202	1.476	5.086%
1ST FLOOR	S1A	SPEAKER DEVICES	250	18	0 @ 0.010 5 @ 0.040 6 @ 0.020 0 @ 0.080	0.320	1.524%
1ST FLOOR	V1B	VISUAL DEVICES	300	12	3 @ 0.066 4 @ 0.158 0 @ 0.094 2 @ 0.202	1.234	5.102%
1ST FLOOR	S1B	SPEAKER DEVICES	300	18	0 @ 0.010 7 @ 0.040 2 @ 0.020 0 @ 0.080	0.360	1.1828%
1ST FLOOR	V1C	VISUAL DEVICES	350	12	4 @ 0.066 4 @ 0.158 0 @ 0.094 2 @ 0.202	1.300	6.271%
1ST FLOOR	S1C	SPEAKER DEVICES	350	18	5 @ 0.010 7 @ 0.040 1 @ 0.020 0 @ 0.080	0.330	2.200%
1ST FLOOR	V1D	VISUAL DEVICES	350	12	0 @ 0.066 1 @ 0.158 2 @ 0.094 0 @ 0.202	0.158	0.762%
1ST FLOOR	S1D	SPEAKER DEVICES	350	18	0 @ 0.010 2 @ 0.040 0 @ 0.020 0 @ 0.080	0.080	0.583%
2ND FLOOR	V2A	VISUAL DEVICES	250	12	10 @ 0.066 6 @ 0.158 2 @ 0.094 0 @ 0.202	1.796	6.188%
2ND FLOOR	S2A	SPEAKER DEVICES	250	18	0 @ 0.010 0 @ 0.040 5 @ 0.020 0 @ 0.080	0.100	0.476%
2ND FLOOR	V2B	VISUAL DEVICES	300	12	2 @ 0.066 1 @ 0.158 1 @ 0.094 1 @ 0.202	1.396	5.772%
2ND FLOOR	S2B	SPEAKER DEVICES	300	18	0 @ 0.010 1 @ 0.040 9 @ 0.020 0 @ 0.080	0.220	1.257%
2ND FLOOR	V2C	VISUAL DEVICES	350	12	5 @ 0.066 6 @ 0.158 2 @ 0.094 0 @ 0.202	1.466	7.072%
2ND FLOOR	S2C	SPEAKER DEVICES	350	18	2 @ 0.010 1 @ 0.040 11 @ 0.020 0 @ 0.080	0.280	1.866%

NOTE: WORST CASE

FORMULA: $\frac{\text{AMPS X DISTANCE X 21.6}}{\text{CIRC. MILS}} \times \frac{100}{\text{VOLTS}} = \text{\% DROPPED}$

CIRCUIT V2C: $\frac{1.466 \text{ X } 350' \text{ X } 21.6}{6530} \times \frac{100}{24} = 7.072\%$

CIRCUIT S1C: $\frac{0.330 \text{ X } 350' \text{ X } 21.6}{1620} \times \frac{100}{70} = 2.200\%$

FIRE ALARM BATTERY CALCULATIONS

DIGITAL AUDIO AMPLIFIER "AMP1"

DEVICE	STAND-BY CURRENT	ALARM CURRENT
(1) CONTROLS	0.400	0.500
(0) 0.25W SPEAKER		0.000
(13) 0.50W SPEAKER		0.260
(21) 1W SPEAKER		0.840
(0) 2W SPEAKER		0.000
TOTAL	0.400	1.600

TOTAL STANDBY CURRENT X 60 HOURS = 0.400 A x 60 HOURS = 24.000 A-HR
TOTAL NEW ALARM CURRENT X 15 MINUTES = 1.600 A x 0.25 HR = 0.400 A-HR

TOTAL MINIMUM AMPERE - HOUR RATING OF BATTERIES = 24.400 A-HR

NOTES:
1. BATTERY CALCULATION SHALL BE BASED ON A MINIMUM OF 60.0 HOURS STANDBY AND 15 MINUTES ALARM.
2. PROVIDE A MINIMUM OF 40 A-HR OF TOTAL BATTERY STANDBY POWER FOR FIRE ALARM CONTROL PANEL.

DIGITAL AUDIO AMPLIFIER "AMP2"

DEVICE	STAND-BY CURRENT	ALARM CURRENT
(1) CONTROLS	0.400	0.500
(2) 0.25W SPEAKER		0.020
(25) 0.50W SPEAKER		0.500
(6) 1W SPEAKER		0.240
(0) 2W SPEAKER		0.000
TOTAL	0.400	1.260

TOTAL STANDBY CURRENT X 60 HOURS = 0.400 A x 60 HOURS = 24.000 A-HR
TOTAL NEW ALARM CURRENT X 15 MINUTES = 1.260 A x 0.25 HR = 0.315 A-HR

TOTAL MINIMUM AMPERE - HOUR RATING OF BATTERIES = 24.315 A-HR

NOTES:
1. BATTERY CALCULATION SHALL BE BASED ON A MINIMUM OF 60.0 HOURS STANDBY AND 15 MINUTES ALARM.
2. PROVIDE A MINIMUM OF 40 A-HR OF TOTAL BATTERY STANDBY POWER FOR FIRE ALARM CONTROL PANEL.

FIRE ALARM CONTROL PANEL "FACP"

DEVICE	STAND-BY CURRENT	ALARM CURRENT
(1) CONTROLS	0.340	0.340
(1) REMOTE ANNUCIATOR	0.100	0.225
(1) REMOTE MICROPHONE	0.040	0.160
(175) SMOKE DETECTOR	0.053	1.050
(97) HEAT DETECTOR	0.020	0.582
(2) PULLSTATION	0.001	0.001
(13) MONITOR MODULE	0.004	0.004
(0) CONTROL MODULE	0.000	0.000
(16) RELAY MODULE	0.005	0.005
TOTAL	0.563	2.367

TOTAL STANDBY CURRENT X 60 HOURS = 0.563 A x 60 HOURS = 33.78 A-HR
TOTAL NEW ALARM CURRENT X 15 MINUTES = 62.367 A x 0.25 HR = 0.592 A-HR

TOTAL MINIMUM AMPERE - HOUR RATING OF BATTERIES = 34.372 A-HR

NOTES:
1. BATTERY CALCULATION SHALL BE BASED ON A MINIMUM OF 60.0 HOURS STANDBY AND 15 MINUTES ALARM.
2. PROVIDE A MINIMUM OF 60 A-HR OF TOTAL BATTERY STANDBY POWER FOR FIRE ALARM CONTROL PANEL.

FIRE ALARM POWER SUPPLY "PS1"

DEVICE	STAND-BY CURRENT	ALARM CURRENT
(1) CONTROLS	0.091	0.145
(12) 15cd STROBE		0.792
(5) 30cd STROBE		0.470
(11) 75cd STROBE		1.738
(5) 110cd STROBE		1.010
TOTAL	0.091	4.155

TOTAL STANDBY CURRENT X 60 HOURS = 0.091 A x 60 HOURS = 5.460 A-HR
TOTAL NEW ALARM CURRENT X 15 MINUTES = 4.155 A x 0.25 HR = 1.039 A-HR

TOTAL MINIMUM AMPERE - HOUR RATING OF BATTERIES = 6.499 A-HR

NOTES:
1. BATTERY CALCULATION SHALL BE BASED ON A MINIMUM OF 60.0 HOURS STANDBY AND 15 MINUTES ALARM.
2. PROVIDE A MINIMUM OF 10 A-HR OF TOTAL BATTERY STANDBY POWER FOR FIRE ALARM CONTROL PANEL.

FIRE ALARM POWER SUPPLY "PS2"

DEVICE	STAND-BY CURRENT	ALARM CURRENT
(1) CONTROLS	0.091	0.145
(17) 15cd STROBE		1.122
(5) 30cd STROBE		0.470
(20) 75cd STROBE		3.160
(1) 110cd STROBE		0.202
TOTAL	0.091	5.099

TOTAL STANDBY CURRENT X 60 HOURS = 0.091 A x 60 HOURS = 5.460 A-HR
TOTAL NEW ALARM CURRENT X 15 MINUTES = 5.099 A x 0.25 HR = 1.275 A-HR

TOTAL MINIMUM AMPERE - HOUR RATING OF BATTERIES = 6.735 A-HR

NOTES:
1. BATTERY CALCULATION SHALL BE BASED ON A MINIMUM OF 60.0 HOURS STANDBY AND 15 MINUTES ALARM.
2. PROVIDE A MINIMUM OF 10 A-HR OF TOTAL BATTERY STANDBY POWER FOR FIRE ALARM CONTROL PANEL.

4/8/2019 4:15:12 PM

IDENTIFICATION STAMP
DIV. OF THE STATE ARCHITECT
APP. 03-119458 INC:
REVIEWED FOR
SS ☑ FLS ☑ ACS ☑
DATE:05/23/2019

DIVISION OF THE STATE ARCHITECT
355 South Grand Avenue, Suite 2100
Los Angeles, CA 90012
ph: (213) 897-3995 fx:(213) 897-3159
agency

tBP architecture planning interiors

tBP/Architecture
4611 Teller Avenue
Newport Beach, CA 92660
ph: 949.673.0300 fx: 949.732.3895
architect

FBA Engineering
Consulting Electrical Engineers
150 Paularino Avenue Suite A120
Costa Mesa, California 92626
949.852.0999 • 949.852.1697 (fax)
fbaengr.com
FBA Job Number 212.227
consultant

COMPTON COLLEGE
INSTRUCTIONAL BUILDING No.2
COMPTON COMMUNITY COLLEGE DISTRICT
1111 E. ARTESIA BLVD. COMPTON, CA.
owner

tBP project number: 20998.00
file name:
drawn by: checked by:
date: 04 / 08 / 2019

rev:	date:	description:

THIS DRAWING AND THE DESIGNS, DEPICTIONS, IDEAS AND OTHER INFORMATION CONTAINED HEREIN CONSTITUTE UNPUBLISHED WORK OF tBP/ARCHITECTURE AND SHALL REMAIN PROPERTY OF tBP/ARCHITECTURE IN PERPETUITY. NO PART THEREOF SHALL BE REPRODUCED, DISCLOSED, DISTRIBUTED, SOLD, PUBLISHED OR OTHERWISE USED IN ANY WAY WITHOUT THE ADVANCED EXPRESS WRITTEN CONSENT OF tBP/ARCHITECTURE.

drawing title:
FIRE ALARM
CALCULATIONS

drawing
EF-0.2
drawing of

KEY NOTES:

1. PROVIDE 120V DEDICATED CIRCUIT WITHCIRCUIT BREAKER "LOCK-ON" DEVICE.
2. PROVIDE INTERFACE CABLING PER MANUFACTURER'S REQUIREMENTS.
3. PROVIDE FIBER OPTIC NETWORK CABLING PER MANUFACTURER'S REQUIREMENTS.

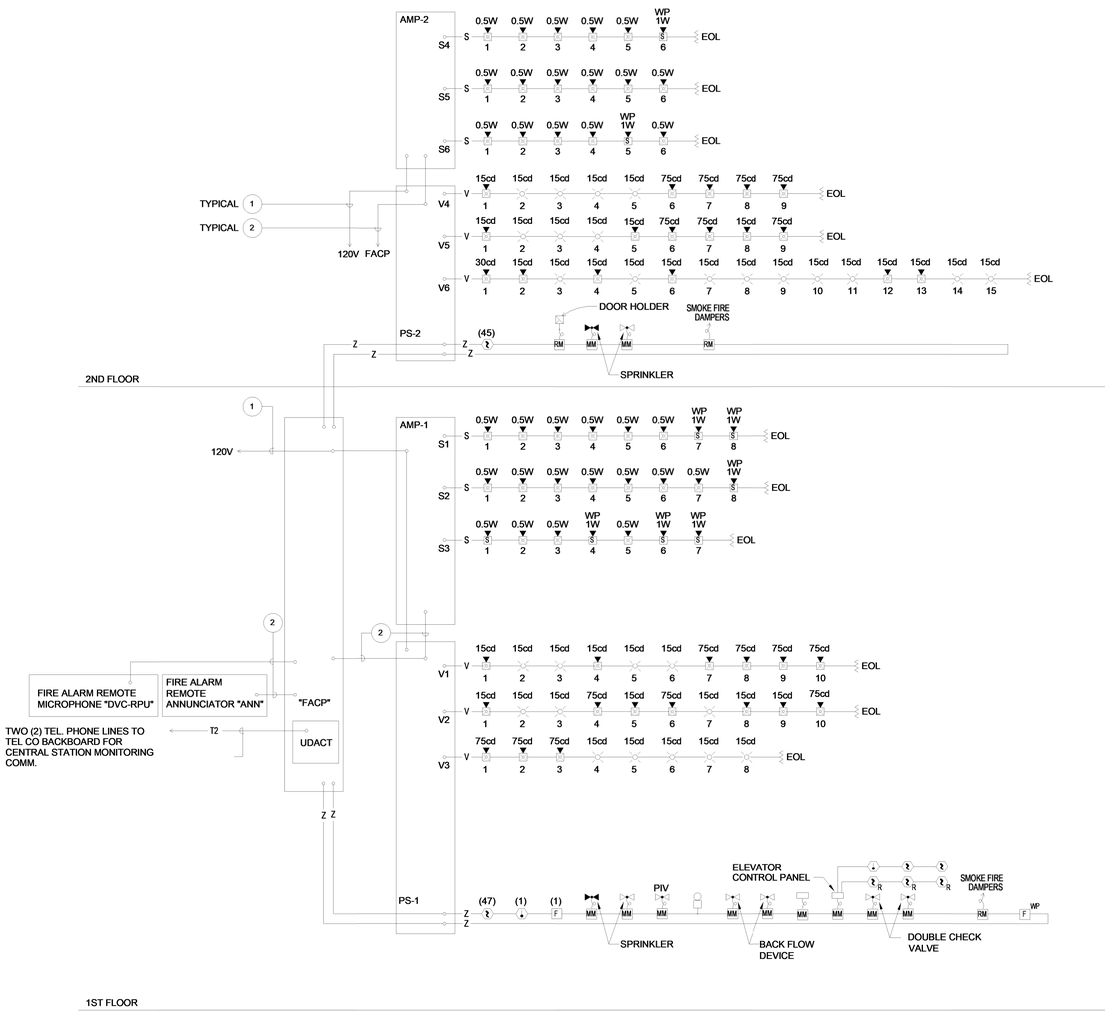

IDENTIFICATION STAMP
DIV. OF THE STATE ARCHITECT
APP. 03-119458 INC:
REVIEWED FOR
SS ☑ FLS ☑ ACS ☑
DATE:05/23/2019

DIVISION OF THE STATE ARCHITECT
355 South Grand Avenue, Suite 2100
Los Angeles, CA 90012
ph: (213) 897-3995 fx:(213) 897-3159

agency

tBP architecture planning interiors

tBP/Architecture
4611 Teller Avenue
Newport Beach, CA 92660
ph: 949.673.0300 fx: 949.732.3895

architect

FBA Engineering
Consulting Electrical Engineers
150 Palatino Avenue, Suite A120
Costa Mesa, CA 92626
949.852.9995 • 949.852.1657 (fax)
fbaengr.com
FBA Job Number: 212.227

consultant

COMPTON COLLEGE
INSTRUCTIONAL BUILDING No.2

COMPTON COMMUNITY COLLEGE DISTRICT
1111 E. ARTESIA BLVD. COMPTON, CA.

owner

tBP project number: 20998.00
file name:
drawn by: checked by:
date: 04 / 08 / 2019

rev:	date:	description:

THIS DRAWING AND THE DESIGNS, DEPICTIONS, IDEAS AND OTHER INFORMATION CONTAINED HEREIN CONSTITUTE UNPUBLISHED WORK OF tBP/ARCHITECTURE AND SHALL REMAIN PROPERTY OF tBP/ARCHITECTURE IN PERPETUITY. NO PART THEREOF SHALL BE REPRODUCED, DISCLOSED, DISTRIBUTED, SOLD, PUBLISHED OR OTHERWISE USED IN ANY WAY WITHOUT THE ADVANCED EXPRESS WRITTEN CONSENT OF tBP/ARCHITECTURE.

drawing title:
FIRE ALARM RISER DIAGRAMS

drawing
EF-0.3
drawing of

4/8/2019 4:15:14 PM

.IED HEALTH PROJECT SITE

FIRE ALARM SPRINKLER RISER

(N)FACP

(N)INSTRUCTIONAL BUILDING #2

(N) FAA

WP

ABE M. STEPHEN HEALTH CENTER

MODULAR BUILDING

BUILDING "D"

BUILDING "A" LIBRARY

BUILDING "C"

BUILDING "B"

BUILDING "A" BOOKSTORE

BUILDING "G"

ADMINISTRATION

0 15' 30' 60'

ENLARGED SITE FIRE ALARM PLAN

SCALE: 1"=30'

NORTH

KEY NOTES

IDENTIFICATION STAMP
DIV. OF THE STATE ARCHITECT
APP. 03-119458 INC:
REVIEWED FOR
SS ☑ FLS ☑ ACS ☑
DATE:05/23/2019

DIVISION OF STATE ARCHITECT
355 South Grand Avenue, Suite 2100
Los Angeles, California. 90012
ph: (213) 897-3995 Fax: (213) 897-3159
agency

tBP
architecture
planning
interiors

tBP/Architecture
4611 Teller Avenue
Newport Beach, CA 92660
ph: 949.673.0300 fx: 949.732.3895

architect

FBA Engineering
Consulting Electrical Engineers
Data & Telecom Consultants
Corporate Center • Suite A-230
Costa Mesa, CA 92626
949.852.1007 (Tel)
949.852.1007 (Fax)
fbaengr.com
FBA Job Number 212.227

consultant

COMPTON COLLEGE
INSTRUCTIONAL BUILDING No. 2

COMPTON COMMUNITY COLLEGE DISTRICT
1111 E. ARTESIA BLVD. COMPTON, CA.

owner

tBP project number : 20998.00
file name:
drawn by: checked by:
date: 04/08/2019

Rev:	date:	description:

THIS DRAWING AND THE DESIGNS, DEPICTIONS, IDEAS, AND OTHER INFORMATION CONTAINED HEREIN, CONSTITUTE UNPUBLISHED WORK OF tBP/ARCHITECTURE AND SHALL REMAIN THE PROPERTY OF tBP/ARCHITECTURE IN PERPETUITY. NO PART THEREOF SHALL BE REPRODUCED, DISCLOSED, DISTRIBUTED, SOLD, PUBLISHED OR OTHERWISE USED IN ANY WAY WITHOUT THE ADVANCED EXPRESS WRITTEN CONSENT OF tBP/ARCHITECTURE.

drawing title:
ENLARGED SITE
FIRE ALARM PLAN

drawing no.:
EF-1.0
drawing of

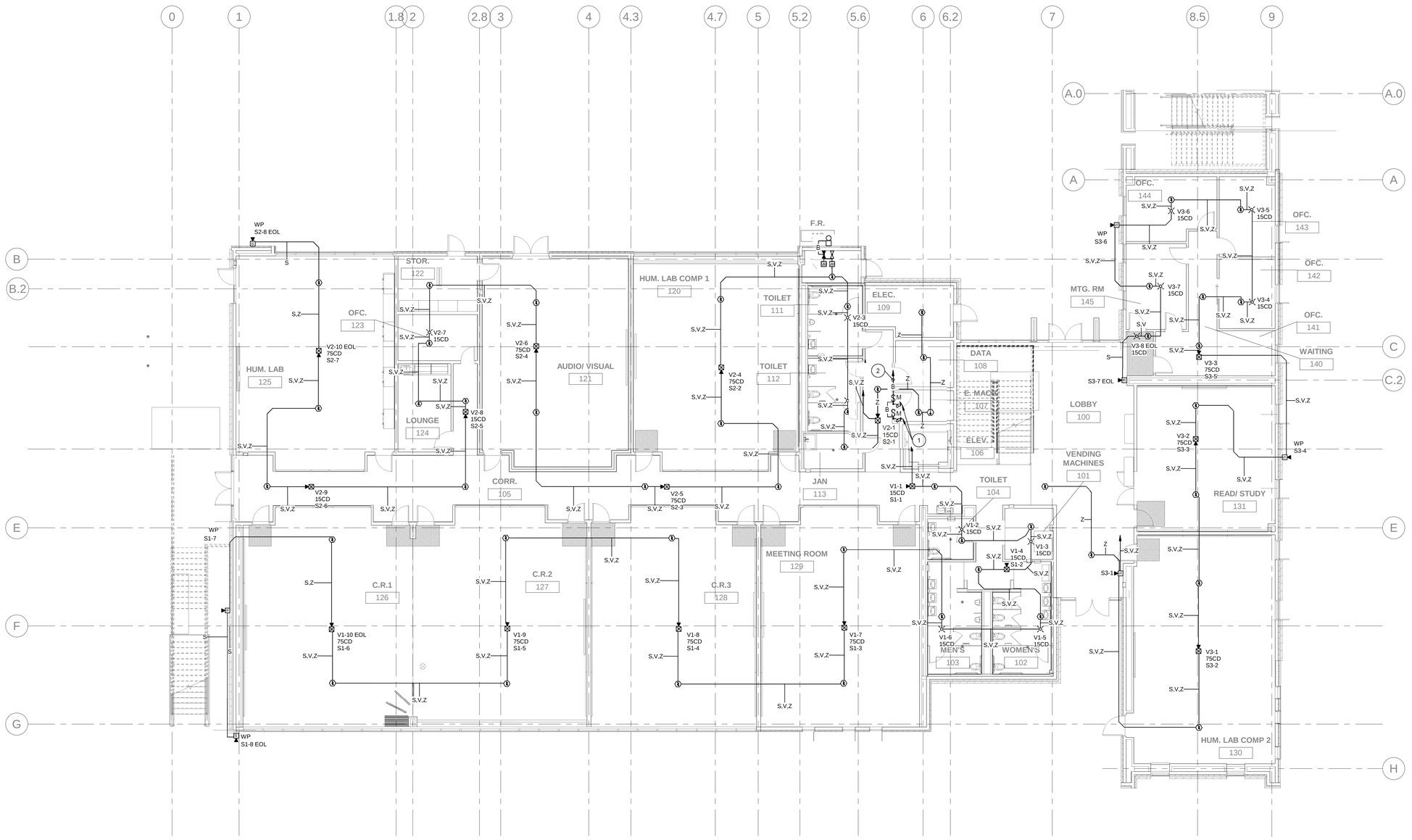

FIRST FLOOR FIRE ALARM PLAN 1

SCALE 1/8" = 1'-0"

FIRE ALARM CONDUIT SCHEDULE

FIRE ALARM CONDUIT SCHEDULE		
SYMBOL	CONDUCTORS (BELDEN 5020U2 OR EQUAL)	SIZE
—— I ——	2#16 UNSHIELDED TWISTED-PAIR INITIATING CIRCUIT	3/4"C.
—— V ——	2#12 THWN CU. VISUAL CIRCUIT	3/4"C.
—— S ——	2#18 SHIELDED TWISTED-PAIR SPEAKER CIRCUIT	3/4"C.
—— 2V ——	4#12 THWN CU. VISUAL CIRCUIT	3/4"C.
—— 2S ——	4#18 SHIELDED TWISTED-PAIR SPEAKER CIRCUIT	3/4"C.
—— I,2V,2S ——	MUTIPLE CONDUCTORS SHALL BE SHARED	1"C.
B	2#14 FPLP (INITIATION CKT., MISC. CKT.)	3/4"C.
UNDERGROUND CABLES SHALL BE USED UNDERGROUND RATED CABLES		

PLAN NOTES

1. PROVIDE CONNECTION TO SMOKE FIRE DAMPER AS REQUIRED. VERIFY EXACT LOCATION AND QUANTITY WITH MECHANICAL DRAWINGS PRIOR TO ROUGH-IN.
2. TO CONTROL MODULE AT ELECTRICAL ROOM.

IDENTIFICATION STAMP
DIV. OF THE STATE ARCHITECT
APP. 03-119458 INC:
REVIEWED FOR
SS ☑ FLS ☑ ACS ☑
DATE:05/23/2019

DIVISION OF THE STATE ARCHITECT
355 South Grand Avenue, Suite 2100
Los Angeles, CA 90012
ph: (213) 897-3995 fx:(213) 897-3159

agency

tBP architecture planning interiors

tBP/Architecture
4611 Teller Avenue
Newport Beach, CA 92660
ph: 949.673.0300 fx: 949.732.3895

architect

FBA Engineering
Consulting Electrical Engineers
150 Paulano Avenue Suite A120
Costa Mesa, CA 92626
949.852.9995 • 949.852.1657 (fax)
fbaeng.com
FBA Job Number: 212.227

consultant

COMPTON COLLEGE
INSTRUCTIONAL BUILDING No.2

COMPTON COMMUNITY COLLEGE DISTRICT
1111 E. ARTESIA BLVD. COMPTON, CA.

owner

tBP project number: 20998.00
file name:
drawn by: checked by:
date: 04 / 08 / 2019
rev: date: description:

THIS DRAWING AND THE DESIGNS, DEPICTIONS, IDEAS AND OTHER INFORMATION CONTAINED HEREIN CONSTITUTE UNPUBLISHED WORK OF tBP/ARCHITECTURE AND SHALL REMAIN PROPERTY OF tBP/ARCHITECTURE IN PERPETUITY. NO PART THEREOF SHALL BE REPRODUCED, DISCLOSED, DISTRIBUTED, SOLD, PUBLISHED OR OTHERWISE USED IN ANY WAY WITHOUT THE ADVANCED EXPRESS WRITTEN CONSENT OF tBP/ARCHITECTURE.

drawing title:
FIRST FLOOR FIRE ALARM PLAN

drawing
EF-1.1
drawing of

4/8/2019 4:15:20 PM

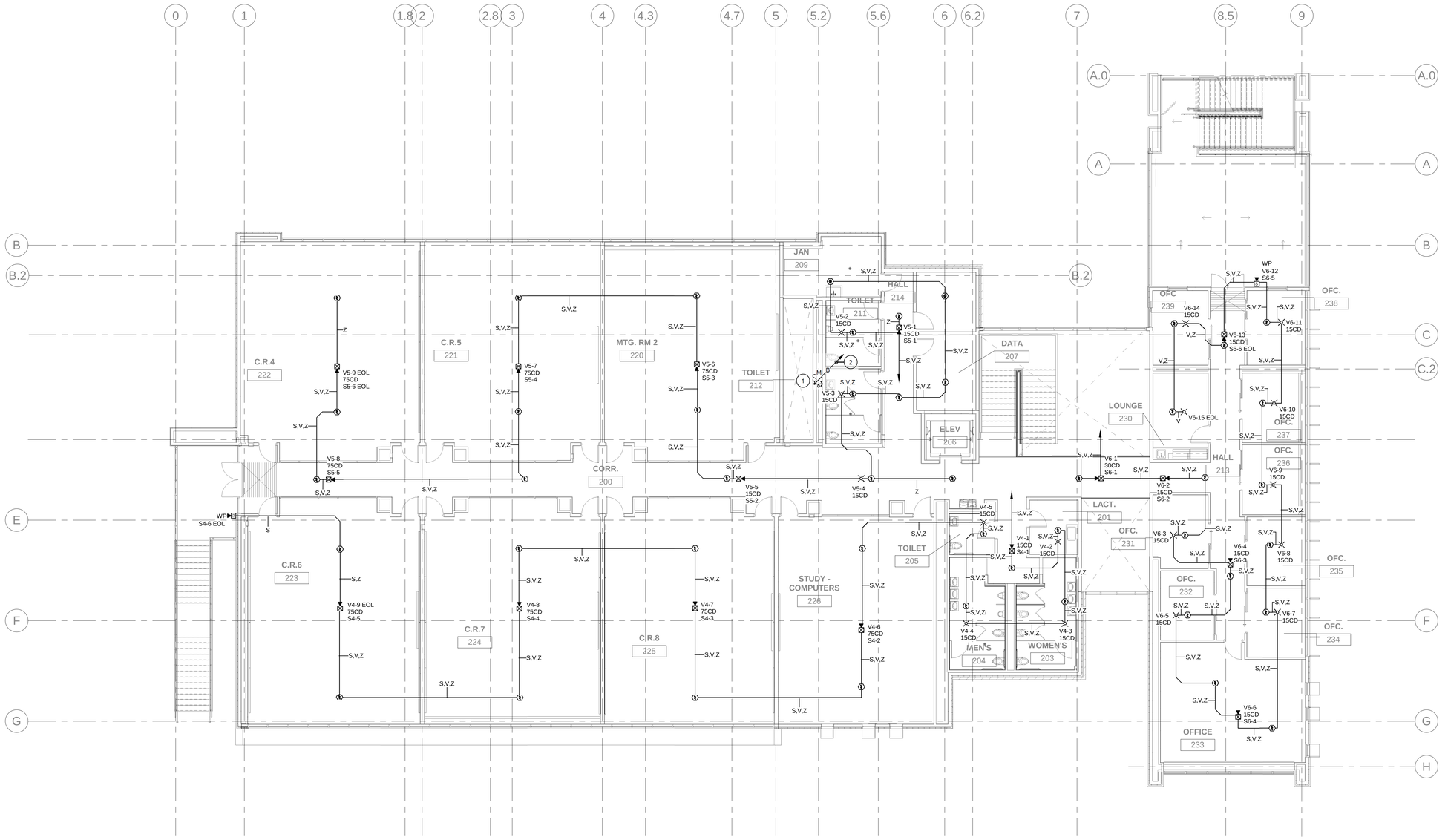

SECOND FLOOR FIRE ALARM PLAN

SCALE 1/8" = 1'-0" (1)

FIRE ALARM CONDUIT SCHEDULE

FIRE ALARM CONDUIT SCHEDULE

SYMBOL	CONDUCTORS (BELDEN 5020U2 OR EQUAL)	SIZE
——I——	2#16 UNSHIELDED TWISTED-PAIR INITIATING CIRCUIT	3/4"C.
——V——	2#12 THWN CU. VISUAL CIRCUIT	3/4"C.
——S——	2#18 SHIELDED TWISTED-PAIR SPEAKER CIRCUIT	3/4"C.
——2V——	4#12 THWN CU. VISUAL CIRCUIT	3/4"C.
——2S——	4#18 SHIELDED TWISTED-PAIR SPEAKER CIRCUIT	3/4"C.
—I,2V,2S—	MUTIPLE CONDUCTORS SHALL BE SHARED	1"C.
B	2#14 FPLP (INITIATION CKT., MISC. CKT.)	3/4"C.

UNDERGROUND CABLES SHALL BE USED
UNDERGROUND RATED CABLES

PLAN NOTES

1. PROVIDE CONNECTION TO SMOKE FIRE DAMPER AS REQUIRED. VERIFY EXACT LOCATION AND QUANTITY WITH MECHANICAL DRAWINGS PRIOR TO ROUGH-IN.
2. TO CONTROL MODULE AT ELECTRICAL ROOM.

4/8/2019 4:15:27 PM

IDENTIFICATION STAMP
DIV. OF THE STATE ARCHITECT
APP. 03-119458 INC:
REVIEWED FOR
SS ☑ FLS ☑ ACS ☑
DATE:05/23/2019

DIVISION OF THE STATE ARCHITECT
355 South Grand Avenue, Suite 2100
Los Angeles, CA 90012
ph: (213) 897-3995 fx:(213) 897-3159

agency

tBP architecture planning interiors

tBP/Architecture
4611 Teller Avenue
Newport Beach, CA 92660
ph: 949.673.0300 fx: 949.732.3895

architect

FBAEngineering
Consulting Electrical Engineers
150 Nations Avenue Suite A120
Fullerton, California 92832
tel:(562)799-5972 (949)852.1697 (fax)
fba@fbaengineering.com
FBA Job Number 212.227

consultant

COMPTON COLLEGE
INSTRUCTIONAL BUILDING No.2
COMPTON COMMUNITY COLLEGE DISTRICT
1111 E. ARTESIA BLVD. COMPTON, CA.

owner

tBP project number: 20998.00
file name:
drawn by: checked by:
date: 04 / 08 / 2019

rev:	date:	description:

THIS DRAWING AND THE DESIGNS, DEPICTIONS, IDEAS AND OTHER INFORMATION CONTAINED HEREIN CONSTITUTE UNPUBLISHED WORK OF tBP/ARCHITECTURE AND SHALL REMAIN PROPERTY OF tBP/ARCHITECTURE IN PERPETUITY. NO PART THEREOF SHALL BE REPRODUCED, DISCLOSED, DISTRIBUTED, SOLD, PUBLISHED OR OTHERWISE USED IN ANY WAY WITHOUT THE ADVANCED EXPRESS WRITTEN CONSENT OF tBP/ARCHITECTURE.

drawing title:
SECOND FLOOR FIRE ALARM PLAN

drawing
EF-2.1
drawing of

DEVICE SCHEDULE

1	DOOR HEADER JUNCTION BOX	DOOR HEADER JUNCTION BOX FOR HYBRID/COMPOSITE CABLE BREAKOUT AND OTHER CONNECTIONS AS REQUIRED. SIZE VERIFIED AND ENCLOSURE PROVIDED BY SECURITY CONTRACTOR.
2	CARD READER	CARD READER - SURFACE MOUNTED TO 4S JUNCTION BOX WITH 1 GANG VERTICAL MUD RING @42" AFF ON UNSECURED SIDE, REFER TO RISER DIAGRAM FOR CABLE TYPE.
3	DOOR CONTACTS	EXTERNAL DOOR CONTACT EMBEDDED IN DOOR FRAME 6" FROM DOOR EDGE. REFER TO RISER DIAGRAM FOR CABLE TYPE.
4	HINGE	POWER TRANSFER HINGE - LOCK POWER, REX, DOOR POS. STATUS.
5	REX	REX-EXTERNAL-PIR SENSOR ON HORIZ. 1G CENTERED 12" ABOVE DOOR ON SECURE SIDE. REFER TO RISER DIAGRAM FOR CABLE TYPE.
6	ELECTRIFIED DOOR HARDWARE	ELECTRIFIED DOOR HARDWARE - MORTISE OR CYLINDRICAL LEVER/LOCK SET - EGRESS FROM SECURE SIDE. REFER TO RISER DIAGRAM FOR CABLE TYPE.
7	SUPERVISION	NO / NC (4)STATE END-OF-LINE.
8	LOCKING HARDWARE POWER SUPPLY	LOCKING HARDWARE POWER SUPPLY-REQUIRES 120VAC, 20A DEDICATED CIRCUIT IN EMT. CODE REQUIRES LOCATION WITHIN 30 FEET OF DOOR. MULTIPLE DOORS CAN BE SERVED WHERE DISTANCE PERMITS
9	LOCAL DOOR ALARM	

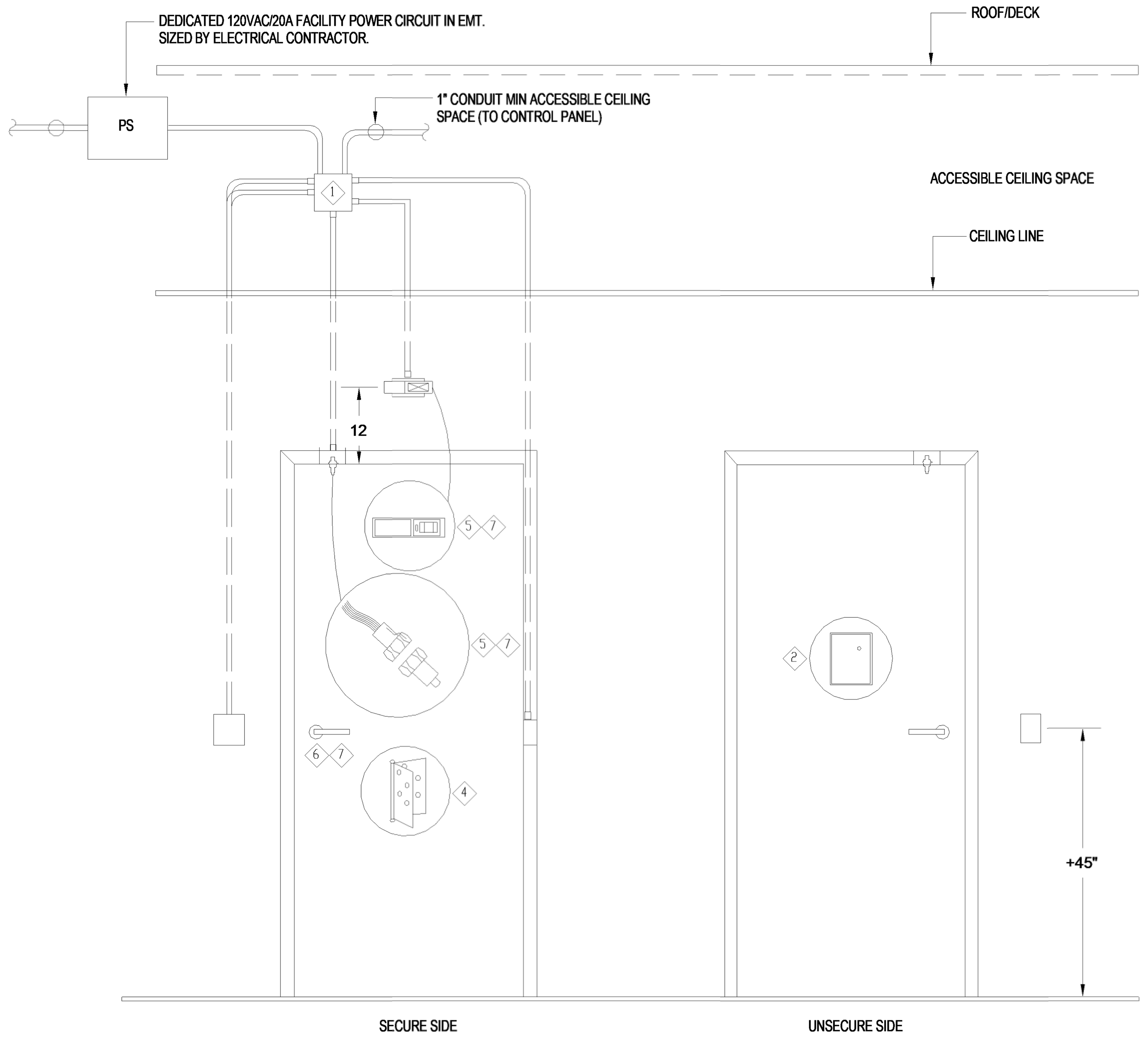

1. DETAIL IS DIAGRAMMATIC ONLY. REFER TO ARCHITECTURAL DOOR HARDWARE LIST FOR DETAILS.
2. COORDINATE WITH OTHERS TRADES TO DELIVER A COMPLETE, FUNCTIONAL SYSTEM
3. ALL CONDUIT SHALL BE 3/4" EMT COMPLETE WITH BUSHING AND PULLSTRINGS.
4. CONTRACTOR SHALL COORDINATE WITH DIVISION 8 DOOR HARDWARE CONTRACTOR AND REFERENCE ARCHITECTURAL DRAWINGS FOR DOOR HARDWARE SCHEDULE DETAIL.

TYPICAL SINGLE DOOR ACCESS CONTROL DETAIL — SCALE N.T.S. — 1

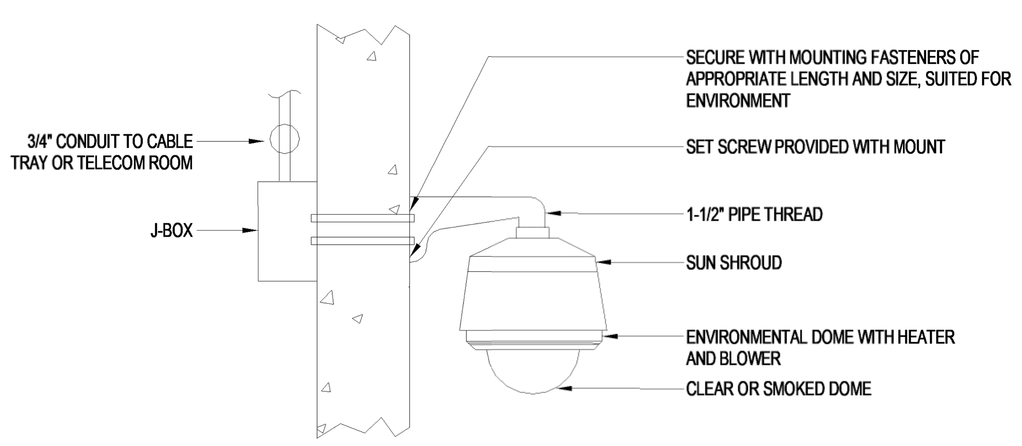

EXTERIOR WALL MOUNT CAMERA — SCALE N.T.S. — 2

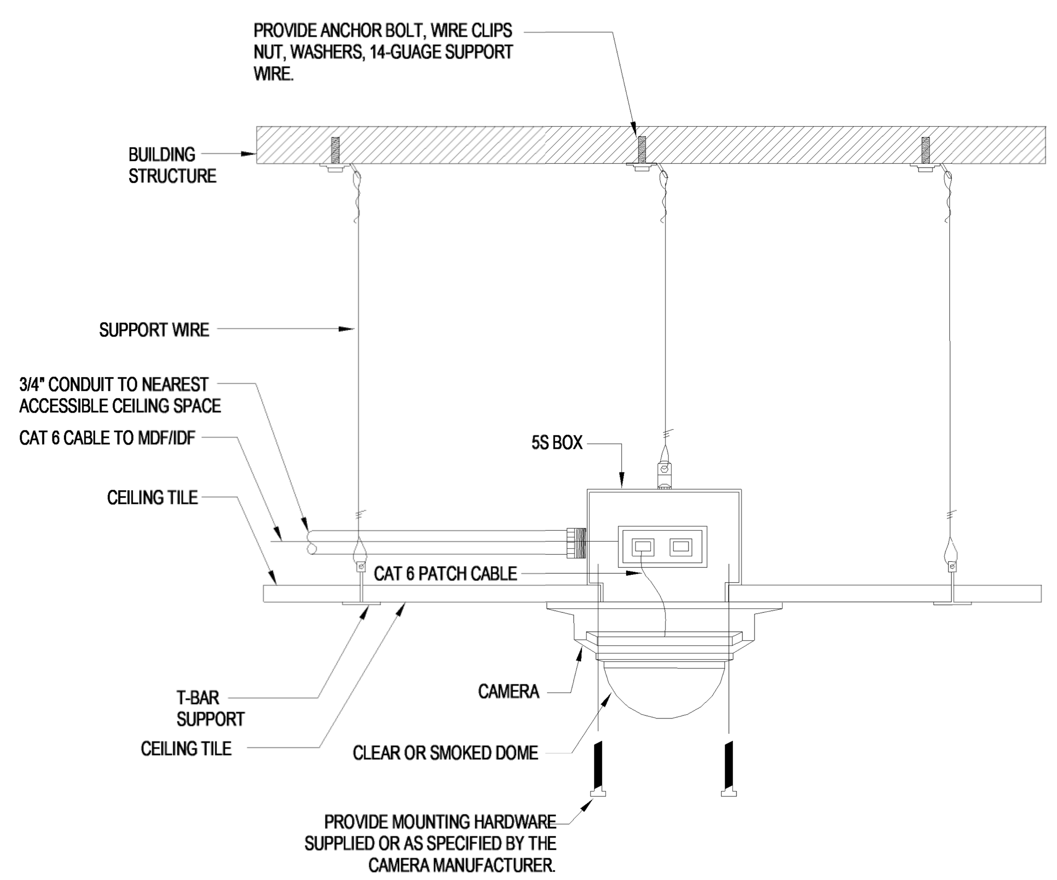

DROP TILE MOUNT CAMERA — SCALE N.T.S. — 3

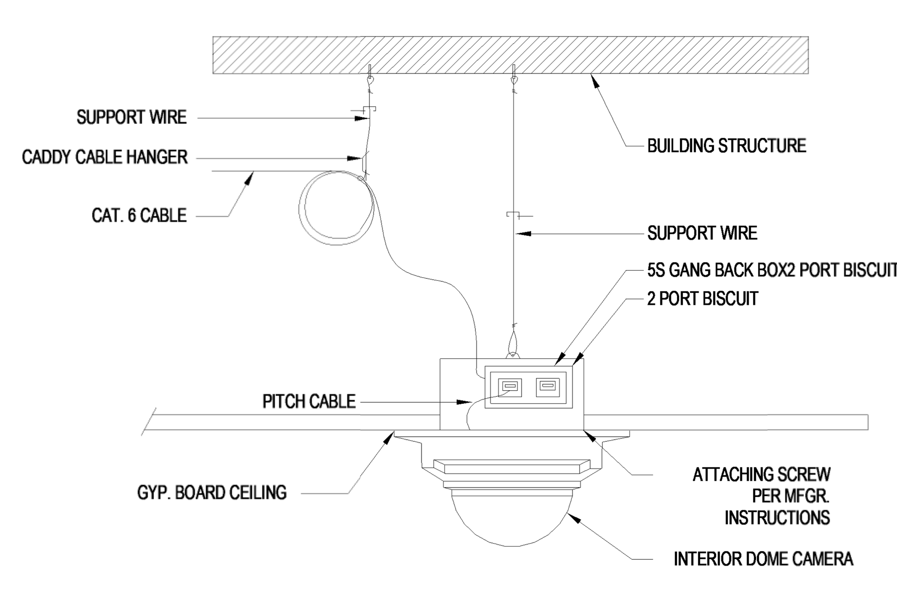

HARD LID MOUNT CAMERA — SCALE N.T.S. — 4

4/8/2019 4:15:29 PM

TELECOM SYMBOL LIST

— TV —	TELEVISION/COAX SYSTEM - 1"C. WITH COAX CABLES AS SPECIFIED.
— M1 —	MICROPHONE SYSTEM - 3/4"C. WITH CABLING AS SPECIFIED. M2 - 1"C. WITH CABLING AS SPECIFIED. M3 - 1 1/4"C. WITH CABLING AS SPECIFIED. M4 - (2) 1"C. WITH CABLING AS SPECIFIED.
— ID —	INTRUSION DETECTION SYSTEM - 3/4"C., WITH INTRUSION DETECTION SYSTEM CABLING AS SPECIFIED.
— 1V —	TELEPHONE/VOICE SYSTEM - 3/4"C. WITH ONE (1) TELEPHONE SYSTEM CABLE AS SPECIFIED. 2V - 1"C. WITH TWO (2) TELEPHONE SYSTEM CABLES AS SPECIFIED. 3V - 1 1/4"C. WITH THREE (3) TELEPHONE SYSTEM CABLES AS SPECIFIED. 4V - 1 1/4"C. WITH FOUR (4) TELEPHONE SYSTEM CABLES AS SPECIFIED.
— P —	PUBLIC ADDRESS SYSTEM - 3/4"C., WITH PA SYSTEM CABLING AS SPECIFIED.
— AV —	A/V SYSTEM - PROVIDE 1-1/2"C FROM AV CONTROLLER TO SWITCH AT PROJECTOR ON DISPLAY.
— 1D —	COMPUTER/DATA PROCESSING SYSTEM - 1"C., WITH ONE (1) DATA NETWORK CABLE AS SPECIFIED. 2D - 1"C. WITH TWO (2) DATA NETWORK CABLES AS SPECIFIED. 3D - 1 1/4"C. WITH THREE (3) DATA NETWORK CABLES AS SPECIFIED. 4D - 1 1/4"C. WITH FOUR (4) DATA NETWORK CABLES AS SPECIFIED.
1D	COMPUTER/DATA OUTLET ON FLUSH IN WALL OUTLET BOX, +18 IN. AFF., UNO. PROVIDE AND INSTALL ONE (1) DATA NETWORK OUTLET CONNECTOR, COVERPLATE, OUTLET BOX AND MINIMUM 1 IN. CONDUIT CONCEALED IN WALL TO ABOVE THE ACCESSIBLE CEILING SPACE. PROVIDE AND INSTALL INSULATED THROAT BUSHINGS. PROVIDE AND INSTALL ONE (1) DATA NETWORK CABLE AS SPECIFIED FROM OUTLET, THROUGH CONDUIT TO ABOVE THE CEILING AND ON TO THE RESPECTIVE BDF/IDF.
2D	COMPUTER/DATA OUTLET ON FLUSH IN WALL OUTLET BOX, +18 IN. AFF. UNO. PROVIDE AND INSTALL TWO (2) DATA NETWORK OUTLET CONNECTORS, COVERPLATE, OUTLET BOX AND MINIMUM 1 IN. CONDUIT CONCEALED IN WALL TO ABOVE THE ACCESSIBLE CEILING SPACE. PROVIDE AND INSTALL INSULATED THROAT BUSHINGS. PROVIDE AND INSTALL TWO (2) DATA NETWORK CABLES AS SPECIFIED FROM OUTLET, THROUGH CONDUIT TO ABOVE THE CEILING AND ON TO THE RESPECTIVE BDF/IDF.
3D	COMPUTER/DATA OUTLET ON FLUSH IN WALL OUTLET BOX, +18 IN. AFF. UNO. PROVIDE AND INSTALL THREE (3) DATA NETWORK OUTLET CONNECTORS, COVERPLATE, OUTLET BOX AND MINIMUM 1.25 IN. CONDUIT CONCEALED IN WALL TO ABOVE THE ACCESSIBLE CEILING SPACE. PROVIDE AND INSTALL INSULATED THROAT BUSHINGS. PROVIDE AND INSTALL THREE (3) DATA NETWORK CABLES AS SPECIFIED FROM OUTLET, THROUGH CONDUIT TO ABOVE THE CEILING AND ON TO THE RESPECTIVE BDF/IDF.
4D	COMPUTER/DATA OUTLET ON FLUSH IN WALL OUTLET BOX, +18 IN. AFF. UNO. PROVIDE AND INSTALL (4) DATA NETWORK OUTLET CONNECTORS, COVERPLATE, OUTLET BOX AND MINIMUM 1.25 IN. CONDUIT CONCEALED IN WALL TO ABOVE THE ACCESSIBLE CEILING SPACE. PROVIDE AND INSTALL INSULATED THROAT BUSHINGS. PROVIDE AND INSTALL FOUR (4) DATA NETWORK CABLES AS SPECIFIED FROM OUTLET, THROUGH CONDUIT TO ABOVE THE CEILING AND ON TO THE RESPECTIVE BDF/IDF.
6D	COMPUTER/DATA OUTLET ON FLUSH IN WALL OUTLET BOX, +18 IN. AFF. UNO. PROVIDE AND INSTALL SIX (6) DATA NETWORK OUTLET CONNECTORS, COVERPLATE, OUTLET BOX AND MINIMUM 1.25 IN. CONDUIT CONCEALED IN WALL TO ABOVE THE ACCESSIBLE CEILING SPACE. PROVIDE AND INSTALL INSULATED THROAT BUSHINGS. PROVIDE AND INSTALL SIX (6) DATA NETWORK CABLES AS SPECIFIED FROM OUTLET, THROUGH CONDUIT TO ABOVE THE CEILING AND ON TO THE RESPECTIVE BDF/IDF.
1T	TELEPHONE OUTLET IN FLUSH IN WALL OUTLET BOX, +45 IN. AFF UNO. PROVIDE AND INSTALL HANDSET, VOICE OUTLET CONNECTOR, OUTLET BOX AND 1 IN. CONDUIT CONCEALED IN WALL TO ABOVE THE ACCESSIBLE CEILING. PROVIDE AND INSTALL ONE (1) DATA NETWORK CABLE AS SPECIFIED FROM THE OUTLET, IN CONDUIT AND TERMINATE AT THE RESPECTIVE BDF/IDF.
1D AP	WIRELESS ACCESS POINT AT CEILING. PROVIDE AND INSTALL ACCESS POINT, ONE (1) DATA NETWORK CABLE WITH 15 FOOT SERVICE LOOPS, BACK TO THE RESPECTIVE BDF/IDF. INSTALL ACCESS POINT IN ACCORDANCE WITH THE EQUIPMENT MANUFACTURERS INSTALLATION REQUIREMENTS.
1D AP	WIRELESS ACCESS POINT, WALL MOUNTED AT +90 IN. UNO. PROVIDE AND INSTALL ACCESS POINT, ONE (1) DATA NETWORK CABLE WITH 20 FOOT SERVICE LOOP, BACK TO THE RESPECTIVE BDF/IDF. INSTALL ACCESS POINT IN ACCORDANCE WITH THE EQUIPMENT MANUFACTURERS INSTALLATION REQUIREMENTS. OUTDOOR LOCATIONS SHALL BE WEATHERPROOF.
1D P	COMPUTER/DATA OUTLET CONNECTOR AT CEILING AND CONNECTION TO IN CEILING AV AMPLIFIER AND PROJECTION SYSTEM. INSTALL IN ACCORDANCE WITH THE AV SYSTEM MANUFACTURERS REQUIREMENTS.
"E"	DESIGNATION INDICATES DEDICATED TELEPHONE LINES FOR ELEVATOR.
M	INTERCOM MICROPHONE ON FLUSH CEILING MOUNTED OUTLET BOX.
S	AUDIO ENHANCEMENT SPEAKER IN FLUSH CEILING MOUNTED BACKBOX.
(clock)	12.5" DIA. ANALOG SELF CORRECTING 120V. OPERATED CLOCK, +90" A.F.F. REFER TO ARCHITECTURAL INTERIOR ELEVATIONS FOR EXACT LOCATIONS AND MOUNTING HEIGHTS.
+45"	MOUNTING HEIGHT TO CENTER LINE OF DEVICE FROM FINISH FLOOR OR EXTERIOR GRADE
1	PLAN NOTE CALLOUT. REFER TO CORRESPONDING NOTE ON DRAWING WHERE CALLOUT OCCURS.
WP	WEATHERPROOF EXTERIOR LONG THROW PUBLIC ADDRESS HORN SPEAKER, WALL MOUNTED.
AV	AV CONNECTOR PLATE ON FLUSH IN WALL OUTLET BOX, +90 IN. AFF UNO. INSTALL IN FLUSH IN WALL BOX, SIZE PER MANUFACTURERS REQUIREMENTS, AT LCD DISPLAY LOCATION. PROVIDE 1.25 IN. CONDUIT TO ABOVE THE ACCESSIBLE CEILING. PROVIDE AV CABLING AS SPECIFIED.
AV P	AV IN CEILING AMPLIFIER NEAR PROJECTOR LOCATION AS SPECIFIED FOR TERMINATION/CONNECTION OF AV AND PROJECTION SYSTEM. PROVIDE AND INSTALL COMPLETE AS SPECIFIED AND IN ACCORDANCE WITH THE EQUIPMENT MANUFACTURERS REQUIREMENTS.
TC	AUDIO/VIDEO CONTROL PANEL, ON FLUSH IN WALL MOUNTED OUTLET BOX, +45"A.F.F. LOCATED AT INSTRUCTOR'S DESK. PROVIDE CONTROL PANEL, OUTLET BOX AND 1" CONDUIT CONCEALED IN WALL TO THE AV CONNECTOR PLATE. AT +18"A.F.F. PROVIDE AV CABLING BETWEEN AV CONTROL PANEL AND AV CONNECTOR PLATE IN ACCORDANCE WITH THE AV SYSTEM REQUIREMENTS.
TV	TELEVISION/COAX OUTLET ON FLUSH IN WALL OUTLET, +60"U.O.N.
G	GLASS BREAK DETECTOR.
K	INTRUSION DETECTION KEY PAD, ON FLUSH WALL MOUNTED OUTLET BOX, +45".
C	INTRUSION DETECTION SYSTEM DOOR CONTACT SWITCH. INSTALL IN ACCORDANCE WITH THE MANUFACTURER'S REQUIREMENTS.
S	MINI INTRUSION SIREN
ID	INTRUSION DETECTION OCCUPANCY MOTION SENSOR, ON FLUSH CEILING MOUNTED OUTLET BOX.
P	INTRUSION PANIC BUTTON IN FLUSH IN WALL OUTLET BOX, +45".
M	MICROPHONE OUTLET, ON FLUSH WALL MOUNTED OUTLET BOX, +18".
E	ASSISTIVE LISTENING SYSTEM EMITTER, +90".
VP	HANDS-FREE IP CALL BOX, FLUSH WALL MOUNT, +45".
S 1D	INDOOR PUBLIC ADDRESS SPEAKER. PROVIDE AND INSTALL ON FLUSH IN CEILING BACKBOX. PROVIDE AND INSTALL ONE (1) DATA NETWORK CABLE ABOVE THE CEILING FROM THE SPEAKER TO THE RESPECTIVE BDF/IDF.
CR	ACCESS CONTROL CARD READER. PROVIDE AND INSTALL IN FLUSH IN WALL OUTLET BOX, +45 IN. AFF. PROVIDE AND INSTALL A .75 IN. CONDUIT CONCEALED IN WALL TO THE CONTROLLER/POWER SUPPLY ABOVE THE ACCESSIBLE CEILING. SEE SPECIFICATIONS.
J F	COMPUTER/DATA NETWORK FURNITURE FEED WALL MOUNTED JUNCTION BOX, +18 IN. AFF UNO. PROVIDE AND INSTALL JUNCTION BOX, SEAL TITE FLEX CONDUIT, 1.25 IN. MINIMUM AND CONNECTION TO THE FURNITURE SYSTEM. PROVIDE AND INSTALL OUTLET BOX(ES) SIZED TO ACCOMMODATE THE QUANTITY OF CABLES INDICATED. PROVIDE QUANTITY OF 1.25 IN. CONDUITS FROM JUNCTION BOX, CONCEALED IN WALL TO ABOVE THE ACCESSIBLE CEILING. PROVIDE AND INSTALL ONE (1) 1.25 IN. CONDUIT FOR EVERY SIX (6) DATA NETWORK CABLES REQUIRED. TERMINATE CABLES AT THE RESPECTIVE BDF/IDF.
C	INDOOR CLOSED-CIRCUIT TELEVISION CAMERA, CEILING MOUNTED. PROVIDE AND INSTALL CCTV CAMERA AS SPECIFIED, CEILING OUTLET BOX AND ONE (1) DATA NETWORK CABLE FROM CAMERA TO THE RESPECTIVE BDF/IDF. PROVIDE 20 FOOT CABLE SERVICE LOOP AT CAMERA LOCATION.
C	OUTDOOR CLOSED-CIRCUIT TELEVISION CAMERA, WALL MOUNT AT +108 IN. A.F.G. PROVIDE AND INSTALL CCTV CAMERA AS SPECIFIED, WEATHERPROOF WALL MOUNTED OUTLET BOX AND ONE (1) DATA NETWORK CABLE FROM CAMERA TO THE RESPECTIVE BDF/IDF. PROVIDE 20 FOOT CABLE SERVICE LOOP AT CAMERA LOCATION.
(floor box)	MULTI-SERVICE POWER/DATA FLUSH IN FLOOR BOX COMPLETE WITH FLUSH COVER. PROVIDE AND INSTALL MULTI SERVICE FLOOR BOX WITH QUANTITY OF DUPLEX POWER OUTLETS (SEE POWER PLANS) AND COMPUTER/DATA OUTLET CONNECTORS INDICATED. PROVIDE ONE (1) 1.25 IN. BELOW GRADE CONDUIT FOR EVERY FOUR (4) DATA OUTLET CONNECTORS AND CABLES INDICATED. PROVIDE AND INSTALL QUANTITY OF CABLES INDICATED AND TERMINATE AT THE RESPECTIVE BDF/IDF. PROVIDE ONE (1) DATA NETWORK TERMINATION DEVICE IN THE FURNITURE SYSTEM FOR EACH WORK STATION INDICATED AND CONNECT IN ACCORDANCE WITH THE FURNITURE SYSTEMS MANUFACTURERS REQUIREMENTS.
(floor box) AV	MULTI-SERVICE POWER/DATA/AUDIO VISUAL FLUSH IN FLOOR BOX COMPLETE WITH FLUSH COVER. PROVIDE AND INSTALL MULTI SERVICE FLOOR BOX WITH QUANTITY OF DUPLEX POWER OUTLETS (SEE POWER PLANS), COMPUTER/DATA OUTLET CONNECTORS AND AUDIO VIDEO CONNECTOR PLATES AS INDICATED. PROVIDE ONE (1) 1.25 IN. BELOW GRADE CONDUIT FOR EVERY FOUR (4) DATA OUTLET CONNECTORS AND CABLES INDICATED. PROVIDE AND INSTALL QUANTITY OF CABLES INDICATED AND TERMINATE AT THE RESPECTIVE BDF/IDF. FOR AV, PROVIDE AND INSTALL INSTRUCTOR'S AV CONNECTOR PLATE, ONE (1) 1.5 IN. CONDUIT FROM THE FLOOR BOX, TO THE WALL AND TO ABOVE THE ACCESSIBLE CEILING. PROVIDE HDMI/VGA CABLING, ETC. AS SPECIFIED.
PT	SIMILAR TO MULTI-SERVICE POWER/DATA FLUSH IN FLOOR BOX BUT POKE THROUGH DEVICE AT UPPER FLOORS. "PT" DESIGNATION INDICATES PROVIDE AND INSTALL POKE THROUGH DEVICE AS SPECIFIED.
AV PT	SIMILAR TO MULTI-SERVICE POWER/DATA/AV FLUSH IN FLOOR BOX BUT POKE THROUGH DEVICE AT UPPER FLOORS. "PT" DESIGNATION INDICATES PROVIDE AND INSTALL POKE THROUGH DEVICE AS SPECIFIED.

IDENTIFICATION STAMP
DIV. OF THE STATE ARCHITECT
APP. 03-119458 INC:
REVIEWED FOR
SS ☑ FLS ☑ ACS ☑
DATE:05/23/2019

DIVISION OF THE STATE ARCHITECT
355 South Grand Avenue, Suite 2100
Los Angeles, CA 90012
ph: (213) 897-3995 fx:(213) 897-3159
agency

tBP architecture planning interiors
tBP/Architecture
4611 Teller Avenue
Newport Beach, CA 92660
ph: 949.673.0300 fx: 949.732.3895
architect

FBA Engineering
Consulting Electrical Engineers
150 Paularino Avenue Suite A120
Costa Mesa, CA 92626
949.852.9995 • 949.852.1657 (fax)
fbaengr.com
FBA Job Number: 212.227
REGISTERED PROFESSIONAL ENGINEER STEVEN R. ZABCEK No. E 20372 Exp. 09-30-20 ELECTRICAL STATE OF CALIFORNIA
consultant

COMPTON COLLEGE
INSTRUCTIONAL BUILDING No.2
COMPTON COMMUNITY COLLEGE DISTRICT
1111 E. ARTESIA BLVD. COMPTON, CA.
owner

tBP project number: 20998.00
file name:
drawn by: checked by:
date: 04 / 08 / 2019
rev: date: description:

THIS DRAWING AND THE DESIGNS, DEPICTIONS, IDEAS AND OTHER INFORMATION CONTAINED HEREIN CONSTITUTE UNPUBLISHED WORK OF tBP/ARCHITECTURE AND SHALL REMAIN PROPERTY OF tBP/ARCHITECTURE IN PERPETUITY. NO PART THEREOF SHALL BE REPRODUCED, DISCLOSED, DISTRIBUTED, SOLD, PUBLISHED OR OTHERWISE USED IN ANY WAY WITHOUT THE ADVANCED EXPRESS WRITTEN CONSENT OF tBP/ARCHITECTURE.

drawing title:
TELECOM SYMBOL LIST

drawing
ET-0.1
drawing of

LOW VOLTAGE TASK RESPONSIBILITY MATRIX

ITEM	GC	EC	CC	AVC	SC
EQUIPMENT					
AV EQUIPMENT - AV SPEAKER SYSTEMS	Y			Z	
AV EQUIPMENT - ALL OTHER AV EQUIPMENT				X	
SECURITY EQUIPMENT AND CONFIGURATIONS					X
INFRASTRUCTURE / COMMISSIONING					
INTRA-BUILDING LOW VOLTAGE CONTINUOUS CONDUITS		X			
INTRA-BUILDING LOW VOLTAGE CONDUIT ID LABELING & PULL STRINGS		X			
BUILDING INTERIOR LOW VOLTAGE BACK BOXES / CONDUIT		X			
TELECOM & AV FLOOR BOXES & POKE THRUS		X			
BDF/IDF ROOM CABLE TERMINATION HARDWARE			X		
BDF/IDF ROOM CABLE MANAGEMENT HARDWARE			X		
HORIZONTAL STATION CABLE			X		
BDF/IDF ROOM CABLE RUNWAY			X		
BDF/IDF ROOM & AV ROOM POWER		X			
INTRA-BUILDING GROUND SYSTEM TO TELECOM AND AV ROOMS		X			
TELECOM ROOM EQUIPMENT GROUNDING			X		
AV CABLING AND TERMINATION				X	
AV SYSTEM TEST, COMMISSIONING AND TRAINING				X	
SECURITY CONDUIT ID LABELING, PULL STRINGS		X			
SECURITY ROOM ACCESS POWER		X			
SECURITY SYSTEM CONDUIT AND PULLBOXES		X			
SECURITY CAMERA CABLING			X		
SECURITY ACCESS CONTROL CABLING					X
SECURITY ACCESS CONTROL CABLING SUPPORTS					X
SECURITY SYSTEM PROGRAMMING					X
SECURITY SYSTEM TEST, COMMISSIONING AND TRAINING					X
STRUCTURAL / SUPPORTS					
BDF/IDF ROOM BACKBOARDS	X				
LOW VOLTAGE/SECURITY ROOM BACKBOARDS	X				
BDF/IDF ROOM EQUIPMENT RACKS LADDER RACKS & BRACKETS			X		
SECURITY RACKS & BRACKETS					X
BACKING, BLOCKING & OTHER STRUCTURAL SUPPORTS FOR LOW VOLTAGE, AV, SECURITY EQUIPMENT	X				
DOOR LOCKING HARDWARE AND INSTALLATION	X				
MATRIX NOTES:					
X - PROVIDED AND FULLY INSTALLED/TEST BY TRADE ENTITY					
Y - PROVIDED AND PARTIALLY INSTALLED BY TRADE ENTITY PER SPECTIFICATION SECTION					
Z - FINAL ASSEMBLY, CABLE TERMINATION AND TESTING BY TRADE ENTITY PER SPECIFICATION SECTION					
GENERAL NOTES:					
1. GC = GENERAL CONTRACTOR					
2. SC = SECURITY CONTRACTOR					
3. EC = ELECTRICAL CONTRACTOR					
4. CC = CABLE CONTRACTOR					
5. AVC = AUDIO VISUAL CONTRACTOR					

ENLARGED KEY NOTES:

1. PROVIDE 8'-0" X 3/4" THICK FIRE TREATED PLYWOOD BACKBOARD, PAINT OFF WHITE PER DISTRICT'S IT STANDARDS.
2. PROVIDE 18" WIDE X 4" DEEP LADDER RACK CABLE TRAY SYSTEM. SEISMIC BRACE ALL CABLE RACEWAYS AND RACKS USING 1/2" ALL THREAD TO CEILING STRUCTURE PER MANUFACTURER'S INSTRUCTIONS AND CODE REQUIREMENTS.
3. PROVIDE CABLE WATERFALL TROUGHS OVER EACH RACK.
4. PROVIDE MAIN TECHNICAL GROUND BUS PER DETAIL 1/ET-0.5. BOND ALL METAL COMPONENTS TO THE TECHNICAL GROUND BUS. ALL RACKS TO BOND INDIVIDUALLY WITH MINIMUM #6 AWG CONDUCTOR. WALL MOUNT GROUND BUS ON WALL AT +7'-0".
5. ALL COMPONENTS TO COLOR MATCH (BLACK). SEE SPECIFICATIONS.
6. 24"W X 36"H X 6"D, SURFACE MOUNT.
7. DATA SYSTEM GROUND BUS. BOND ALL METAL COMPONENTS TO GROUND BUS, INCLUDING RACKS AND TERMINAL CABINET WITH MINIMUM #6 GROUND WIRE.

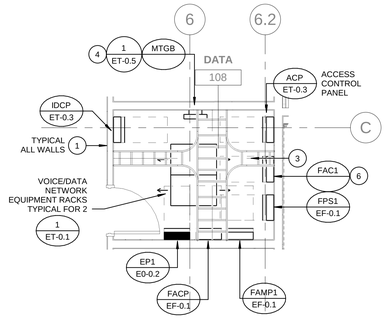

ENLARGED BDF ROOM - LEVEL 01 (1)
SCALE 1/4" = 1'-0"

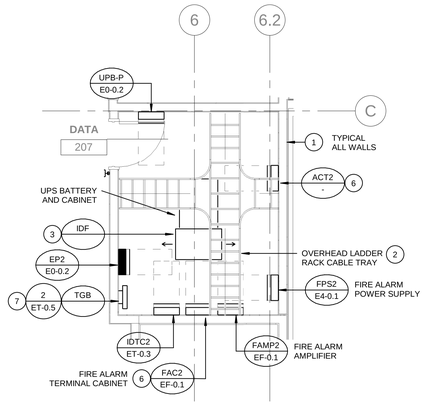

ENLARGED IDF ROOM - LEVEL 02 (2)
SCALE 1/4" = 1'-0"

4/8/2019 4:15:32 PM

IDENTIFICATION STAMP
DIV. OF THE STATE ARCHITECT
APP. 03-119458 INC:
REVIEWED FOR
SS ☑ FLS ☑ ACS ☑
DATE:05/23/2019

DIVISION OF THE STATE ARCHITECT
355 South Grand Avenue, Suite 2100
Los Angeles, CA 90012
ph: (213) 897-3995 fx:(213) 897-3159

agency

tBP
architecture
planning
interiors

tBP/Architecture
4611 Teller Avenue
Newport Beach, CA 92660
ph: 949.673.0300 fx: 949.732.3895

architect

REGISTERED PROFESSIONAL ENGINEER ★ WINNIE CHAN ★ No. E-18953 ★ ELECTRICAL ★ STATE OF CALIFORNIA

FBAEngineering
Consulting Electrical Engineers
150 Paularino Avenue Suite A120
Costa Mesa, CA 92626
949.852.0999 • 949.852.1697 (fax)
fbaeng.com
FBA Job Number: 212.227

consultant

COMPTON COLLEGE
INSTRUCTIONAL BUILDING No.2
COMPTON COMMUNITY COLLEGE DISTRICT
1111 E. ARTESIA BLVD. COMPTON, CA.

owner

tBP project number: 20998.00
file name:
drawn by: checked by:
date: 04 / 08 / 2019

rev:	date:	description:

THIS DRAWING AND THE DESIGNS, DEPICTIONS, IDEAS AND OTHER INFORMATION CONTAINED HEREIN CONSTITUTE UNPUBLISHED WORK OF tBP/ARCHITECTURE AND SHALL REMAIN PROPERTY OF tBP/ARCHITECTURE IN PERPETUITY. NO PART THEREOF SHALL BE REPRODUCED, DISCLOSED, DISTRIBUTED, SOLD, PUBLISHED OR OTHERWISE USED IN ANY WAY WITHOUT THE ADVANCED EXPRESS WRITTEN CONSENT OF tBP/ARCHITECTURE.

drawing title:
ENLARGED TELECOM ROOMS

drawing
ET-0.2
drawing of

BUILDING GROUNDING RISER DIAGRAM NOTES:

1. THE CABLE TRAY SHALL BE GROUNDED WITH 1#6 INSULATED GREEN COLORED GROUND CONDUCTOR RUN THE ENTIRE LEGHTH OF THE CABLE TRAY. EACH CABLE TRAY SECTION SHALL BE CONNECTED TO THE GROUNDING CONDUCTOR VIA A LAY-IN TYPE LUG.
2. GROUND BUS. SEE DETAILS ON SHEET E3-0.1.
3. PROVIDE 1#1/0 GRD. 1 1/2"C. TO EACH MDF RACK AND BOND AS REQUIRED.
4. DAISY CHAIN 1#1/0 GROUND BUS TO EACH FLOOR GROUND BUS.

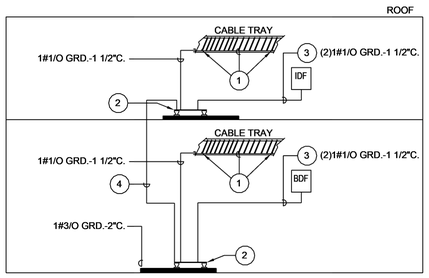

BUILDING GROUNDING RISER DIAGRAM | SCALE N.T.S. | E

NOTE:
ALL CABLE SHALL BE RISER RATED INSIDE OF BUILDING

REFERENCE SECTION 271000 FOR ADDITIONAL REQUIREMENTS

PLAN NOTES:

1. CONNECT TELEPHONE WIRES TO COMPUTER RACK PATCH PANEL AS REQUIRED.
2. TELEPHONE PUNCH DOWN BLOCK (66 TERMINAL BLOCKS). QUANTITY AS REQUIRED.
3. FIRE RESISTANT PLYWOOD BACKBOARD. SIZE/QUANTITY AS REQUIRED.

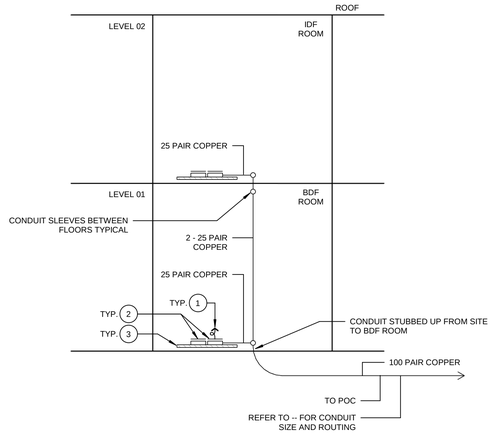

COPPER RISER DIAGRAM | SCALE N.T.S. | C

NOTE:
ALL CABLE SHALL BE RISER RATED INSIDE OF BUILDING

REFERENCE SECTION 271000 FOR ADDITIONAL REQUIREMENTS

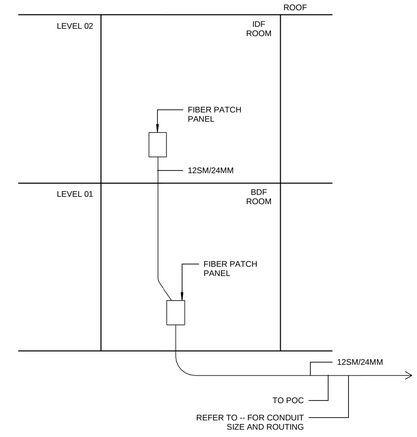

FIBER RISER DIAGRAM | SCALE N.T.S. | A

NOTE:
ALL CABLE SHALL BE RISER RATED INSIDE OF BUILDING

REFERENCE SECTION 271000 FOR ADDITIONAL REQUIREMENTS

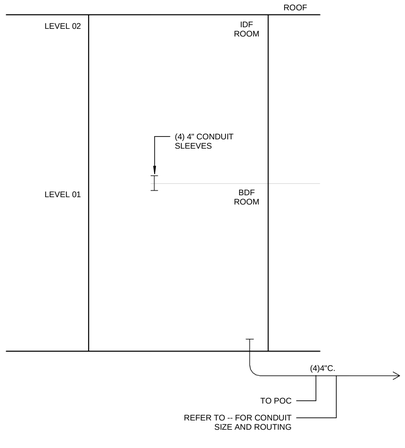

TELECOM CONDUIT RISER DIAGRAM | SCALE N.T.S. | D

NOTE:
ALL CABLE SHALL BE RISER RATED INSIDE OF BUILDING

REFERENCE SECTION 271000 FOR ADDITIONAL REQUIREMENTS

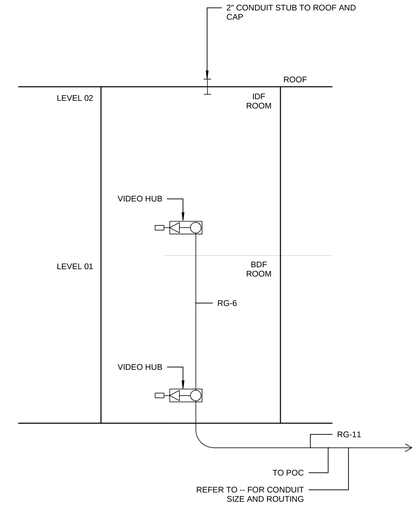

COAX RISER DIAGRAM | SCALE N.T.S. | B

IDENTIFICATION STAMP
DIV. OF THE STATE ARCHITECT
APP. 03-119458 INC:
REVIEWED FOR
SS ☑ FLS ☑ ACS ☑
DATE:05/23/2019

DIVISION OF THE STATE ARCHITECT
355 South Grand Avenue, Suite 2100
Los Angeles, CA 90012
ph: (213) 897-3995 fx:(213) 897-3159

agency

tBP architecture planning interiors

tBP/Architecture
4611 Teller Avenue
Newport Beach, CA 92660
ph: 949.673.0300 fx: 949.732.3895

architect

FBAEngineering
Consulting Electrical Engineers
150 Nations Avenue Suite A120
Long Beach, CA 90803
tel:562.799.9972 fax:562.799.9973
949.852.1997 (fax)
FBA Job Number 212.227

consultant

COMPTON COLLEGE
INSTRUCTIONAL BUILDING No.2

COMPTON COMMUNITY COLLEGE DISTRICT
1111 E. ARTESIA BLVD. COMPTON, CA.

owner

tBP project number: 20998.00
file name:
drawn by: checked by:
date: 04 / 08 / 2019

rev:	date:	description:

THIS DRAWING AND THE DESIGNS, DEPICTIONS, IDEAS AND OTHER INFORMATION CONTAINED HEREIN CONSTITUTE UNPUBLISHED WORK OF tBP/ARCHITECTURE AND SHALL REMAIN PROPERTY OF tBP/ARCHITECTURE IN PERPETUITY. NO PART THEREOF SHALL BE REPRODUCED, DISCLOSED, DISTRIBUTED, SOLD, PUBLISHED OR OTHERWISE USED IN ANY WAY WITHOUT THE ADVANCED EXPRESS WRITTEN CONSENT OF tBP/ARCHITECTURE.

drawing title:
TELECOM RISER DIAGRAMS

drawing
ET-0.3
drawing of

4/8/2019 4:15:34 PM

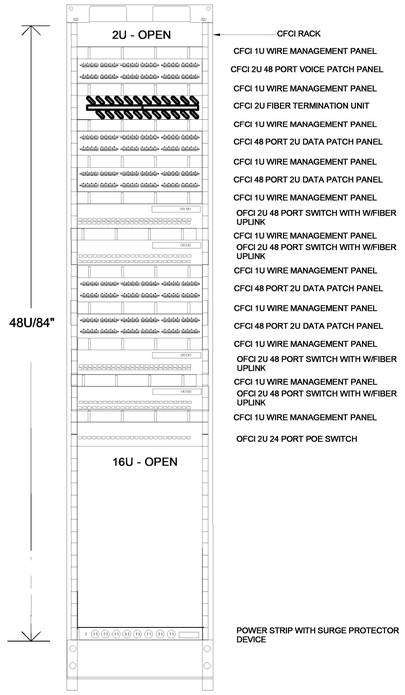

A IDF RACK ELEVATIONS

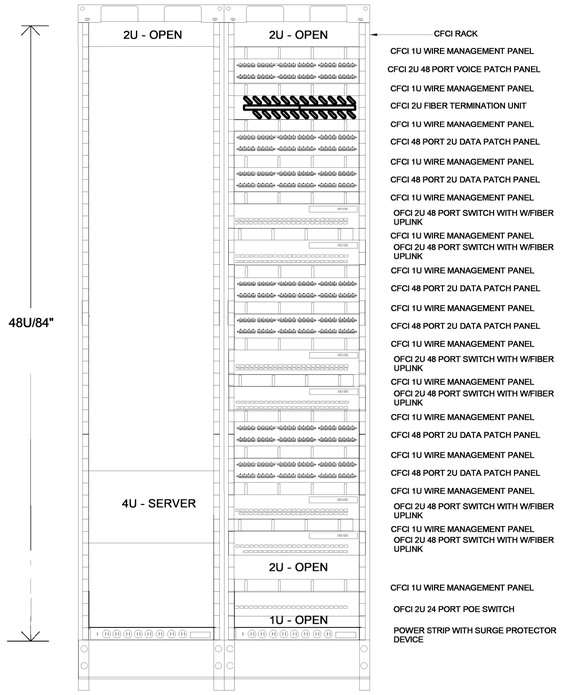

B BDF RACK ELEVATIONS

VERTICAL CABLE MANAGEMENT AS REQUIRED
Contractor-Furnished/Contractor-Installed

BOND THE RACK TO GROUND WITH #6AWG COPPER WIRE.

ENGINEER TO CUSTOMIZE DETAIL FOR NUMBER OF FIBER OPTIC PATCH AND CABLE MANAGEMENT EQUIPMENT AND ADD ONE ADDITIONAL COPPER SWITCH WHERE REQUIRED. ALWAYS MAINTAIN 6U SPACE FOR FUTURE EXPANSION. PROVIDE A SEPARATE RACK FOR CO-LOCATED IDF WHERE NECESSARY.

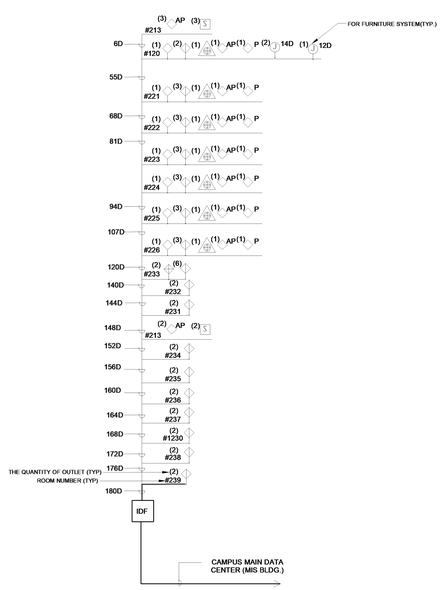

IDF-SECOND FLOOR

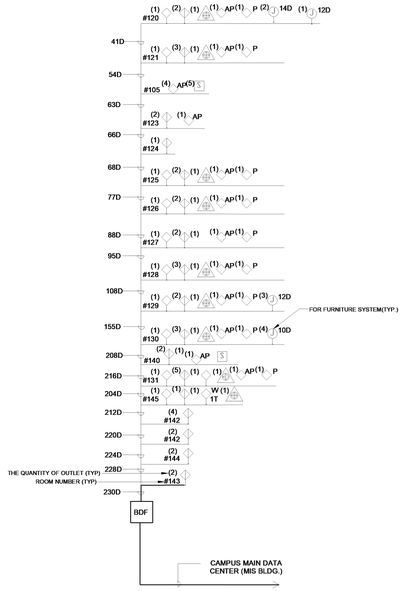

BDF-FIRST FLOOR

C COMPUTER/DATA NETWORK RISER DIAGRAM

4/8/2019 4:15:37 PM

IDENTIFICATION STAMP
DIV. OF THE STATE ARCHITECT
APP. 03-119458 INC:
REVIEWED FOR
SS ☑ FLS ☑ ACS ☑
DATE:05/23/2019

DIVISION OF THE STATE ARCHITECT
355 South Grand Avenue, Suite 2100
Los Angeles, CA 90012
ph: (213) 897-3995 fx:(213) 897-3159

agency

tBP
architecture
planning
interiors
tBP/Architecture
4611 Teller Avenue
Newport Beach, CA 92660
ph: 949.673.0300 fx: 949.732.3895

architect

FBAEngineering
Consulting Electrical Engineers
150 Nations Avenue, Suite A120
Long Beach, California 90803
949.852.0999 • 949.852.1697 (fax)
fbaeng.com
FBA Job Number: 212.227

consultant

owner

COMPTON COLLEGE
INSTRUCTIONAL BUILDING No.2
COMPTON COMMUNITY COLLEGE DISTRICT
1111 E. ARTESIA BLVD. COMPTON, CA.

tBP project number:	20998.00
file name:	
drawn by:	checked by:
date:	04 / 08 / 2019

rev:	date:	description:

THIS DRAWING AND THE DESIGNS, DEPICTIONS, IDEAS AND OTHER INFORMATION CONTAINED HEREIN CONSTITUTE UNPUBLISHED WORK OF tBP/ARCHITECTURE AND SHALL REMAIN PROPERTY OF tBP/ARCHITECTURE IN PERPETUITY. NO PART THEREOF SHALL BE REPRODUCED, DISCLOSED, DISTRIBUTED, SOLD, PUBLISHED OR OTHERWISE USED IN ANY WAY WITHOUT THE ADVANCED EXPRESS WRITTEN CONSENT OF tBP/ARCHITECTURE.

drawing title:
TELECOM DETAILS

drawing
ET-0.4
drawing of

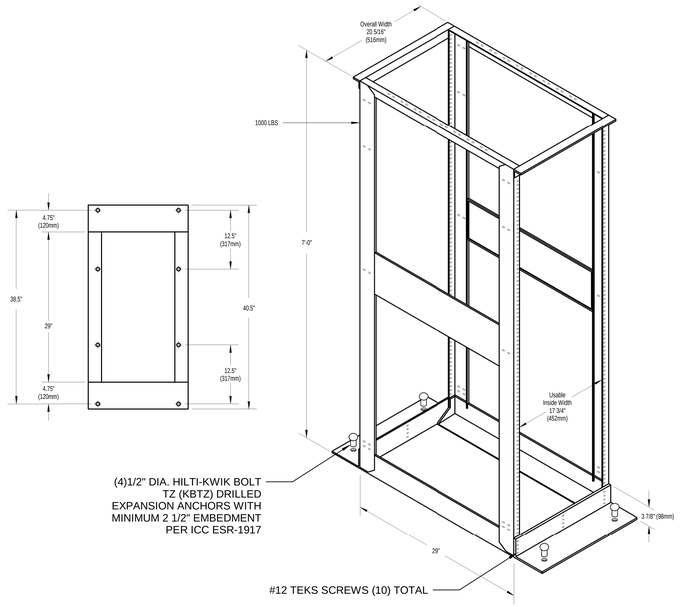

4 - POST RACK ANCHORAGE DETAIL

SCALE N.T.S. | 6

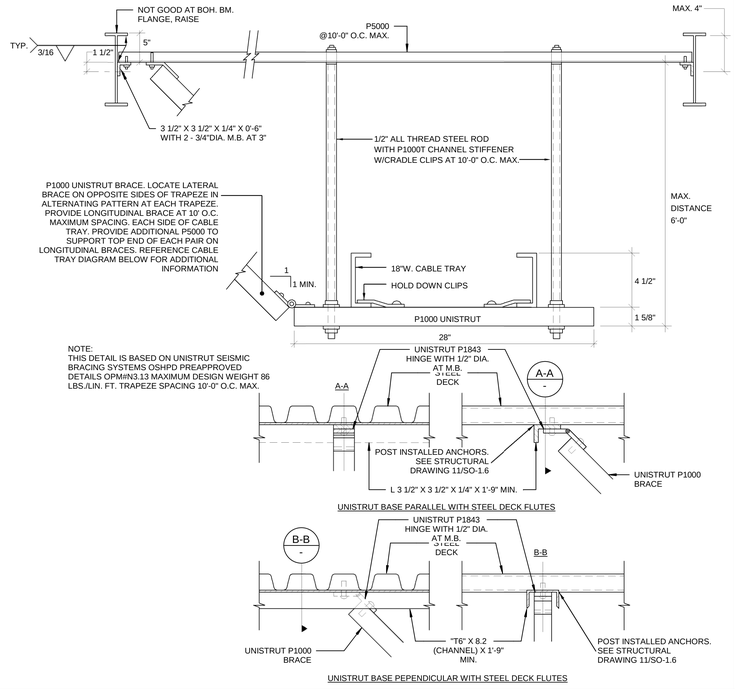

CABLE TRAY ANCHORAGE DETAIL

SCALE N.T.S. | 3

PERFORMANCE NOTES

1. REFER TO ARCHITECTURAL DRAWINGS AND ELEVATIONS FOR CASEWORK LOCATIONS AND INSTALL ALL OUTLETS IN MOUNTING HEIGHTS AND LOCATIONS AS DIRECTED BY THE ARCHITECT. VERIFY ALL MOUNTING HEIGHTS AND LOCATIONS PRIOR TO ROUGH-IN. CONTRACTOR SHALL INCLUDE ALL COSTS IN BID TO COMPLY WITH THIS PROVISION.

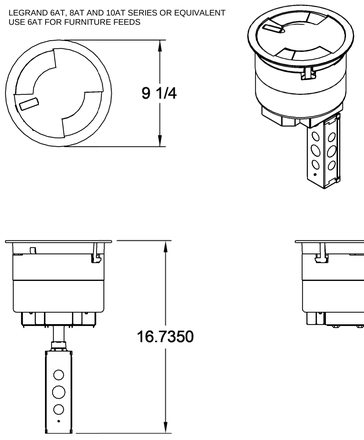

POKE-THRU DETAIL

SCALE N.T.S. | 5

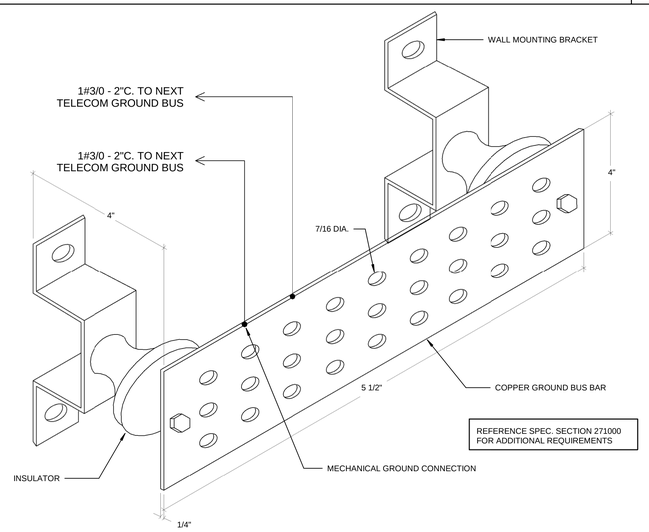

TECHNICAL GROUND BUS - ALL IDF'S

SCALE N.T.S. | 2

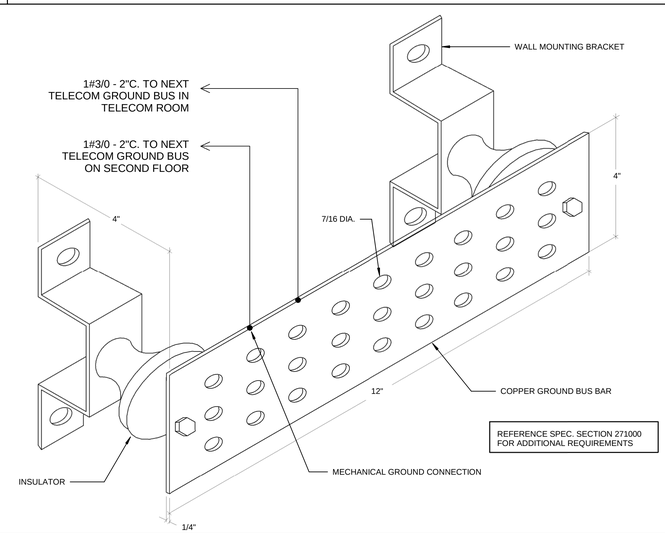

TECHNICAL GROUND BUS - BDF

SCALE N.T.S. | 1

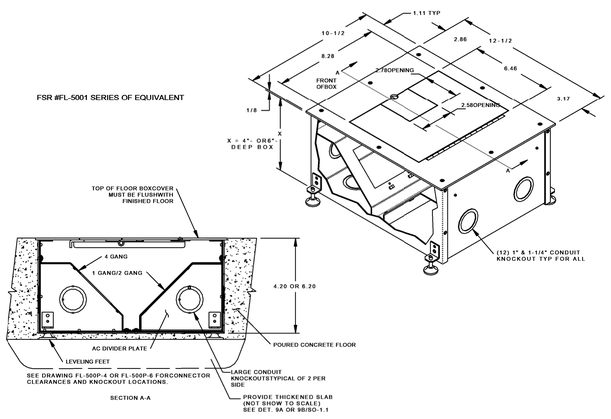

FLOOR BOX DETAIL

SCALE N.T.S. | 4

4/8/2019 4:15:39 PM

IDENTIFICATION STAMP
DIV. OF THE STATE ARCHITECT
APP. 03-119458 INC:
REVIEWED FOR
SS ☑ FLS ☑ ACS ☑
DATE:05/23/2019

DIVISION OF THE STATE ARCHITECT
355 South Grand Avenue, Suite 2100
Los Angeles, CA 90012
ph: (213) 897-3995 fx:(213) 897-3159

agency

tBP architecture planning interiors

tBP/Architecture
4611 Teller Avenue
Newport Beach, CA 92660
ph: 949.673.0300 fx: 949.732.3895

architect

FBAEngineering
Consulting Electrical Engineers
150 Paularino Avenue, Suite A120
Costa Mesa, California 92626
949.852.0999 • 949.852.1697 (fax)
www.fbaeng.com
FBA Job Number: 212.227

consultant

COMPTON COLLEGE
INSTRUCTIONAL BUILDING No.2
COMPTON COMMUNITY COLLEGE DISTRICT
1111 E. ARTESIA BLVD. COMPTON, CA.

owner

tBP project number: 20998.00
file name:
drawn by: checked by:
date: 04 / 08 / 2019

rev:	date:	description:

THIS DRAWING AND THE DESIGNS, DEPICTIONS, IDEAS AND OTHER INFORMATION CONTAINED HEREIN CONSTITUTE UNPUBLISHED WORK OF tBP/ARCHITECTURE AND SHALL REMAIN PROPERTY OF tBP/ARCHITECTURE IN PERPETUITY. NO PART THEREOF SHALL BE REPRODUCED, DISCLOSED, DISTRIBUTED, SOLD, PUBLISHED OR OTHERWISE USED IN ANY WAY WITHOUT THE ADVANCED EXPRESS WRITTEN CONSENT OF tBP/ARCHITECTURE.

drawing title:
TELECOM DETAILS

drawing
ET-0.5
drawing of

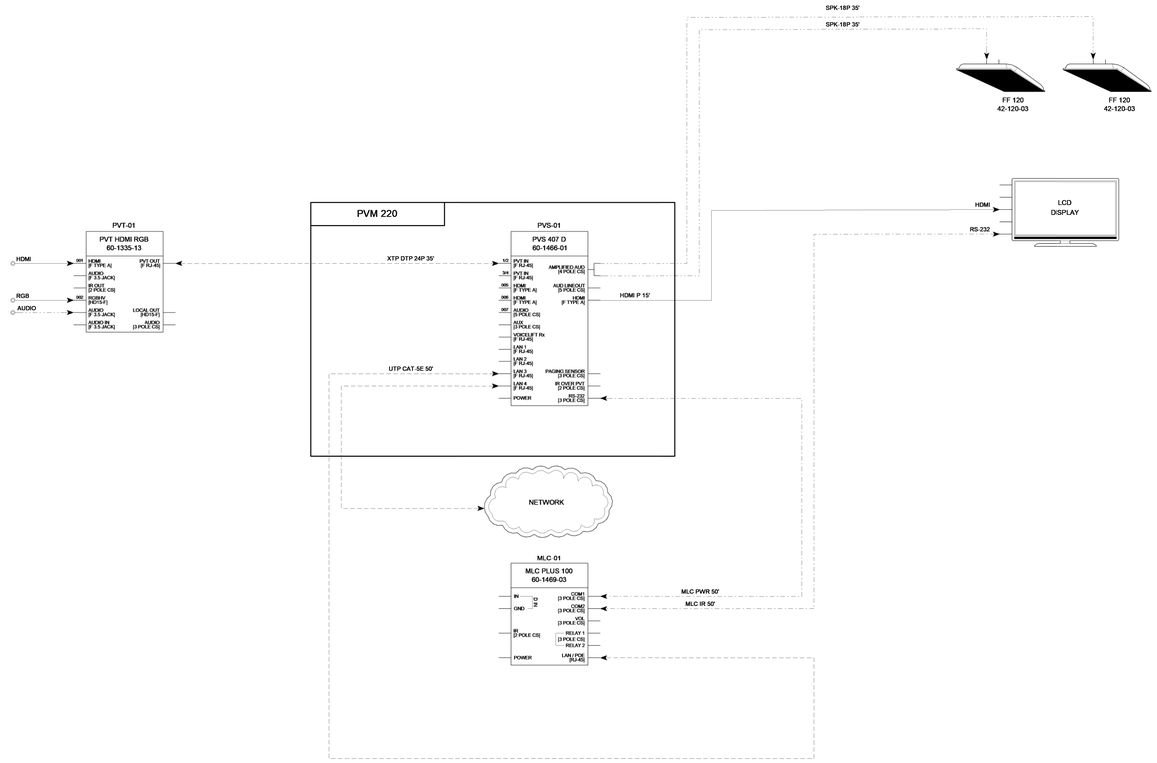

SMALL CONFERENCE ROOM | SCALE N.T.S. | 1

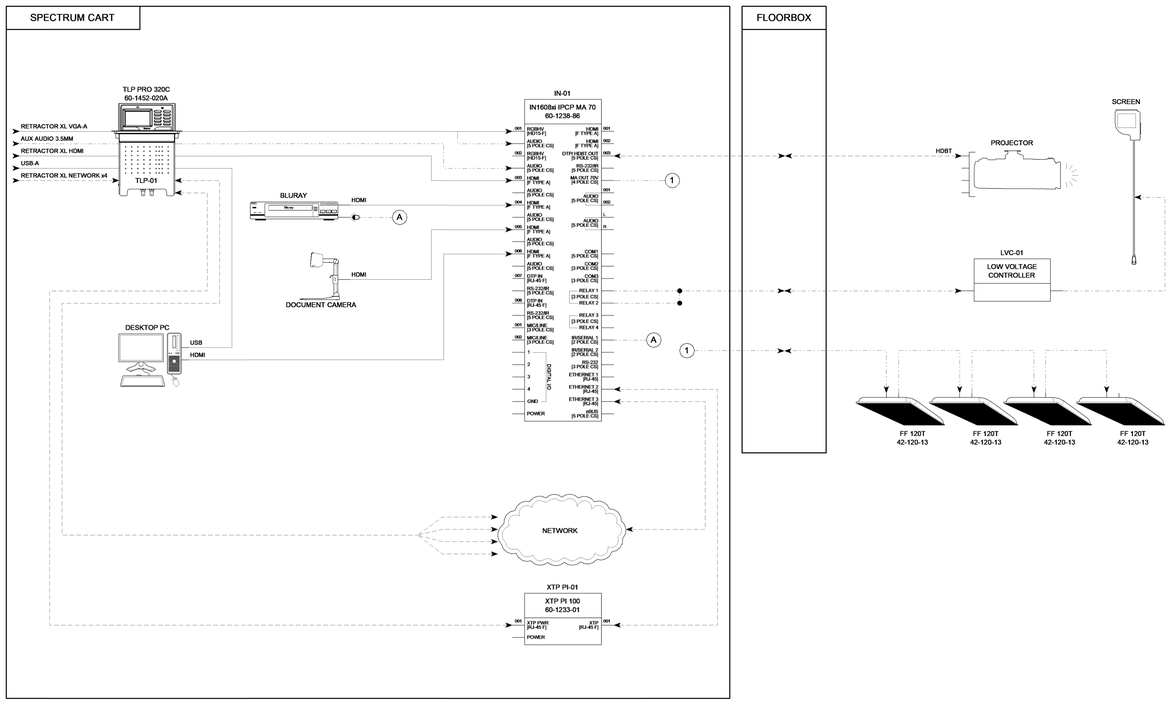

SMART CLASSROOM | SCALE N.T.S. | 2

IDENTIFICATION STAMP
DIV. OF THE STATE ARCHITECT
APP. 03-119458 INC:
REVIEWED FOR
SS ☑ FLS ☑ ACS ☑
DATE:05/23/2019

DIVISION OF THE STATE ARCHITECT
355 South Grand Avenue, Suite 2100
Los Angeles, CA 90012
ph: (213) 897-3995 fx:(213) 897-3159

agency

tBP architecture planning interiors

tBP/Architecture
4611 Teller Avenue
Newport Beach, CA 92660
ph: 949.673.0300 fx: 949.732.3895

architect

FBA Engineering
Consulting Electrical Engineers
150 Paularino Avenue Suite A120
Costa Mesa, CA 92626
949.852.9995 • 949.852.1657 (fax)
fbaengr.com
FBA Job Number: 212.227

consultant

COMPTON COLLEGE
INSTRUCTIONAL BUILDING No.2

COMPTON COMMUNITY COLLEGE DISTRICT
1111 E. ARTESIA BLVD. COMPTON, CA.

owner

tBP project number: 20998.00
file name:
drawn by: checked by:
date: 04 / 08 / 2019

rev:	date:	description:

THIS DRAWING AND THE DESIGNS, DEPICTIONS, IDEAS AND OTHER INFORMATION CONTAINED HEREIN CONSTITUTE UNPUBLISHED WORK OF tBP/ARCHITECTURE AND SHALL REMAIN PROPERTY OF tBP/ARCHITECTURE IN PERPETUITY. NO PART THEREOF SHALL BE REPRODUCED, DISCLOSED, DISTRIBUTED, SOLD, PUBLISHED OR OTHERWISE USED IN ANY WAY WITHOUT THE ADVANCED EXPRESS WRITTEN CONSENT OF tBP/ARCHITECTURE.

drawing title:
AV WIRING DIAGRAMS

drawing
ET-0.6
drawing of

4/8/2019 4:15:41 PM

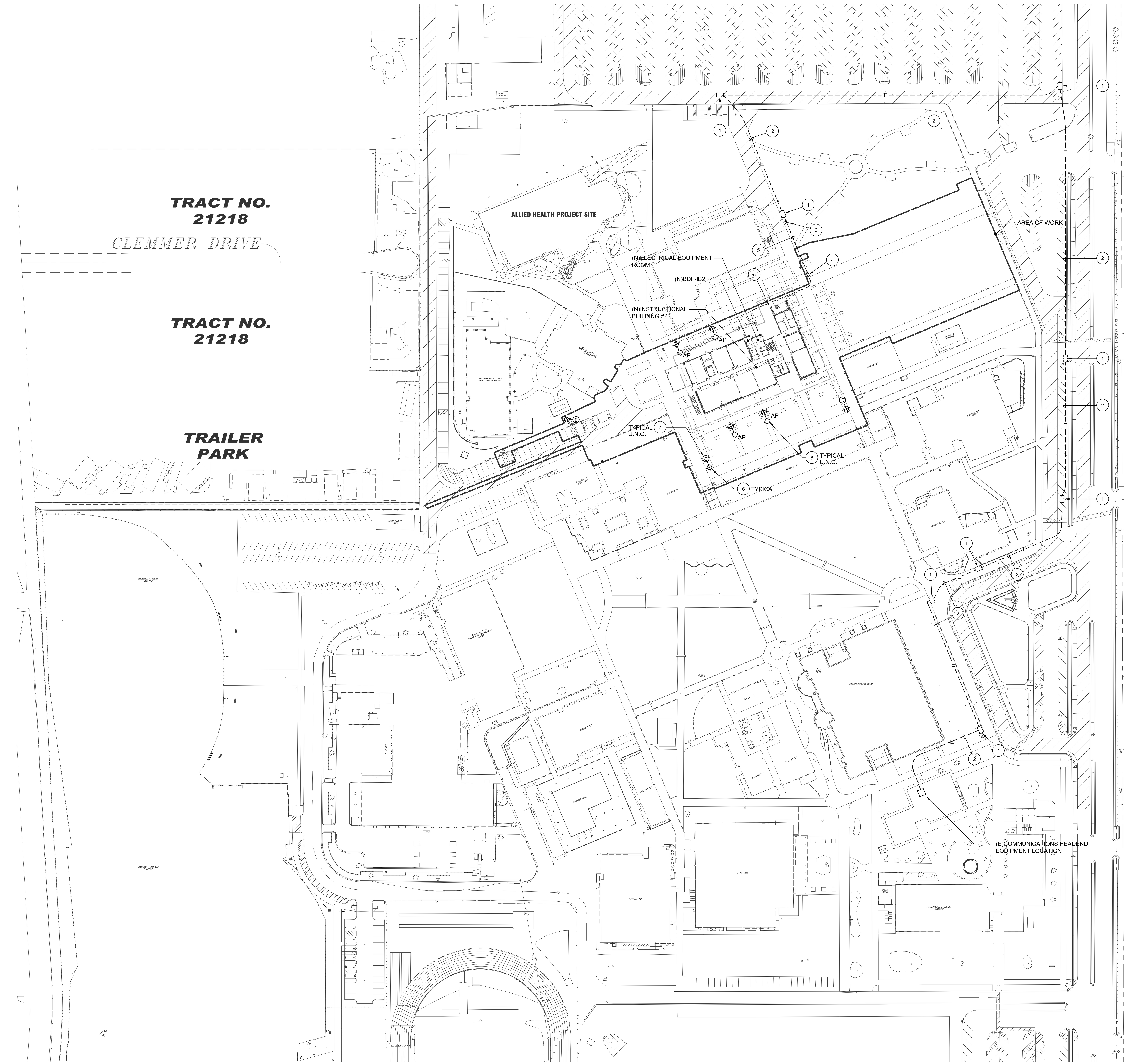

ENLARGED SITE TELECOM PLAN

SCALE: 1"=60'

NORTH

KEY NOTES

1. EXISTING COMMUNICATIONS MANHOLE TO REMAIN. PROTECT IN PLACE.
2. EXISTING UNDERGROUND OPTICAL FIBER COMMUNICATIONS CONDUITS WITH TWO(2) 4" SPARE CONDUITS. PROTECT IN PLACE.
3. INTERCEPT AT EXISTING COMMUNICATIONS MANHOLE AND EXTEND TWO(2) 4" CONDUITS TO NEW BUILDING'S BDF.
4. PROVIDE 3'-0" X 5'-0" X 3'-6" DEEP PRECAST CONCRETE PULLBOX WITH BOLT-DOWN TRAFFIC RATED, NON-SLIP COVER. ENGRAVE COVER TO READ: "COMMUNICATIONS."
5. PROVIDE TWO(2) 4" CONDUITS FOR COMMUNICATIONS. PROVIDE INNER DUCT AS SPECIFIED.
5. POLE MOUNTED WALKWAY LIGHTING FIXTURE, TYPICAL. SEE ENLARGED SITE LIGHTING PLAN ES-1.3.
5. PROVIDE OUTDOOR CLOSED CIRCUIT TELEVISION CAMERA, AS SPECIFIED, MOUNTED TO WALKWAY LUMINAIRE POLE AT +108" A.F.G. PROVIDE 3/4"C. CONCEALED IN POLE DOWN TO BELOW GRADE AND ON TO BELOW GRADE AND ON TO THE IB2 GROUND FLOOR TELECOM ROOM. PROVIDE ON E (1) DATA NETWORK CABLE AS SPECIFIED FROM THE CCTV CAMERAS, THROUGH THE CONDUIT SYSTEM AND TERMINATE IN THE TELECOM ROOM.
5. PROVIDE OUTDOOR WIRELESS ACCESS POINT, AS SPECIFIED, MOUNTED TO WALKWAY LUMINAIRE POLE AT +108" A.F.G. PROVIDE 3/4"C. CONCEALED IN POLE DOWN TO BELOW GRADE AND ON TO THE IB2 GROUND FLOOR TELECOM. PROVIDE ONE (1) DATA NETWORK CABLE AS SPECIFIED FROM THE WIRELESS ACCESS POINT, THROUGH THE CONDUIT SYSTEM AND TERMINATE IN THE TELECOM ROOM.

IDENTIFICATION STAMP
DIV. OF THE STATE ARCHITECT
APP. 03-119458 INC:
REVIEWED FOR
SS ☑ FLS ☑ ACS ☑
DATE:05/23/2019

DIVISION OF STATE ARCHITECT
355 South Grand Avenue, Suite 2100
Los Angeles, California. 90012
ph: (213) 897-3995 Fax: (213) 897-3159
agency

tBP
architecture planning interiors

tBP/Architecture
4611 Teller Avenue
Newport Beach, CA 92660
ph: 949.673.0300 fx: 949.732.3895
architect

FBA Engineering
Consulting Electrical Engineers
150 Paularino Avenue Suite A120
Costa Mesa, CA 92626
949.852.9995 • 949.852.1657 (fax)
fbaengr.com
FBA Job Number: 212.227
consultant

COMPTON COLLEGE
INSTRUCTIONAL BUILDING No. 2

COMPTON COMMUNITY COLLEGE DISTRICT
1111 E. ARTESIA BLVD. COMPTON, CA.
owner

tBP project number : 20998.00
file name:
drawn by: checked by:
date: 04/08/2019

Rev:	date:	description:

THIS DRAWING AND THE DESIGNS, DEPICTIONS, IDEAS AND OTHER INFORMATION CONTAINED HEREIN CONSTITUTE UNPUBLISHED WORK OF tBP/ARCHITECTURE AND SHALL REMAIN THE PROPERTY OF tBP/ARCHITECTURE IN PERPETUITY. NO PART THEREOF SHALL BE REPRODUCED, DISCLOSED, DISTRIBUTED, SOLD, PUBLISHED OR OTHERWISE USED IN ANY WAY WITHOUT THE ADVANCED EXPRESS WRITTEN CONSENT OF tBP/ARCHITECTURE.

drawing title:
ENLARGED SITE TELECOM PLAN

drawing no.:
ET-1.0
drawing of

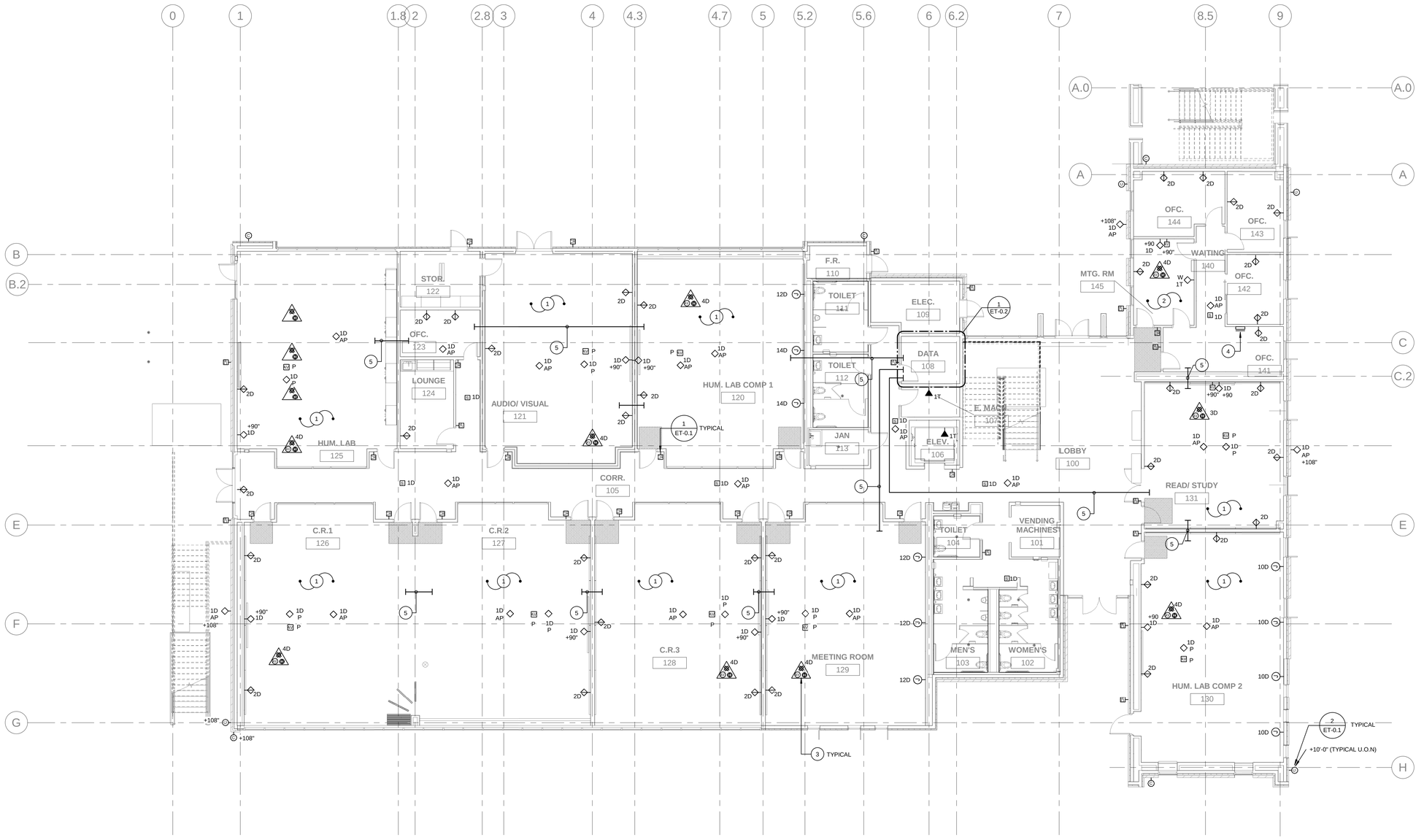

FIRST FLOOR TELECOM PLAN

SCALE 1/8" = 1'-0" 1

KEY NOTES

1. PROVIDE COMPLETE CLASSROOM AUDIO/VISUAL SYSTEM INCLUDING SHORT THROW PROJECTOR, PROJECTOR MOUNT, CONNECTOR PLATES, CONTROLLER, SPEAKERS, SOUND ENHANCEMENT AND ASSISTIVE LISTENING.
2. PROVIDE COMPLETE CONFERENCE ROOM AUDIO/VISUAL SYSTEM INCLUDING LCD DISPLAY, SHORT THROW PROJECTOR, PROJECTOR MOUNT, CONNECTOR PLATES, CONTROLLER, SPEAKERS, SOUND ENTERTAINMENT AND ASSISTIVE LISTENING.
3. INSTALL VOIP TELEPHONE, ONE (1) AT EACH LECTERN. PROGRAMMING SHALL BE PROVIDED BY COLLEGE.
4. PROVIDE AREA OF REFUGE TWO-WAY COMMUNICATION COMMAND CENTER RATH 2500 SERIES OR EQUAL. PROVIDE ALL CONDUIT AND WIRING FOR A COMPLETE INSTALLATION. REFER TO SPECIFICATION SECTION 273000 FOR ADDITIONAL REQUIREMENTS.
5. PROVIDE TWO (2) 3"C. THROUGH WALL ABOVE CEILING FOR COMPUTER/DATA/VOICE/PA SYSTEM CABLING. PROVIDE INSULATED THROAT BUSHINGS ON CONDUIT ENDS.

4/8/2019 4:15:47 PM

IDENTIFICATION STAMP
DIV. OF THE STATE ARCHITECT
APP. 03-119458 INC:
REVIEWED FOR
SS ☑ FLS ☑ ACS ☑
DATE:05/23/2019

DIVISION OF THE STATE ARCHITECT
355 South Grand Avenue, Suite 2100
Los Angeles, CA 90012
ph: (213) 897-3995 fx:(213) 897-3159

agency

tBP
architecture
planning
interiors

tBP/Architecture
4611 Teller Avenue
Newport Beach, CA 92660
ph: 949.673.0300 fx: 949.732.3895

architect

FBAEngineering
Consulting Electrical Engineers
150 Nations Avenue, Suite A120
Tustin, California 92782-3662
tel 657.259.9855 • 949.852.1697 (fax)
fba.com
FBA Job Number: 212.227

consultant

COMPTON COLLEGE
INSTRUCTIONAL BUILDING No.2
COMPTON COMMUNITY COLLEGE DISTRICT
1111 E. ARTESIA BLVD. COMPTON, CA.

owner

tBP project number: 20998.00
file name:
drawn by: checked by:
date: 04 / 08 / 2019

rev:	date:	description:

THIS DRAWING AND THE DESIGNS, IDEAS AND SPACES AND INFORMATION CONTAINED HEREIN CONSTITUTE UNPUBLISHED WORK OF tBP/ARCHITECTURE AND SHALL REMAIN PROPERTY OF tBP/ARCHITECTURE IN PERPETUITY. NO PART THEREOF SHALL BE REPRODUCED, DISCLOSED, DISTRIBUTED, SOLD, PUBLISHED OR OTHERWISE USED IN ANY WAY WITHOUT THE ADVANCED EXPRESS WRITTEN CONSENT OF tBP/ARCHITECTURE.

drawing title:
FIRST FLOOR TELECOM PLAN

drawing
ET-1.1
drawing of

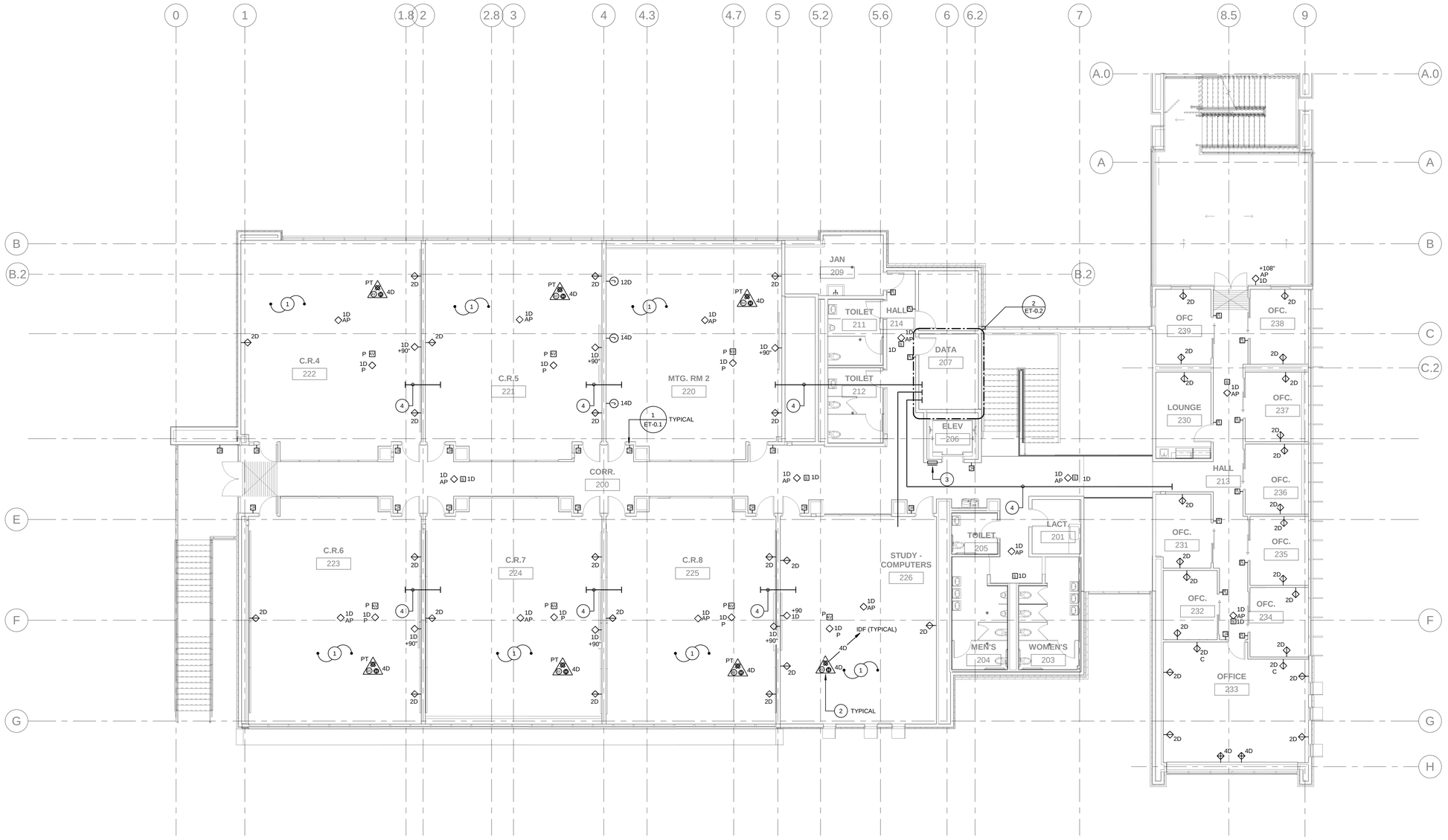

SECOND FLOOR TELECOM PLAN 1

SCALE 1/8" = 1'-0"

KEY NOTES

1. PROVIDE COMPLETE CLASSROOM AUDIO/VISUAL SYSTEM INCLUDING SHORT THROW PROJECTOR, PROJECTOR MOUNT, CONNECTOR PLATES, CONTROLLER, SPEAKERS, SOUND ENHANCEMENT AND ASSISTIVE LISTENING .
2. INSTALL VOIP TELEPHONE, ONE (1) AT EACH LECTERN, TELEPHONE AND PROGRAMING TO BE PROVIDED BY COLLEGE.
3. PROVIDE AREA OF REFUGE TWO-WAY COMMUNICATION SYSTEM COMPLETE WITH HANDS FREE ID CALL BOX AND SIGNAGE, RATH 2100 SERIES OR EQUAL. REFER TO SPECIFICATIONS SECTION 273000 FOR ADDITIONAL REQUIREMENTS.
4. PROVIDE TWO (2) 3"C. THROUGH WALL ABOVE CEILING FOR COMPUTER/DATA/VOICE/PA SYSTEMS CABLING. PROVIDE INSULATED THROAT BUSHINGS ON CONDUIT ENDS.

IDENTIFICATION STAMP
DIV. OF THE STATE ARCHITECT
APP. 03-119458 INC:
REVIEWED FOR
SS ☑ FLS ☑ ACS ☑
DATE:05/23/2019

DIVISION OF THE STATE ARCHITECT
355 South Grand Avenue, Suite 2100
Los Angeles, CA 90012
ph: (213) 897-3995 fx:(213) 897-3159

agency

tBP architecture planning interiors

tBP/Architecture
4611 Teller Avenue
Newport Beach, CA 92660
ph: 949.673.0300 fx: 949.732.3895

architect

FBA Engineering
Consulting Electrical Engineers
150 Paularino Avenue Suite A120
Costa Mesa, CA 92626
949.852.9995 • 949.852.1667 (fax)
fbaengr.com
FBA Job Number: 212.227

consultant

COMPTON COLLEGE
INSTRUCTIONAL BUILDING No.2

COMPTON COMMUNITY COLLEGE DISTRICT
1111 E. ARTESIA BLVD. COMPTON, CA.

owner

tBP project number: 20998.00
file name:
drawn by: checked by:
date: 04 / 08 / 2019

rev:	date:	description:

THIS DRAWING AND THE DESIGNS, DEPICTIONS, IDEAS AND OTHER INFORMATION CONTAINED HEREIN CONSTITUTE UNPUBLISHED WORK OF tBP/ARCHITECTURE AND SHALL REMAIN PROPERTY OF tBP/ARCHITECTURE IN PERPETUITY. NO PART THEREOF SHALL BE REPRODUCED, DISCLOSED, DISTRIBUTED, SOLD, PUBLISHED OR OTHERWISE USED IN ANY WAY WITHOUT THE ADVANCED EXPRESS WRITTEN CONSENT OF tBP/ARCHITECTURE.

drawing title:
SECOND FLOOR TELECOM PLAN

drawing
ET-2.1

drawing of

4/8/2019 4:15:54 PM

PROJECT INFORMATION :

PROJECT:

COMPTON COMMUNITY COLLEGE DISTRICT
INSTRUCTIONAL BUILDING No. 2
1111 W. ARTESIA BLVD
COMPTON, CA

ARCHITECT:
tBP ARCHITECTURE
4611 TELLER AVE.
NEWPORT BEACH, CA 92660
Phone: 949.673.0300
Fax: 949.732.3895

GENERAL CONTRACTOR :
Phone:
Fax:

GLAZING CONTRACTOR:
Phone:
Fax:

FRAMING:
Curtainwall : OPG1500 series, $2\frac{1}{4}$" x $5\frac{1}{2}$" for 1" Offset Glazed
OPG1900 series, $2\frac{1}{4}$" x 7" for 1" Offset Glazed
Storefront : TC470 series, $2\frac{1}{4}$" x 7" for 1" Offset Glazed
AR600 series, 2" x 6" for $\frac{1}{4}$" Center Glazed
Doors : Wide Stile Standard non thermal WS512 series
Vertical Fin : BSD009 series

FRAME FINISH: Painted 70% Kynar

DESIGN CRITERIA:

BUILDING CODE : CBC 2016
MATERIAL:
- ALUMINUM FRAMING MEMBERS HAVE BEEN DESIGNED PER THE ALUMINUM DESIGN MANUAL. ALUMINUM FRAMING MATERIAL TO BE 6063-T6 TEMPER ALLOY UNLESS NOTED OTHERWISE. THE MAIN FRAMING MEMBERS HAVE EITHER BEEN DESIGNED AS CHANNEL MEMBERS OR TUBULAR MEMBERS. THESE MEMBERS ARE TREATED AS BEAMS AND ARE SUBJECT TO COMPRESSION IN THEIR GROSS SECTION AND EXTREME FIBERS. THE ALUMINUM SPECIFICATION SECTIONS THAT APPLY ARE 3.4.11 FOR CHANNEL SHAPES AND 3.4.14 FOR TUBULAR SHAPES. SPECIFICATION SECTIONS 3.4.15, 3.4.16, 3.4.16.2, AND 3.4.18 APPLY FOR BOTH CHANNEL AND TUBULAR SHAPES.
- ALL FASTENERS SHALL BE ZINC PLATED STEEL UNLESS NOTED OTHERWISE.
- SEALANT SEE SEPARATE SUBMITTAL
- GLASS AND GLAZING SEE SEPARATE SUBMITTAL
- HARDWARE SEE SEPARATE SUBMITTAL

DEAD LOAD:
GLASS 6.5 PSF UNLESS OTHERWISE SPECIFIED, ALUMINUM 2.0 PSF UNLESS OTHERWISE SPECIFIED
TOTAL 8.5 PSF

WIND LOAD
BASIC WIND SPEED = 115 MPH (3 SEC GUST)
EXPOSURE = C
OCCUPANCY CATEGORY = III
INTERNAL PRESSURE COEF. = +/- 0.18
BUILDING HEIGHT = ± 30'-0"
BUILDING WIDTH = ± 197'-11"
BUILDING LENGTH = ± 124'-5 1/2"

SEISMIC LOAD
DESIGN CATEGORY = D
SITE CLASS = D
IMPORTANCE FACTOR = 1.25
OCCUPANCY CATEGORY = III
Ss = 1.674 Sds = 1.116
S1 = 0.611 Sd1 = 0.611
Rho = 1.3 R = 8
Cd = 5 Ω = 2.5

GLAZING CONTRACTOR, GENERAL CONTRACTOR, & ARCHITECT NOTES:

1. THE FOLLOWING SHOP DRAWING ARE FOR THE SPECIFIC ALUMINUM WINDOWS, STOREFRONTS, CURTAIN WALLS, DOORS MATERIAL ONLY. UNLESS SPECIFICALLY NOTED:
   A. SURROUNDING STRUCTURES / SUBSTRATE DETAILS ARE FOR REFERENCE ONLY AND MUST BE VERIFIED BY ARCHITECT, CONTRACTORS AND SUB-TRADES AS REQUIRED
   B. ALL DIMENSIONS, QUANTITIES AND CONDITIONS SHOWN MUST BE VERIFIED IN FIELD BEFORE FABRICATION AND INSTALLATION
   C. THESE SHOP DRAWINGS WHEN APPROVED WILL SUPERSEDE ALL OTHER DOCUMENTS WITH WHICH THE JOB WILL BE MANUFACTURED. ANY SUBSEQUENT CHANGES ARE SUBJECT TO THE APPROVAL OF ARCADIA INC.
   D. TOLERANCE OF ROUGH OPENING SHALL BE A MINIMUM +/- 3/16"
2. ARCADIA INC IS NOT RESPONSIBLE FOR WORK AND/OR ERRORS INCURRED BY OTHER TRADES THROUGH THE USE OF THIS SHOP DRAWING
3. ALL APPROVALS OF THESE SHOP DRAWING BY CONSULTANT, PUBLIC AGENCY ARCHITECT ETC. MUST BE OBTAINED BEFORE DIES ARE CUT, MATERIAL FABRICATED OR SHIPPED. ARCADIA INC. IS NOT RESPONSIBLE FOR MATERIAL FABRICATED, SHIPPED OR ERECTED PRIOR TO ALL APPROVALS.
4. THE CAPACITY OF THE BUILDING STRUCTURE TO SUPPORT THE DEAD AND WIND LOADING HAS NOT BEEN EVALUATED. A COPY OF THESE SHOP DRAWING AND CALCULATIONS SHOULD BE SUBMITTED TO THE PROJECT STRUCTURAL ENGINEER SO THAT THE ADEQUACY OF THE BUILDING STRUCTURE CAN BE EVALUATED.
5. ALL GASKET JOINTS, BUTT JOINTS, HORIZONTAL AND VERTICAL JOINT, LAP JOINTS AND WEEP HOLES SHOULD BE SEALED AND INSTALLED WATERTIGHT PER THE INSTALLATION INSTRUCTION AND/OR TEST REPORT AND FOLLOWING SEALANT MANUFACTURER RECOMMENDATIONS AS TO SIZE, METHOD OF APPLICATION AND COMPATIBILITY WITH ADJOINING MATERIAL.
6. IF CONNECTION CONFIGURATION OR MATERIALS DIFFER FROM THOSE USED IN THIS SET OF SHOP DRAWING IT SHALL BE BROUGHT TO THE ATTENTION OF ARCADIA INC. PRIOR TO FABRICATION OR INSTALLATION.
7. ALL SHEAR BLOCKS SHALL BE ALUMINUM WITH A DRILLED HOLE OF MAX. DIAMETER EQUAL TO BOLT DIAMETER PLUS 1/32".
8. ALL BOLTS, LAG SCREWS, AND CONCRETE ANCHORS SHALL BE INSTALLED WITH AMERICAN STANDARD PLAIN WASHERS UNLESS NOTED OTHERWISE. ALL BOLTS SHALL BE ASTM A307 UNLESS NOTED OTHERWISE.
9. ALL POST-INSTALLED CONCRETE ANCHORS ARE SUBJECT TO SPECIAL INSPECTION PER THE ESR AND LOCAL ADOPTED BUILDING CODES.
10. INTERNAL STEEL STIFFENERS WHERE SPECIFIED SHALL BE FABRICATED USING ASTM A-36 STEEL FOR STRUCTURAL SHAPES AND ASTM A-569 FOR COLD FORMED SECTIONS. DIMENSIONS SHOWN IN THESE SHOP DRAWING AND CALCULATIONS ARE APPROXIMATE; ACTUAL FABRICATED SIZE SHALL PROVIDE FOR A TIGHT FIT WITH A MAXIMUM OF 1/8" CLEARANCE.
11. ALL WELDING OF ALUMINUM SHALL BE IN ACCORDANCE WITH BUILDING CODE. WELDING OF ALUMINUM TO OCCUR ONLY AT LOCATIONS SPECIFICALLY SHOWN ON SHOP DRAWING.
12. ALL ALUMINUM IN CONTACT WITH MASONRY, STUCCO, STEEL OR OTHER DISSIMILAR MATERIALS SHALL BE SEPARATED WITH VINYL TAPE OR POLYSTYRENE SHIMS. INTERNAL STEEL REINFORCING SHALL BE SHOP COATED WITH ALKYD TYPE ZINC CHROMATE PRIMER COMPLYING WITH FS TT-P-645.
13. ALL GLASS AND GLAZING SHALL MEET THE REQUIREMENTS FOR THE CURRENT BUILDING CODE. SAFETY GLAZING SHALL BE USED IN ALL AREAS WHERE REQUIRED.
14. GLASS SETTING BLOCKS SHALL BE INSTALLED AT GLASS LITE 1/4 POINTS EXCEPT AS SPECIFICALLY NOTED OTHERWISE ON THE WINDOW WALL ELEVATIONS.
15. ARCADIA INC. IS NOT RESPONSIBLE FOR THE TYPE, SIZE, OR LOCATION OF ANY LOAD BEARING STRUCTURAL MEMBERS OF THE BUILDING. THE DESIGN OF THE WINDOW WALL IS BASED ON THE ASSUMPTION THAT THE BUILDING MEMBERS ARE CAPABLE OF ADEQUATELY SUPPORTING ALL WIND AND DEAD LOADS IMPOSED ON THEM BY THE SYSTEM. THIS SYSTEM, AS DETAILED, SHALL BE DESIGNED TO ACCOMMODATE A BUILDING DEFLECTION OF + OR - 1/4" VERTICALLY. THE STRUCTURAL ENGINEER OF RECORD FOR THE BUILDING SHALL VERIFY THAT ALL SURROUNDING STRUCTURES TO WHICH WINDOW WALL FRAMING IS TO BE ANCHORED ARE STRUCTURALLY SOUND AND CAPABLE OF SUPPORTING THE WEIGHTS AND REACTIONS OF THESE SYSTEMS UNDER MAXIMUM DESIGN LOADS.
16. STRUCTURAL ATTACHMENT BETWEEN ALUMINUM FRAMING AND STEEL STUD FRAMING SHALL BE ADEQUATE TO ACCEPT ALL LOADS IMPOSED BY THE WINDOW OR CURTAIN WALL FRAMING.(STEEL STUD FRAMING DESIGN AND SUPPLY BY OTHER)
17. THE WIND LOAD REACTIONS ACT PERPENDICULAR TO THE ELEVATION AT EACH MULLION LOCATION THE DEAD LOAD REACTIONS ACT IN THE DOWNWARD DIRECTION AT EACH MULLION LOCATION. THE WIND LOAD AND DEAD LOAD REACTIONS SHOWN ARE THE WORST CASE REACTIONS PER ELEVATION.
18. USE 100% ELONGATION SILICONE SEALANT AT ALL LOCATIONS.
19. ALL SCREWS TO BE 18-8 STAINLESS STEEL OR SAE J429 GRADE 2 MINIMUM.

SHEET INDEX

NO.	SHEET NO.	SHEET TITLE	REVISION
1	CW0.01	COVER SHEET	
2	CW0.02	GENERAL NOTES & DOOR SCED	
3	CW0.04	SECTION PROPERTIES	
4	CW0.05	SECTION PROPERTIES	
5	CW1.01	FIRST FLOOR PLAN	
6	CW1.02	SECOND FLOOR PLAN	
7	CW2.01	ELEVATION AR600	
8	CW3.01	ELEVATION OPG-1500	
9	CW3.02	ELEVATION OPG-1500	
10	CW3.03	ELEVATION OPG-1500	
11	CW3.04	ELEVATION OPG-1900	
12	CW3.05	ELEVATION OPG-1900	
13	CW3.06	ELEVATION TC-470	
14	CW4.01	HORIZONTAL DETAILS (OPG-1900)	
15	CW4.01A	HORIZONTAL DETAILS (OPG-1900)	
16	CW4.02	HORIZONTAL DETAILS (OPG-1900)	
17	CW4.03	HORIZONTAL DETAILS (OPG-1900)	
18	CW5.01	VERTICAL DETAILS (OPG-1900)	
19	CW5.02	VERTICAL DETAILS (OPG-1900)	
20	CW5.03	VERTICAL DETAILS (OPG-1900)	
21	CW6.01	HORIZONTAL DETAILS (OPG-1500)	
22	CW6.02	HORIZONTAL DETAILS (OPG-1500)	
23	CW7.01	VERTICAL DETAILS (OPG-1500)	
24	CW7.02	VERTICAL DETAILS (OPG-1500)	
25	CW8.01	HORIZONTAL DETAILS (TC470)	
26	CW8.02	HORIZONTAL DETAILS (TC470)	
27	CW8.03	HORIZONTAL DETAILS (TC470)	
28	CW8.04	HORIZONTAL DETAILS (TC470)	
29	CW8.05	HORIZONTAL DETAILS (TC470)	
30	CW8.06	HORIZONTAL DETAILS (TC470)	
31	CW9.01	VERTICAL DETAILS (TC-470)	
32	CW9.02	VERTICAL DETAILS (TC-470)	
33	CW9.03	VERTICAL DETAILS (TC-470)	
34	CW10.01	HORIZONTAL DETAILS (AR600)	
35	CW11.01	VERTICAL DETAILS (AR600)	

SHEET INDEX

NO.	SHEET NO.	SHEET TITLE	REVISION

ARCADIA, INC.® PRODUCT USE & WARRANTY

Product Use
Arcadia, Inc., hereby disclaims all liability for the installation of project or design, any parts, gaskets, glazing aerials, components or sealant of other manufacturers used with Arcadia, Inc.,products , or lack of performance of Arcadia, Inc., products attributable to such items. Buyer agrees that under no circumstances shall Arcadia, Inc. be liable for installation defects as Arcadia, Inc. has not and will not be involved in the product selection or installation process. Buyer acknowledges that windows and doors are designed and manufactured to specific performance levels and are rated and classified for particular uses. Different product applications require different levels of product performance. Windows and doors are rated by independent certification agencies to insure they meet their specifications. Selecting the appropriate Arcadia, Inc. products and the installation and application of these products is not the responsibility of Arcadia, Inc. but of Buyer. Buyer represents and agrees that Buyer is solely responsible for the selection and application of proper systems and sizes and to ensure that when installed Arcadia, Inc.'s products will not allow water to pass beyond, around or through Arcadia, Inc.'s products. Unless Buyer has requested in writing and paid a separate and additional fee to Arcadia, Inc. for assembly and installation instructions and unless the same is reflected in this documents. Buyer agrees that any details shown are for purposes of illustrations purposes only and are not intended to show how the product should actually be installed and applied. This warranty also does not cover, and Arcadia, Inc., hereby disclaims all liability for any product which has accident, fire, war, flood, earthquakes, acts of God, or to which parts not supplied by Arcadia, Inc., have been added, or to defects caused by depreciation or normal wear. All decisions regarding the existence of defects in material and workmanship and the occurrence of any of the matters described in the preceding paragraphs or affecting this Warranty shall be made by Arcadia, Inc., and shall be final and binding upon the parties.

Warranties
Arcadia, Inc. warrants that goods sold here under are merchantable unless manufactured in conformance with Buyer's specifications, and that Arcadia, Inc. conveys good title thereto. ARCADIA, INC. MAKES NO WARRANTIES OR REPRESENTATIONS , EPRESS OR IMPLIED, BEYOND THE DESCRIPTION ON THE FACE OF THIS CONTRACT AND PURCHASER UNDERSTANDS THAT ARCADIA, INC. HEREBY DISCLAIMS ALL IMPLIED WARRANTIES OF MERCHANTABILITY AND FITNESS. FOR EXAMPLE, ARCADIA, INC. DOES NOT WARRANT THAT THE GOODS ARE FIT FOR BUYER'S PARTICULAR USE OR PURPOSE, AND EXPRESSLY DISCLAIMS ALL PRIOR, CONTEMPORANEOUS OR SUBSEQUENT ORAL REPRESENTATIONS OR WARRANTIES OF ANY KIND. IN THE EVENT GOODS ARE NOT CONFORMING, BUYER'S EXCLUSIVE REMEDY SHALL BE RETURN OF THE GOODS AND REFUND OF THE PURCHASE PRICE, OR AT ARCADIA, INC.'S OPTION, REPLACEMENT OF THE GOODS BY ARCADIA, INC., BUT IN NO EVENT SHALL ARCADIA, INC. BE LIABLE TO BUYER FOR ANY MERCHANDISE OR PART BEYOND ITS INVOICE VALUE (LESS SCRAP VALUE), NOR FOR ANY DIRECT , CONSEQUENTIAL, SPECIAL OR INDIRECT DAMAGES. Arcadia, Inc. shall not have any liability to the customer for lost profits or other consequential, special, indirect or incidental damages, based upon a claim of any type or nature (including, but not limited to, contract, tort (including negligence, warranty or strict liability)), even if advised of possibility of such damages. Arcadia, Inc. specifically does not warrant the accuracy of any advice or recommendations given to Buyer in connection with the sale of goods hereunder.

ALUMINUM STOREFRONT DOORS, AND SUNSHADE SHOP DRAWINGS

Submittal No. 1 Date: 10/05/2018

THESE DRAWINGS WERE PRODUCED USING THE FOLLOWING RESOURCES:
ARCHITECTURE DRAWINGS DATED 09-12-2018

AAE 2018-290

COMPTON COMMUNITY
INSTRUCTIONAL BUILDING No. 2

1111 W. ARTESIA BLVD
COMPTON, CA

REVIEW NOTES

FIELD TESTING

REFER TO AAMA 502-12 VOLUNTARY SPECIFICATION FOR FIELD TESTING OF NEWLY INSTALLED FENESTRATION PRODUCTS FOR COMPLETE TESTING METHODS AND GUIDELINES

FIELD TESTING OF INSTALLED SPECIMENS, (IF REQUIRED), SHALL BE TESTED AT A $\frac{1}{3}$ REDUCTION OF THE TEST PRESSURE LISTED IN PROJECT SPECIFICATIONS. (PER AMMA 502-12)

REF: SECTION 5.3.2 TEST PROCEDURES; NOTE 6.
Unless otherwise specified, **water penetration resistance tests shall be conducted at a static test pressure equal to $\frac{2}{3}$ of the tested and rated laboratory performance test pressure** as indicated by the applicable product designation in AAMA/ WDMA/ CSA 101/ I.S. 2/ A440. For example, a product tested or rated as H-CW40 shall be field tested at a pressure differential of 0.0667 x 360Pa (8 psf) = 240 Pa (5.33 psf)

NARRATIVE NOTE 6:
The default pressures used for water penetration resistance tests conducted in the field are not the same as the laboratory test pressure, to allow for field conditions and test methods that vary from the laboratory test conditions and test methods. These conditions are primarily related to the ambient environmental conditions and the installation. The certified product performance is based on laboratory testing performed under controlled laboratory conditions. The temperature, wind, and barometric pressure conditions during a field test will typically vary from the standard laboratory conditions.

The field installation conditions also influence the product performance. Products tested in the laboratory are perfectly plumb, level and square in a precise opening. Field test specimens, although installed within acceptable industry tolerances, are rarely perfectly plumb, level and square in a precision opening. Shipping, handling, acts of subsequent trades, aging and other environmental conditions all may have and adverse effect upon the performance of the installed specimen. ***A $\frac{1}{3}$ reduction of the test pressure for field testing is specified as a reasonable amount adjustment for the difference between a laboratory test environment and a field test environment.***

IDENTIFICATION STAMP
DIV. OF THE STATE ARCHITECT
APP. 03-119458 INC:
REVIEWED FOR
SS ☑ FLS ☑ ACS ☑
DATE:05/23/2019

DIVISION OF STATE ARCHITECT
355 South Grand Avenue, Suite 2100
Los Angeles, California. 90012
ph: (213) 897-3995 Fax: (213) 897-3159

agency

tBP architecture planning interiors

tBP/Architecture
4611 Teller Avenue
Newport Beach, CA 92660
ph: 949.673.0300 fx: 949.732.3895

architect

REGISTERED PROFESSIONAL ENGINEER
CRAIG M. HOGNON
No. 84674
CIVIL
STATE OF CALIFORNIA

04/12/19

consultant

COMPTON COLLEGE
INSTRUCTIONAL BUILDING No. 2

COMPTON COMMUNITY COLLEGE DISTRICT
1111 E. ARTESIA BLVD. COMPTON, CA.

owner

tBP project number : 20998.00
file name:
drawn by: checked by:
date: 10/20/18

Rev:	date:	description:

THIS DRAWING AND THE DESIGNS, DEPICTIONS, IDEAS AND OTHER INFORMATION CONTAINED HEREIN CONSTITUTE UNPUBLISHED WORK OF tBP/ARCHITECTURE AND SHALL REMAIN THE PROPERTY OF tBP/ARCHITECTURE IN PERPETUITY. NO PART THEREOF SHALL BE REPRODUCED, DISCLOSED, DISTRIBUTED, SOLD, PUBLISHED OR OTHERWISE USED IN ANY WAY WITHOUT THE ADVANCED EXPRESS WRITTEN CONSENT OF tBP/ARCHITECTURE.

drawing title:
COVER SHEET

drawing no.:
CW0.01

drawing of

GLASS SCHEDULE / MATERIAL LEGEND

SYMBOL	DESCRIPTION G= Glass Type, X = Equivalent ARCH. ref. number, s = Spandrel, T = Tempered
GL-1	1" CLEAR INSULATED GLAZING • 1/4" THICK OUTBOARD • 1/2" AIR SPACE • 1/4" THICK INBOARD
GL-2	1" INSULATED SPANDREL GLAZING • 1/4" THICK OUTBOARD • 1/2" AIR SPACE • 1/4" THICK INBOARD

MATERIALS:

01 - ALUMINUM SHALL BE 6063-T6 ALLOY (TYPICAL - UNLESS NOTED OTHERWISE)
02 - ALL FASTENERS SHALL BE ZINC PLATED STEEL (UNLESS NOTED OTHERWISE)
STAINLESS STEEL FASTENERS WHERE EXPOSED TO WEATHER
03 - PERIMETER FASTENERS PROVIDED BY CUSTOMER
04 - ALL SETTING BOCKS WILL BE SILICONE
05 - ALL GASKETS WILL BE EPDM (UNLESS NOTED OTHERWISE)
GASKETS IN CONTACT WITH SEALANT WILL BE SILICONE

SEALANT & SPACER SCHEDULE

TYPE	SPEC REF.	SPEC SECTION	COLOR	DESCRIPTION
STRUCTURAL SEALANT	-	-	BLACK	DOW CORNING 795 (LARR # 24637) WITH 3/8" MIN BITE.
WEATHER SEALANT	-	-	BLACK	DOW CORNING 795 (LARR # 24637)
SPACER	-	-	BLACK	

REPETITIVE NOTES:

NO	DESCRIPTION
01	SILICONE SEALANT WITH OPEN-CELL BACKER ROD (NOT BY ARCADIA)
01a	WEATHER SEAL SEALANT WITH BACKER ROD (NOT BY ARCADIA)
02	3/4" X 5/16" WEEP HOLE APPROX. 6" FROM EACH END
03	3/4" X 5/16" WEEP HOLE APPROX. 3"" FROM EACH END WITH WEEP BAFFLE - 2 PER LITE
07	SEAL AT FASTENER LOCATIONS
08	1/8" thk END DAM BEDDED IN SEALANT AND SEALED THOROUGHLY
10	5/16" x 5/8" WEEP SLOT @ 4" FROM END SIDE OF MULLION WITH WEEP BAFFLE - 2 PER LITE
13	CLEAR HOLE FOR FASTENER

X.X.X FASTENERS:

TAG FT.SL.X	DESCRIPTION FT = Fastener Type, SL = Size and Length, X = P for Zinc Plated or S for Stainless Steel		
HH.1/4".ST	**1/4-20 DRILL-FLEX,STALGARD FINSH**		**ESR-3332**
HH.3/8".ST	**⅜" Ø HIL TI KWIK HUS-EZ,STALGARD FINSH**	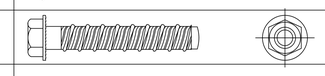	**ESR-3027**
#12 X 1 1/2" P.H.	#12 x 1.5" LONG PAN HEAD SHEET METAL SCREW		
#12 X 1/2" F.H.	#12 x 0.5" LONG FLAT HEAD SHEET METAL SCREW		
#12 X 1/2" P.H.	#12 x 0.5" LONG PAN HEAD SHEET METAL SCREW		
#12 X 7/8" HHSD	#12 x 7/8" LONG HEX HEAD SHEET METAL SCREW	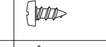	
#12 X 1" F.H.	#12 x 1" LONG FLAT HEAD SHEET METAL SCREW		
#12 X 1 1/2" F.H.	#12 x 1.5" LONG FLAT HEAD SHEET METAL SCREW		

GASKET TABLE:

GASKET No.	GASKET	Shop Drawing Reference	SYMBOL	DESCRIPTION
OPG 1985 Gasket			G01	Glazing gasket for OPG-1500 at Front and Back
OPG 1986IP ISOLATOR			G02	Thermal/Pressure Bar Isolator Gasket for OPG-1500
LCWG7S			G03	Spacer Gasket for SSG Horizontals
AWB-C4375			G04	Anti Walk Block
VTL-TG Gasket			G05	GASKET TC470
E260 Front Gasket			G06	Door Front Gasket
E150 Back Gasket			G07	Door Back Gasket
5051			G08	Bulb Gasket

SETTING BLOCKS

PART No.	BLOCK	Shop Drawing Reference	SYMBOL	DESCRIPTION
			SB01	Setting Block [1" x 7/16" x 4"] SB_1.0000X0.43750X4
			SB02	Setting Block [1" x 3/16" x 4"] SB_1.0000X0.1875X4
			SB03	Setting Block [1" x 1/2" x 4"] SB_1.0000X0.50X4
			SB04	Setting Block [1" x 3/8" x 4"] SB_1.0000X0.375X4
			SB05	Setting Block [5/8" x 3/8" x 4"] SB_0.6250X0.3750X4
			SB06	Setting Block [1" x 1/4" x 4"] SB_1.0000X0.250X4
			SB07	Setting Block [1/2" x 1/4" x 4"] SB_0.5000X0.250X4

LEGEND

REFERENCE	DESCRIPTION	REFERENCE	DESCRIPTION	REFERENCE	DESCRIPTION
X / XX	ELEVATION # SHEET #			WIND LOAD	
T / B	DETAIL # SHEET #			DEAD LOAD	
DETNO / SHTNO	DETAIL # SHEET #			▶	= ANCHOR LOCATION INDICATOR(@ D.L)
				▷	= ANCHOR LOCATION INDICATOR(@ W.L)
				◆	= SPLICE LOCATION

ABBREVIATIONS

REFERENCE	DESCRIPTION	REFERENCE	DESCRIPTION
B.O.M.	BOTTOM OF MULLION	R. O.	ROUGH OPENING DIMENSION
℄	CENTER LINE	T .O .C.	TOP OF CONCRETE
D .L .O.	DAYLGHT OPENING DIMENSION	T .O .H.	TOP OF HORIZONTAL
D. O.	DOOR OPENING DIMENSION	T.O.M.	TOP OF MULLION
D. P.	DIMENSION POINT REFERENCE	TYP.	TYPICAL
N.F. D.	NET FRAME DIMENSION	V.I.F.	VERIFY IN FIELD
OPP.	OPPOSITE HAND	W.O.	WINDOW OPENING
N.B.A.	NOT BY ARCADIA	L.O.C	LINE OF CENTER

IDENTIFICATION STAMP
DIV. OF THE STATE ARCHITECT
APP. 03-119458 INC:
REVIEWED FOR
SS ☑ FLS ☑ ACS ☑
DATE:05/23/2019

DIVISION OF STATE ARCHITECT
355 South Grand Avenue, Suite 2100
Los Angeles, California. 90012
ph: (213) 897-3995 Fax: (213) 897-3159
agency

tBP architecture planning interiors
tBP/Architecture
4611 Teller Avenue
Newport Beach, CA 92660
ph: 949.673.0300 fx: 949.732.3895
architect

REGISTERED PROFESSIONAL ENGINEER CRAIG M. HUNTER No. 84674 CIVIL STATE OF CALIFORNIA
04/12/19
consultant

COMPTON COLLEGE
INSTRUCTIONAL BUILDING No. 2
COMPTON COMMUNITY COLLEGE DISTRICT
1111 E. ARTESIA BLVD. COMPTON, CA.
owner

tBP project number : 20998.00
file name:
drawn by: checked by:
date: 10/20/18

Rev:	date:	description:

THIS DRAWING AND THE DESIGNS, DEPICTIONS, IDEAS AND OTHER INFORMATION CONTAINED HEREIN CONSTITUTE UNPUBLISHED WORK OF tBP/ARCHITECTURE AND SHALL REMAIN THE PROPERTY OF tBP/ARCHITECTURE IN PERPETUITY. NO PART THEREOF SHALL BE REPRODUCED, DISCLOSED, DISTRIBUTED, SOLD, PUBLISHED OR OTHERWISE USED IN ANY WAY WITHOUT THE ADVANCED EXPRESS WRITTEN CONSENT OF tBP/ARCHITECTURE.

drawing title:
GENERAL NOTES
drawing no.:
CW0.02
drawing of

OPG1978

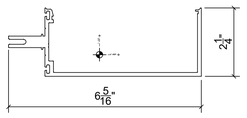

Area: 1.5637
Perimeter: 24.0507
Bounding box: X: -2.9662 -- 3.3198
Y: -0.7046 -- 1.5244
Centroid: X: 0.0000
Y: 0.0000
Moments of inertia: X: 0.6634
Y: 7.3019
Product of inertia: XY: -0.5054
Radii of gyration: X: 0.6513
Y: 2.1609
Principal moments and X-Y directions about centroid:
I: 0.6252 along [0.9971 -0.0755]
J: 7.3402 along [0.0755 0.9971]

OPG1999

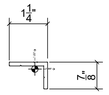

Area: 0.2486
Perimeter: 4.2738
Bounding box: X: -0.8363 -- 0.4137
Y: -0.6486 -- 0.2264
Centroid: X: 0.0000
Y: 0.0000
Moments of inertia: X: 0.0157
Y: 0.0388
Product of inertia: XY: -0.0143
Radii of gyration: X: 0.2514
Y: 0.3950
Principal moments and X-Y directions about centroid:
I: 0.0089 along [0.9019 -0.4319]
J: 0.0457 along [0.4319 0.9019]

OPG1901

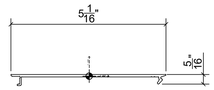

Area: 0.4303
Perimeter: 11.4205
Bounding box: X: -2.5541 -- 2.5039
Y: -0.3075 -- 0.0545
Centroid: X: 0.0000
Y: 0.0000
Moments of inertia: X: 0.0015
Y: 0.9890
Product of inertia: XY: 0.0011
Radii of gyration: X: 0.0592
Y: 1.5160
Principal moments and X-Y directions about centroid:
I: 0.0015 along [1.0000 0.0012]
J: 0.9890 along [-0.0012 1.0000]

OPG1551

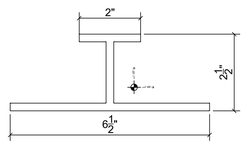

Area: 2.6249
Perimeter: 21.4485
Bounding box: X: -3.2500 -- 3.2500
Y: -0.7679 -- 1.7321
Centroid: X: 0.0000
Y: 0.0000
Moments of inertia: X: 2.2568
Y: 5.8896
Product of inertia: XY: 0.0000
Radii of gyration: X: 0.9272
Y: 1.4979
Principal moments and X-Y directions about centroid:
I: 2.2568 along [1.0000 0.0000]
J: 5.8896 along [0.0000 1.0000]

OPG1552

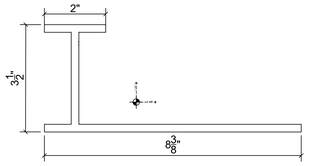

Area: 3.3433
Perimeter: 27.2213
Bounding box: X: -2.9961 -- 5.3789
Y: -0.9752 -- 2.5248
Centroid: X: 0.0000
Y: 0.0000
Moments of inertia: X: 5.4178
Y: 20.3583
Product of inertia: XY: 5.6744
Radii of gyration: X: 1.2730
Y: 2.4676
Principal moments and X-Y directions about centroid:
I: 3.5070 along [0.9477 -0.3191]
J: 22.2690 along [0.3191 0.9477]

OPG1979

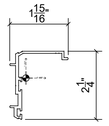

Area: 0.4261
Perimeter: 10.1895
Bounding box: X: -0.5300 -- 1.3780
Y: -1.3489 -- 0.8752
Centroid: X: 0.0000
Y: 0.0000
Moments of inertia: X: 0.2321
Y: 0.1049
Product of inertia: XY: 0.0883
Radii of gyration: X: 0.7381
Y: 0.4963
Principal moments and X-Y directions about centroid:
I: 0.0597 along [0.4559 0.8900]
J: 0.2773 along [-0.8900 0.4559]

OPG1912

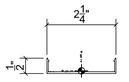

Area: 0.1735
Perimeter: 6.4400
Bounding box: X: -0.0858 -- 0.4142
Y: -1.1233 -- 1.1267
Centroid: X: 0.0000
Y: 0.0000
Moments of inertia: X: 0.1039
Y: 0.0025
Product of inertia: XY: 0.0000
Radii of gyration: X: 0.7737
Y: 0.1196
Principal moments and X-Y directions about centroid:
I: 0.0025 along [0.0001 1.0000]
J: 0.1039 along [-1.0000 0.0001]

OPG1900

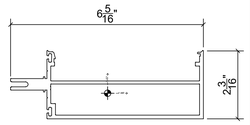

Area: 2.0426
Perimeter: 33.7381
Bounding box: X: -3.1648 -- 3.1212
Y: -0.8344 -- 1.3946
Centroid: X: 0.0000
Y: 0.0000
Moments of inertia: X: 0.7531
Y: 8.5672
Product of inertia: XY: -0.3104
Radii of gyration: X: 0.6072
Y: 2.0480
Principal moments and X-Y directions about centroid:
I: 0.7408 along [0.9992 -0.0396]
J: 8.5795 along [0.0396 0.9992]

OPG1902

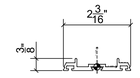

Area: 0.3363
Perimeter: 7.2055
Bounding box: X: -1.0999 -- 1.0981
Y: -0.1209 -- 0.2741
Centroid: X: 0.0000
Y: 0.0000
Moments of inertia: X: 0.0023
Y: 0.1390
Product of inertia: XY: 0.0000
Radii of gyration: X: 0.0829
Y: 0.6430
Principal moments and X-Y directions about centroid:
I: 0.0023 along [1.0000 0.0003]
J: 0.1390 along [-0.0003 1.0000]

DWCADP

Area: 0.0749
Perimeter: 2.4710
Bounding box: X: -0.1257 -- 0.1485
Y: -0.4508 -- 0.4872
Centroid: X: 0.0000
Y: 0.0000
Moments of inertia: X: 0.0050
Y: 0.0005
Product of inertia: XY: -0.0011
Radii of gyration: X: 0.2573
Y: 0.0851
Principal moments and X-Y directions about centroid:
I: 0.0003 along [0.2247 -0.9744]
J: 0.0052 along [0.9744 0.2247]

T450

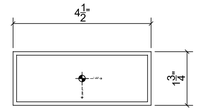

Area: 1.3846
Perimeter: 24.0800
Bounding box: X: -0.8750 -- 0.8750
Y: -2.2500 -- 2.2500
Centroid: X: 0.0000
Y: 0.0000
Moments of inertia: X: 3.4275
Y: 0.7601
Product of inertia: XY: 0.0000
Radii of gyration: X: 1.5734
Y: 0.7409
Principal moments and X-Y directions about centroid:
I: 3.4275 along [1.0000 0.0000]
J: 0.7601 along [0.0000 1.0000]

UCH201

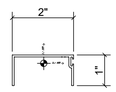

Area: 0.2612
Perimeter: 8.2170
Bounding box: X: -1.0285 -- 0.9715
Y: -0.7258 -- 0.2742
Centroid: X: 0.0000
Y: 0.0000
Moments of inertia: X: 0.0247
Y: 0.1623
Product of inertia: XY: -0.0002
Radii of gyration: X: 0.3076
Y: 0.7881
Principal moments and X-Y directions about centroid:
I: 0.0247 along [1.0000 -0.0012]
J: 0.1623 along [0.0012 1.0000]

31432

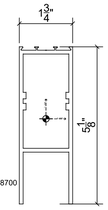

Area: 1.7408
Perimeter: 28.1469
Bounding box: X: -0.8700 -- 0.8700
Y: -2.7773 -- 2.3477
Centroid: X: 0.0000
Y: 0.0000
Moments of inertia: X: 4.4045
Y: 0.9418
Product of inertia: XY: 0.0000
Radii of gyration: X: 1.5167
Y: 0.7355
Principal moments and X-Y directions about centroid:
I: 4.4045 along [1.0000 0.0000]
J: 0.9418 along [0.0000 1.0000]

DS001

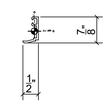

Area: 0.0923
Perimeter: 3.2699
Bounding box: X: -0.3766 -- 0.1284
Y: -0.3842 -- 0.4639
Centroid: X: 0.0000
Y: 0.0000
Moments of inertia: X: 0.0074
Y: 0.0015
Product of inertia: XY: 0.0017
Radii of gyration: X: 0.2838
Y: 0.1285
Principal moments and X-Y directions about centroid:
I: 0.0011 along [0.2525 0.9676]
J: 0.0079 along [-0.9676 0.2525]

DRB811

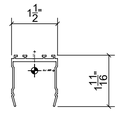

Area: 0.3345
Perimeter: 10.6065
Bounding box: X: -0.7500 -- 0.7500
Y: -1.1711 -- 0.5039
Centroid: X: 0.0000
Y: 0.0000
Moments of inertia: X: 0.0815
Y: 0.1092
Product of inertia: XY: 0.0000
Radii of gyration: X: 0.4937
Y: 0.5713
Principal moments and X-Y directions about centroid:
I: 0.0815 along [1.0000 0.0000]
J: 0.1092 along [0.0000 1.0000]

DRB810

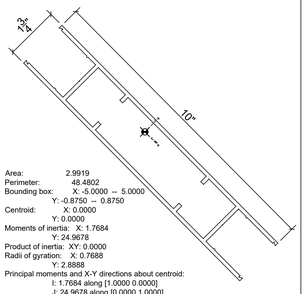

Area: 2.9919
Perimeter: 48.4802
Bounding box: X: -5.0000 -- 5.0000
Y: -0.8750 -- 0.8750
Centroid: X: 0.0000
Y: 0.0000
Moments of inertia: X: 1.7684
Y: 24.9678
Product of inertia: XY: 0.0000
Radii of gyration: X: 0.7688
Y: 2.8888
Principal moments and X-Y directions about centroid:
I: 1.7684 along [1.0000 0.0000]
J: 24.9678 along [0.0000 1.0000]

T700

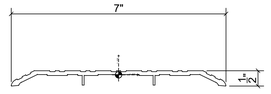

Area: 0.9976
Perimeter: 16.5173
Bounding box: X: -3.5016 -- 3.5015
Y: -0.3657 -- 0.1333
Centroid: X: 0.0000
Y: 0.0000
Moments of inertia: X: 0.0135
Y: 4.2496
Product of inertia: XY: 0.0000
Radii of gyration: X: 0.1164
Y: 2.0639
Principal moments and X-Y directions about centroid:
I: 0.0135 along [1.0000 0.0000]
J: 4.2496 along [0.0000 1.0000]

OPG1911

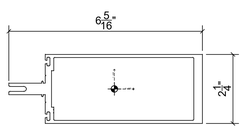

Area: 2.3772
Perimeter: 32.9435
Bounding box: X: -3.4405 -- 2.8705
Y: -1.1251 -- 1.1249
Centroid: X: 0.0000
Y: 0.0000
Moments of inertia: X: 1.5290
Y: 11.3106
Product of inertia: XY: -0.0005
Radii of gyration: X: 0.8020
Y: 2.1813
Principal moments and X-Y directions about centroid:
I: 1.5290 along [1.0000 0.0000]
J: 11.3106 along [0.0000 1.0000]

OPG1913

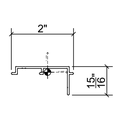

Area: 0.2060
Perimeter: 6.6842
Bounding box: X: -1.1827 -- 0.8449
Y: -0.7453 -- 0.1847
Centroid: X: 0.0000
Y: 0.0000
Moments of inertia: X: 0.0111
Y: 0.0831
Product of inertia: XY: -0.0141
Radii of gyration: X: 0.2318
Y: 0.6350
Principal moments and X-Y directions about centroid:
I: 0.0084 along [0.9827 -0.1854]
J: 0.0857 along [0.1854 0.9827]

M459

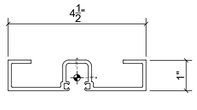

Area: 1.0406
Perimeter: 19.7642
Bounding box: X: -2.2500 -- 2.2500
Y: -0.4229 -- 0.5771
Centroid: X: 0.0000
Y: 0.0000
Moments of inertia: X: 0.1473
Y: 2.2891
Product of inertia: XY: 0.0000
Radii of gyration: X: 0.3762
Y: 1.4832
Principal moments and X-Y directions about centroid:
I: 0.1473 along [1.0000 0.0000]
J: 2.2891 along [0.0000 1.0000]

DS45

Area: 0.1238
Perimeter: 5.4729
Bounding box: X: -0.4063 -- 0.3666
Y: -0.4630 -- 0.3030
Centroid: X: 0.0000
Y: 0.0000
Moments of inertia: X: 0.0070
Y: 0.0093
Product of inertia: XY: -0.0009
Radii of gyration: X: 0.2369
Y: 0.2737
Principal moments and X-Y directions about centroid:
I: 0.0066 along [0.9421 -0.3354]
J: 0.0096 along [0.3354 0.9421]

DSO401

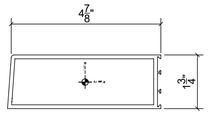

Area: 1.6159
Perimeter: 26.6489
Bounding box: X: -2.5312 -- 2.4688
Y: -0.8666 -- 0.8834
Centroid: X: 0.0000
Y: 0.0000
Moments of inertia: X: 0.8826
Y: 4.6239
Product of inertia: XY: 0.0358
Radii of gyration: X: 0.7390
Y: 1.6916
Principal moments and X-Y directions about centroid:
I: 0.8822 along [1.0000 0.0096]
J: 4.6243 along [-0.0096 1.0000]

31402

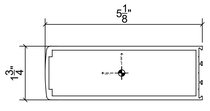

Area: 1.6685
Perimeter: 27.2975
Bounding box: X: -0.8750 -- 0.8750
Y: -2.8291 -- 2.4959
Centroid: X: 0.0000
Y: 0.0000
Moments of inertia: X: 4.9131
Y: 0.9306
Product of inertia: XY: 0.0000
Radii of gyration: X: 1.7160
Y: 0.7468
Principal moments and X-Y directions about centroid:
I: 0.9306 along [0.0000 1.0000]
J: 4.9131 along [-1.0000 0.0000]

31412

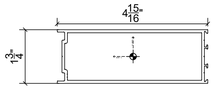

Area: 1.2765
Perimeter: 27.0054
Bounding box: X: -0.8752 -- 0.8750
Y: -2.4340 -- 2.4772
Centroid: X: 0.0000
Y: 0.0000
Moments of inertia: X: 3.4770
Y: 0.7217
Product of inertia: XY: 0.0004
Radii of gyration: X: 1.6504
Y: 0.7519
Principal moments and X-Y directions about centroid:
I: 0.7217 along [0.0002 1.0000]
J: 3.4770 along [-1.0000 0.0002]

31012

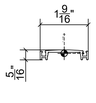

Area: 0.1581
Perimeter: 5.1424
Bounding box: X: -0.7846 -- 0.7826
Y: -0.2112 -- 0.1137
Centroid: X: 0.0000
Y: 0.0000
Moments of inertia: X: 0.0013
Y: 0.0426
Product of inertia: XY: 0.0000
Radii of gyration: X: 0.0903
Y: 0.5191
Principal moments and X-Y directions about centroid:
I: 0.0013 along [1.0000 0.0000]
J: 0.0426 along [0.0002 1.0000]

OPGUCH

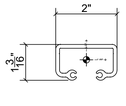

Area: 0.6390
Perimeter: 10.9332
Bounding box: X: -1.0000 -- 1.0000
Y: -0.6688 -- 0.4992
Centroid: X: 0.0000
Y: 0.0000
Moments of inertia: X: 0.1071
Y: 0.3292
Product of inertia: XY: 0.0000
Radii of gyration: X: 0.4093
Y: 0.7178
Principal moments and X-Y directions about centroid:
I: 0.1071 along [1.0000 0.0000]
J: 0.3292 along [0.0000 1.0000]

OPG1578

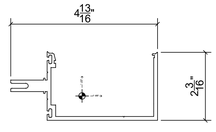

Area: 1.3788
Perimeter: 21.0940
Bounding box: X: -2.3254 -- 2.4606
Y: -0.7933 -- 1.4427
Centroid: X: 0.0000
Y: 0.0000
Moments of inertia: X: 0.5753
Y: 3.5156
Product of inertia: XY: -0.3091
Radii of gyration: X: 0.6460
Y: 1.5968
Principal moments and X-Y directions about centroid:
I: 0.5432 along [0.9946 -0.1034]
J: 3.5477 along [0.1034 0.9946]

OPG5001

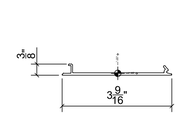

Area: 0.3141
Perimeter: 8.4197
Bounding box: X: -1.8158 -- 1.7622
Y: -0.0602 -- 0.3018
Centroid: X: 0.0000
Y: 0.0000
Moments of inertia: X: 0.0014
Y: 0.3666
Product of inertia: XY: -0.0009
Radii of gyration: X: 0.0669
Y: 1.0803
Principal moments and X-Y directions about centroid:
I: 0.0014 along [1.0000 -0.0025]
J: 0.3666 along [0.0025 1.0000]

OPG1550

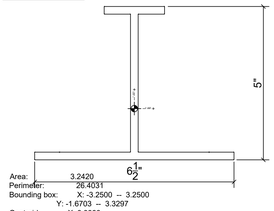

Area: 3.2420
Perimeter: 26.4031
Bounding box: X: -3.2500 -- 3.2500
Y: -1.6703 -- 3.3297
Centroid: X: 0.0000
Y: 0.0000
Moments of inertia: X: 11.6188
Y: 5.8841
Product of inertia: XY: 0.0000
Radii of gyration: X: 1.8931
Y: 1.3472
Principal moments and X-Y directions about centroid:
I: 5.8841 along [0.0000 1.0000]
J: 11.6188 along [-1.0000 0.0000]

OPG1500

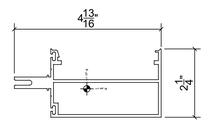

Area: 1.4703
Perimeter: 28.3597
Bounding box: X: -2.3658 -- 2.4202
Y: -0.9280 -- 1.3099
Centroid: X: 0.0000
Y: 0.0000
Moments of inertia: X: 0.5280
Y: 3.4556
Product of inertia: XY: -0.1820
Radii of gyration: X: 0.5993
Y: 1.5330
Principal moments and X-Y directions about centroid:
I: 0.5168 along [0.9981 -0.0618]
J: 3.4669 along [0.0618 0.9981]

OPG5001

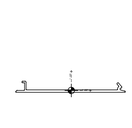

Area: 0.3141
Perimeter: 8.4197
Bounding box: X: -1.8158 -- 1.7622
Y: -0.0602 -- 0.3018
Centroid: X: 0.0000
Y: 0.0000
Moments of inertia: X: 0.0014
Y: 0.3666
Product of inertia: XY: -0.0009
Radii of gyration: X: 0.0669
Y: 1.0803
Principal moments and X-Y directions about centroid:
I: 0.0014 along [1.0000 -0.0025]
J: 0.3666 along [0.0025 1.0000]

OPG1510

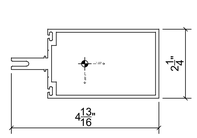

Area: 1.6336
Perimeter: 27.4658
Bounding box: X: -1.1250 -- 1.1250
Y: -2.3937 -- 2.4173
Centroid: X: 0.0000
Y: 0.0000
Moments of inertia: X: 3.8061
Y: 1.0485
Product of inertia: XY: 0.0000
Radii of gyration: X: 1.5264
Y: 0.8012
Principal moments and X-Y directions about centroid:
I: 1.0485 along [0.0000 1.0000]
J: 3.8061 along [-1.0000 0.0000]

OPG5002

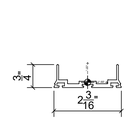

Area: 0.3786
Perimeter: 8.6042
Bounding box: X: -1.0990 -- 1.0990
Y: -0.1709 -- 0.5791
Centroid: X: 0.0000
Y: 0.0000
Moments of inertia: X: 0.0102
Y: 0.1871
Product of inertia: XY: 0.0000
Radii of gyration: X: 0.1645
Y: 0.7030
Principal moments and X-Y directions about centroid:
I: 0.0102 along [1.0000 0.0000]
J: 0.1871 along [0.0000 1.0000]

OPG600225

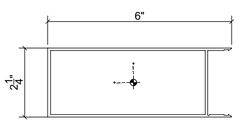

Area: 1.3104
Perimeter: 32.3095
Bounding box: X: -1.1264 -- 1.1236
Y: -3.2022 -- 2.7978
Centroid: X: 0.0000
Y: 0.0000
Moments of inertia: X: 5.2280
Y: 1.2465
Product of inertia: XY: -0.0046
Radii of gyration: X: 1.9974
Y: 0.9753
Principal moments and X-Y directions about centroid:
I: 1.2465 along [0.0011 -1.0000]
J: 5.2280 along [1.0000 0.0011]

OPG9502A

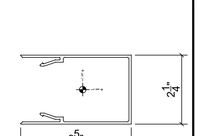

Area: 0.8316
Perimeter: 21.9126
Bounding box: X: -2.0265 -- 1.5805
Y: -1.1250 -- 1.1250
Centroid: X: 0.0000
Y: 0.0000
Moments of inertia: X: 0.8046
Y: 1.1105
Product of inertia: XY: 0.0000
Radii of gyration: X: 0.9836
Y: 1.1556
Principal moments and X-Y directions about centroid:
I: 0.8046 along [1.0000 0.0000]
J: 1.1105 along [0.0000 1.0000]

IDENTIFICATION STAMP
DIV. OF THE STATE ARCHITECT
APP. 03-119458 INC:
REVIEWED FOR
SS ☑ FLS ☑ ACCESS architecture ☐ planning ☐ interiors ☐
DATE: 05/23/2019

tBP/Architecture
4611 Teller Avenue
Newport Beach, CA 92660
ph: 949.673.0300 fx: 949.732.3895

architect

REGISTERED PROFESSIONAL ENGINEER
CRAIG M. ROHRER
No. 84674
CIVIL
STATE OF CALIFORNIA

04/12/19

consultant

IDENTIFICATION STAMP
DIV. OF THE STATE ARCHITECT
OFFICE OF REGULATION SERVICES
APPL 03-
AC. ____ FLS ____ SS ____
DATE ____

DIVISION OF THE STATE ARCHITECT
700 N. ALAMEDA SUITE 500
LOS ANGELES, CALIFORNIA 90012
ph: (213) 897-3995

agency

COMPTON COLLEGE
INSTRUCTIONAL BUILDING No. 2

COMPTON COMMUNITY COLLEGE DISTRICT
1111 E. ARTESIA BLVD. COMPTON, CA.

owner

tBP project number : 20998.00

file name:

drawn by: checked by:

date: 09/14/18

Rev:	date:	description:

THIS DRAWING AND THE DESIGNS, DEPICTIONS, IDEAS AND OTHER INFORMATION CONTAINED HEREIN CONSTITUTE UNPUBLISHED WORK OF tBP/ARCHITECTURE AND SHALL REMAIN THE PROPERTY OF tBP/ARCHITECTURE IN PERPETUITY. NO PART THEREOF SHALL BE REPRODUCED, DISCLOSED, DISTRIBUTED, SOLD, PUBLISHED OR OTHERWISE USED IN ANY WAY WITHOUT THE ADVANCED EXPRESS WRITTEN CONSENT OF tBP/ARCHITECTURE.

drawing title:

SECTION PROPERTIES

drawing no.:

CW0.04

drawing of

OPG-9503

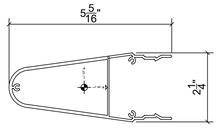

Area: 1.2066
Perimeter: 29.2885
Bounding box: X: -2.4510 -- 2.8547
Y: -1.1259 -- 1.1258
Centroid: X: 0.0000
Y: 0.0000
Moments of inertia: X: 0.7593
Y: 2.8647
Product of inertia: XY: 0.0000
Radii of gyration: X: 0.7933
Y: 1.5408
Principal moments and X-Y directions about centroid:
I: 0.7593 along [1.0000 0.0000]
J: 2.8647 along [0.0000 1.0000]

TH411

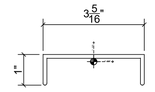

Area: 0.6279
Perimeter: 10.2427
Bounding box: X: -1.6500 -- 1.6500
Y: -0.7682 -- 0.2318
Centroid: X: 0.0000
Y: 0.0000
Moments of inertia: X: 0.0483
Y: 0.9175
Product of inertia: XY: 0.0000
Radii of gyration: X: 0.2774
Y: 1.2088
Principal moments and X-Y directions about centroid:
I: 0.0483 along [1.0000 0.0000]
J: 0.9175 along [0.0000 1.0000]

TH403

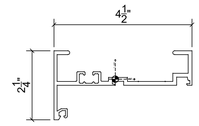

Area: 1.1829
Perimeter: 22.1066
Bounding box: X: -1.9983 -- 2.5017
Y: -1.3239 -- 0.9261
Centroid: X: 0.0000
Y: 0.0000
Moments of inertia: X: 0.3021
Y: 3.2854
Product of inertia: XY: 0.3621
Radii of gyration: X: 0.5053
Y: 1.6666
Principal moments and X-Y directions about centroid:
I: 0.2587 along [0.9929 0.1188]
J: 3.3287 along [-0.1188 0.9929]

TH404

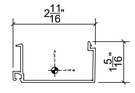

Area: 0.3986
Perimeter: 11.5506
Bounding box: X: -1.3612 -- 1.3244
Y: -0.3941 -- 0.9387
Centroid: X: 0.0000
Y: 0.0000
Moments of inertia: X: 0.0709
Y: 0.4065
Product of inertia: XY: 0.0146
Radii of gyration: X: 0.4218
Y: 1.0098
Principal moments and X-Y directions about centroid:
I: 0.0703 along [0.9991 0.0433]
J: 0.4071 along [-0.0433 0.9991]

TH481

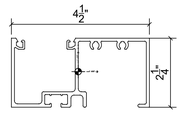

Area: 1.4849
Perimeter: 29.5862
Bounding box: X: -2.1784 -- 2.3216
Y: -1.1618 -- 1.0884
Centroid: X: 0.0000
Y: 0.0000
Moments of inertia: X: 1.0305
Y: 3.4068
Product of inertia: XY: 0.4793
Radii of gyration: X: 0.8330
Y: 1.5147
Principal moments and X-Y directions about centroid:
I: 0.9374 along [0.9817 0.1906]
J: 3.4998 along [-0.1906 0.9817]

TH410

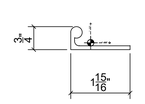

Area: 0.3956
Perimeter: 5.5741
Bounding box: X: -0.6509 -- 1.2831
Y: -0.2247 -- 0.5253
Centroid: X: 0.0000
Y: 0.0000
Moments of inertia: X: 0.0207
Y: 0.1390
Product of inertia: XY: -0.0309
Radii of gyration: X: 0.2290
Y: 0.5927
Principal moments and X-Y directions about centroid:
I: 0.0132 along [0.9712 -0.2383]
J: 0.1466 along [0.2383 0.9712]

UCH13613

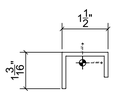

Area: 0.4060
Perimeter: 6.7222
Bounding box: X: -0.6706 -- 0.8294
Y: -0.8448 -- 0.3422
Centroid: X: 0.0000
Y: 0.0000
Moments of inertia: X: 0.0452
Y: 0.1362
Product of inertia: XY: 0.0212
Radii of gyration: X: 0.3335
Y: 0.5791
Principal moments and X-Y directions about centroid:
I: 0.0405 along [0.9764 0.2159]
J: 0.1409 along [-0.2159 0.9764]

OPG9502A

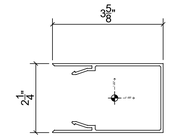

Area: 0.8316
Perimeter: 21.9126
Bounding box: X: -2.0265 -- 1.5805
Y: -1.1250 -- 1.1250
Centroid: X: 0.0000
Y: 0.0000
Moments of inertia: X: 0.8046
Y: 1.1105
Product of inertia: XY: 0.0000
Radii of gyration: X: 0.9836
Y: 1.1556
Principal moments and X-Y directions about centroid:
I: 0.8046 along [1.0000 0.0000]
J: 1.1105 along [0.0000 1.0000]

SSCT500

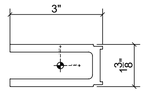

Area: 1.6797
Perimeter: 14.1438
Bounding box: X: -1.6411 -- 1.3789
Y: -0.6875 -- 0.6875
Centroid: X: 0.0000
Y: 0.0000
Moments of inertia: X: 0.4803
Y: 1.3966
Product of inertia: XY: 0.0000
Radii of gyration: X: 0.5347
Y: 0.9118
Principal moments and X-Y directions about centroid:
I: 0.4803 along [1.0000 0.0000]
J: 1.3966 along [0.0000 1.0000]

OPG9501

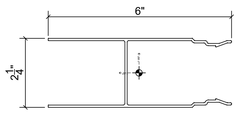

Area: 1.0757
Perimeter: 28.5461
Bounding box: X: -1.1250 -- 1.1250
Y: -3.0166 -- 2.9620
Centroid: X: 0.0000
Y: 0.0000
Moments of inertia: X: 2.7977
Y: 1.0948
Product of inertia: XY: 0.0000
Radii of gyration: X: 1.6127
Y: 1.0088
Principal moments and X-Y directions about centroid:
I: 1.0948 along [0.0000 -1.0000]
J: 2.7977 along [1.0000 0.0000]

OPG600225

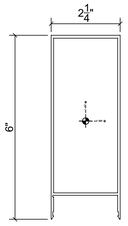

Area: 1.3104
Perimeter: 32.3095
Bounding box: X: -1.1284 -- 1.1236
Y: -3.2022 -- 2.7978
Centroid: X: 0.0000
Y: 0.0000
Moments of inertia: X: 5.2280
Y: 1.2465
Product of inertia: XY: -0.0046
Radii of gyration: X: 1.9974
Y: 0.9753
Principal moments and X-Y directions about centroid:
I: 1.2465 along [0.0011 -1.0000]
J: 5.2280 along [1.0000 0.0011]

OPG9503

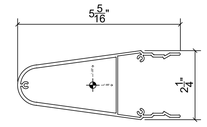

Area: 1.2066
Perimeter: 29.2885
Bounding box: X: -2.4510 -- 2.8547
Y: -1.1259 -- 1.1258
Centroid: X: 0.0000
Y: 0.0000
Moments of inertia: X: 0.7593
Y: 2.8647
Product of inertia: XY: 0.0000
Radii of gyration: X: 0.7933
Y: 1.5408
Principal moments and X-Y directions about centroid:
I: 0.7593 along [1.0000 0.0000]
J: 2.8647 along [0.0000 1.0000]

HC620

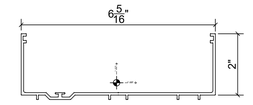

Area: 0.9188
Perimeter: 23.4121
Bounding box: X: -3.1112 -- 3.2208
Y: -0.5477 -- 1.5983
Centroid: X: 0.0000
Y: 0.0000
Moments of inertia: X: 0.3574
Y: 5.2050
Product of inertia: XY: 0.0361
Radii of gyration: X: 0.6237
Y: 2.3802
Principal moments and X-Y directions about centroid:
I: 0.3571 along [1.0000 0.0074]
J: 5.2053 along [-0.0074 1.0000]

26290

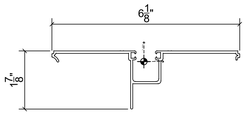

Area: 0.7485
Perimeter: 20.2136
Bounding box: X: -2.9996 -- 3.1244
Y: -1.5492 -- 0.3461
Centroid: X: 0.0000
Y: 0.0000
Moments of inertia: X: 0.1654
Y: 1.8688
Product of inertia: XY: 0.0293
Radii of gyration: X: 0.4701
Y: 1.5801
Principal moments and X-Y directions about centroid:
I: 0.1649 along [0.9999 0.0172]
J: 1.8693 along [-0.0172 0.9999]

26263

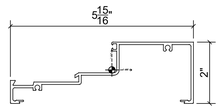

Area: 0.9442
Perimeter: 23.7315
Bounding box: X: -3.3100 -- 2.6580
Y: -1.0927 -- 0.9073
Centroid: X: 0.0000
Y: 0.0000
Moments of inertia: X: 0.3928
Y: 3.9365
Product of inertia: XY: 0.6526
Radii of gyration: X: 0.6450
Y: 2.0419
Principal moments and X-Y directions about centroid:
I: 0.2764 along [0.9845 0.1755]
J: 4.0528 along [-0.1755 0.9845]

26263ST

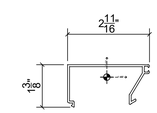

Area: 0.3755
Perimeter: 11.8155
Bounding box: X: -1.2811 -- 1.3909
Y: -0.9800 -- 0.4075
Centroid: X: 0.0000
Y: 0.0000
Moments of inertia: X: 0.0746
Y: 0.3524
Product of inertia: XY: 0.0200
Radii of gyration: X: 0.4457
Y: 0.9688
Principal moments and X-Y directions about centroid:
I: 0.0732 along [0.9975 0.0713]
J: 0.3539 along [-0.0713 0.9975]

26149CLIP

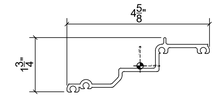

Area: 0.7533
Perimeter: 14.2296
Bounding box: X: -2.3867 -- 2.2633
Y: -0.8456 -- 0.9344
Centroid: X: 0.0000
Y: 0.0100
Moments of inertia: X: 0.2159
Y: 1.3297
Product of inertia: XY: 0.4942
Radii of gyration: X: 0.5354
Y: 1.3286
Principal moments and X-Y directions about centroid:
I: 0.0282 along [0.9349 0.3550]
J: 1.5173 along [-0.3550 0.9349]

26270

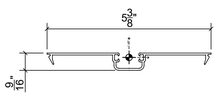

Area: 0.4763
Perimeter: 15.0093
Bounding box: X: -2.6730 -- 2.6730
Y: -0.4205 -- 0.1445
Centroid: X: 0.0000
Y: 0.0000
Moments of inertia: X: 0.0149
Y: 1.1050
Product of inertia: XY: 0.0000
Radii of gyration: X: 0.1769
Y: 1.5232
Principal moments and X-Y directions about centroid:
I: 0.0149 along [1.0000 0.0000]
J: 1.1050 along [0.0000 1.00

26294

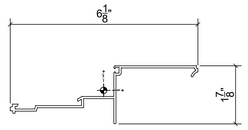

Area: 0.6541
Perimeter: 18.6384
Bounding box: X: -3.0466 -- 3.0737
Y: -1.0932 -- 0.8018
Centroid: X: 0.0000
Y: 0.0000
Moments of inertia: X: 0.2352
Y: 1.8466
Product of inertia: XY: 0.5301
Radii of gyration: X: 0.5996
Y: 1.6802
Principal moments and X-Y directions about centroid:
I: 0.0764 along [0.9580 0.2869]
J: 2.0054 along [-0.2869 0.9580]

SC722

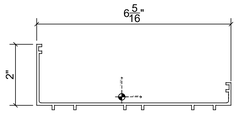

Area: 0.8054
Perimeter: 20.4330
Bounding box: X: -2.7740 -- 3.5602
Y: -0.4213 -- 1.7147
Centroid: X: 0.0000
Y: 0.0000
Moments of inertia: X: 0.2034
Y: 4.0410
Product of inertia: XY: -0.3849
Radii of gyration: X: 0.5026
Y: 2.2400
Principal moments and X-Y directions about centroid:
I: 0.1652 along [0.9951 -0.0988]
J: 4.0792 along [0.0988 0.9951]

26239

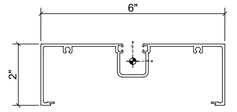

Area: 1.0976
Perimeter: 27.8200
Bounding box: X: -3.0000 -- 3.0000
Y: -1.4379 -- 0.5621
Centroid: X: 0.0000
Y: 0.0000
Moments of inertia: X: 0.4267
Y: 4.9385
Product of inertia: XY: 0.0000
Radii of gyration: X: 0.6236
Y: 2.1212
Principal moments and X-Y directions about centroid:
I: 0.4267 along [1.0000 0.0000]
J: 4.9385 along [0.0000 1.0000]

IDENTIFICATION STAMP
DIV. OF THE STATE ARCHITECT
APP. 03-119458 INC:
REVIEWED FOR
SS ☑ FLS ☑ ACCESS ☐ planning ☐ interior ☐
DATE: 05/23/2019

tBP/Architecture
4611 Teller Avenue
Newport Beach, CA 92660
ph: 949.673.0300 fx: 949.732.3895

architect

REGISTERED PROFESSIONAL ENGINEER
CRAIG M. ROPNER
No. 84674
CIVIL
STATE OF CALIFORNIA

04/12/19

consultant

IDENTIFICATION STAMP
DIV. OF THE STATE ARCHITECT
OFFICE OF REGULATION SERVICES
APPL 03-
AC. ____ FLS ____ SS ____
DATE ____

DIVISION OF THE STATE ARCHITECT
700 N. ALAMEDA SUITE 500
LOS ANGELES, CALIFORNIA 90012
ph: (213) 897-3995

agency

COMPTON COLLEGE
INSTRUCTIONAL BUILDING No. 2

COMPTON COMMUNITY COLLEGE DISTRICT
1111 E. ARTESIA BLVD. COMPTON, CA.

owner

tBP project number : 20998.00

file name:

drawn by: checked by:

date: 09/14/18

Rev:	date:	description:

THIS DRAWING AND THE DESIGNS, DEPICTIONS, IDEAS AND OTHER INFORMATION CONTAINED HEREIN CONSTITUTE UNPUBLISHED WORK OF tBP/ARCHITECTURE AND SHALL REMAIN THE PROPERTY OF tBP/ARCHITECTURE IN PERPETUITY. NO PART THEREOF SHALL BE REPRODUCED, DISCLOSED, DISTRIBUTED, SOLD, PUBLISHED OR OTHERWISE USED IN ANY WAY WITHOUT THE ADVANCED EXPRESS WRITTEN CONSENT OF tBP/ARCHITECTURE.

drawing title:

SECTION PROPERTIES

drawing no.:

CW0.05

drawing of

NORTH

1.01 FIRST FLOOR PLAN

Arch Ref: A1-1

IDENTIFICATION STAMP
DIV. OF THE STATE ARCHITECT
APP. 03-119458 INC:
REVIEWED FOR
SS ☑ FLS ☑ ACS ☑
DATE:05/23/2019

DIVISION OF STATE ARCHITECT
355 South Grand Avenue, Suite 2100
Los Angeles, California. 90012
ph: (213) 897-3995 Fax: (213) 897-3159
agency

tBP
architecture
planning
interiors

tBP/Architecture
4611 Teller Avenue
Newport Beach, CA 92660
ph: 949.673.0300 fx: 949.732.3895
architect

REGISTERED PROFESSIONAL ENGINEER
CRAIG M. HORNER
No. 84674
CIVIL
STATE OF CALIFORNIA
04/12/19
consultant

COMPTON COLLEGE
INSTRUCTIONAL BUILDING No. 2

COMPTON COMMUNITY COLLEGE DISTRICT
1111 E. ARTESIA BLVD. COMPTON, CA.

owner

tBP project number : 20998.00
file name:
drawn by: checked by:
date: 10/20/18

Rev:	date:	description:

THIS DRAWING AND THE DESIGNS, DEPICTIONS, IDEAS AND OTHER INFORMATION CONTAINED HEREIN CONSTITUTE UNPUBLISHED WORK OF tBP/ARCHITECTURE AND SHALL REMAIN THE PROPERTY OF tBP/ARCHITECTURE IN PERPETUITY. NO PART THEREOF SHALL BE REPRODUCED, DISCLOSED, DISTRIBUTED, SOLD, PUBLISHED OR OTHERWISE USED IN ANY WAY WITHOUT THE ADVANCED EXPRESS WRITTEN CONSENT OF tBP/ARCHITECTURE.

SCALE : 1/8" = 1' - 0"

drawing title:
FIRST FLOOR PLAN

drawing no.:
CW1.01

drawing of

1.02 SECOND FLOOR PLAN

Arch Ref: A1-2

IDENTIFICATION STAMP
DIV. OF THE STATE ARCHITECT
APP. 03-119458 INC:
REVIEWED FOR
SS ☑ FLS ☑ ACS ☑
DATE:05/23/2019

DIVISION OF STATE ARCHITECT
355 South Grand Avenue, Suite 2100
Los Angeles, California. 90012
ph: (213) 897-3995 Fax: (213) 897-3159
agency

tBP
architecture
planning
interiors

tBP/Architecture
4611 Teller Avenue
Newport Beach, CA 92660
ph: 949.673.0300 fx: 949.732.3895
architect

REGISTERED PROFESSIONAL ENGINEER
CRAIG M. HORNER
No. 84674
CIVIL
STATE OF CALIFORNIA
04/12/19
consultant

COMPTON COLLEGE
INSTRUCTIONAL BUILDING No. 2

COMPTON COMMUNITY COLLEGE DISTRICT
1111 E. ARTESIA BLVD. COMPTON, CA.

owner

tBP project number : 20998.00

file name:

drawn by: checked by:

date: 10/20/18

Rev:	date:	description:

THIS DRAWING AND THE DESIGNS, DEPICTIONS, IDEAS AND OTHER INFORMATION CONTAINED HEREIN CONSTITUTE UNPUBLISHED WORK OF tBP/ARCHITECTURE AND SHALL REMAIN THE PROPERTY OF tBP/ARCHITECTURE IN PERPETUITY. NO PART THEREOF SHALL BE REPRODUCED, DISCLOSED, DISTRIBUTED, SOLD, PUBLISHED OR OTHERWISE USED IN ANY WAY WITHOUT THE ADVANCED EXPRESS WRITTEN CONSENT OF tBP/ARCHITECTURE.

SCALE: 1/8" = 1' - 0"

drawing title:
SECOND FLOOR PLAN

drawing no.:
CW1.02

drawing of

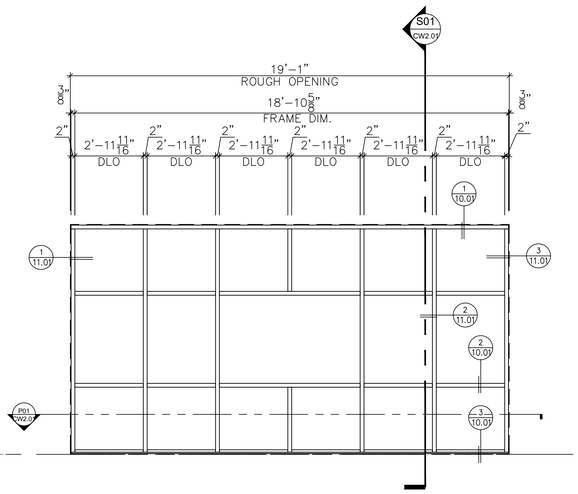

SF-6 WINDOW WALL ELEVATION
Ref. Arch : SF-6/8.51

- FRAME : 2 " x 6" AR600 SERIES
- GLASS : 1/4" GLASS
- Q'TY : (SEE TABLE FOR LOCATION)

DISTRIBUTION

FLOOR	GRID	QTY (SETS)
1ST	4.3 - 5	1
QTY TOTAL		1

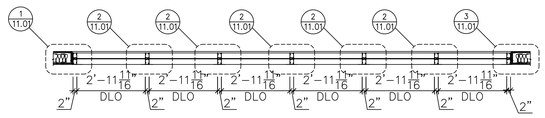

P01 AR-600 CW PLAN
ARCH. REF. : --/--
SHOP. REF. : X/XX

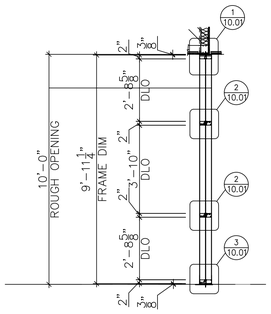

S01 AR-600 SECTION
ARCH. REF. : --
SHOP. REF. : X/XX

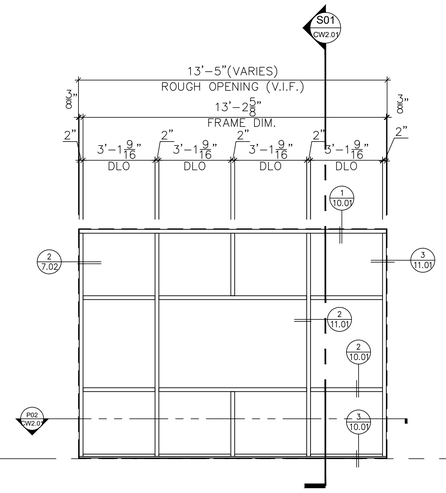

SF-4 WINDOW WALL ELEVATION
Ref. Arch : SF-4/8.51

- FRAME : 2 " x 6" AR600 SERIES
- GLASS : 1/4" GLASS
- Q'TY : (SEE TABLE FOR LOCATION)

DISTRIBUTION

FLOOR	ELEVATION	QTY (SETS)
2ND	5	5
1ST	1	1
QTY TOTAL		6

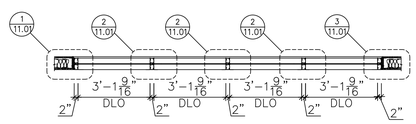

P02 AR-600 CW PLAN
ARCH. REF. : --/--
SHOP. REF. : X/XX

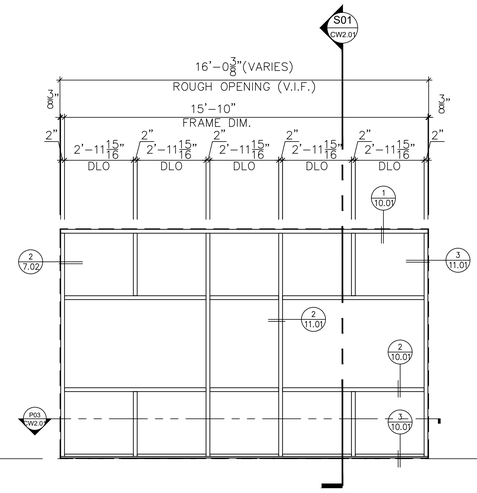

SF-5 WINDOW WALL ELEVATION
Ref. Arch : SF-5/8.51

- FRAME : 2 " x 6" AR600 SERIES
- GLASS : 1/4" GLASS
- Q'TY : (SEE TABLE FOR LOCATION)

DISTRIBUTION

FLOOR	ELEVATION	QTY (SETS)
2ND	2	2
1ST	4	4
QTY TOTAL		6

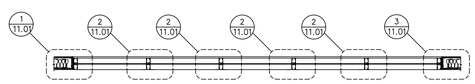

P03 AR-600 CW PLAN
ARCH. REF. : --/--
SHOP. REF. : X/XX

IDENTIFICATION STAMP
DIV. OF THE STATE ARCHITECT
APP. 03-119458 INC:
REVIEWED FOR
SS ☑ FLS ☑ ACS ☑
DATE:05/23/2019

DIVISION OF STATE ARCHITECT
355 South Grand Avenue, Suite 2100
Los Angeles, California. 90012
ph: (213) 897-3995 Fax: (213) 897-3159
agency

tBP
architecture
planning
interiors

tBP/Architecture
4611 Teller Avenue
Newport Beach, CA 92660
ph: 949.673.0300 fx: 949.732.3895
architect

REGISTERED PROFESSIONAL ENGINEER
CRAIG M. HOSKINS
No. 84674
CIVIL
STATE OF CALIFORNIA
04/12/19
consultant

COMPTON COLLEGE
INSTRUCTIONAL BUILDING No. 2

COMPTON COMMUNITY COLLEGE DISTRICT
1111 E. ARTESIA BLVD. COMPTON, CA.

owner

tBP project number : 20998.00
file name:
drawn by: checked by:
date: 10/20/18

Rev: date: description:

THIS DRAWING AND THE DESIGNS, DEPICTIONS, IDEAS AND OTHER INFORMATION CONTAINED HEREIN CONSTITUTE UNPUBLISHED WORK OF tBP/ARCHITECTURE AND SHALL REMAIN THE PROPERTY OF tBP/ARCHITECTURE IN PERPETUITY. NO PART HEREOF SHALL BE REPRODUCED, DISCLOSED, DISTRIBUTED, SOLD, PUBLISHED OR OTHERWISE USED IN ANY WAY WITHOUT THE ADVANCED EXPRESS WRITTEN CONSENT OF tBP/ARCHITECTURE.

SCALE : 3/8" = 1'-0"

drawing title:
ELEVATION
AR600

drawing no.:
CW2.01

drawing of

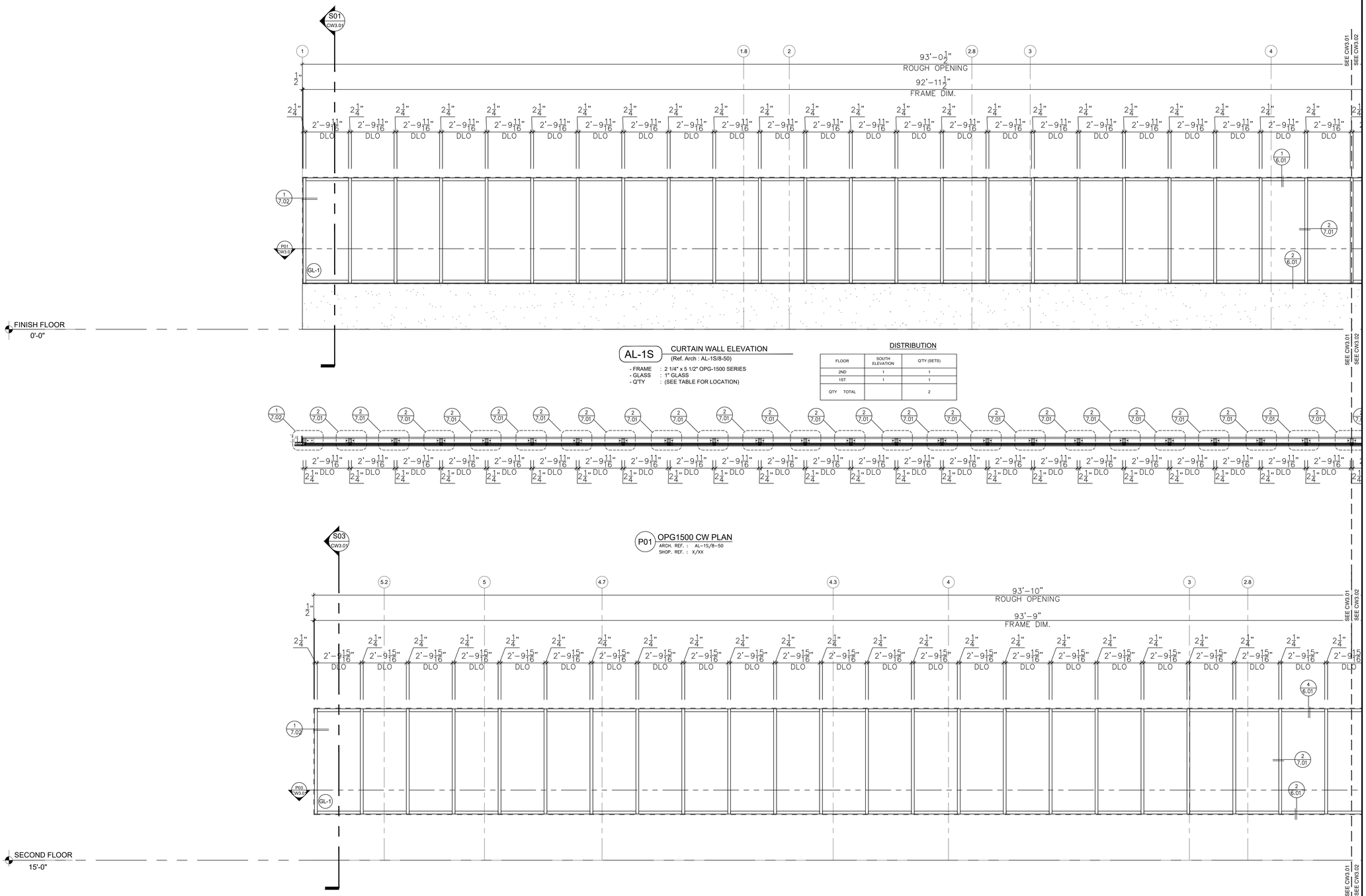

AL-1S CURTAIN WALL ELEVATION

(Ref. Arch : AL-1S/8-50)

- FRAME : 2 1/4" x 5 1/2" OPG-1500 SERIES
- GLASS : 1" GLASS
- Q'TY : (SEE TABLE FOR LOCATION)

DISTRIBUTION

FLOOR	SOUTH ELEVATION	Q'TY (SETS)
2ND	1	1
1ST	1	1
QTY TOTAL		2

P01 OPG1500 CW PLAN

ARCH. REF. : AL-1S/8-50
SHOP. REF. : X/XX

AL-1N CURTAIN WALL ELEVATION

(Ref. Arch : AL-1N/8-50)

- FRAME : 2 1/4" x 5 1/2" OPG-1500 SERIES
- GLASS : 1" GLASS
- Q'TY : (SEE TABLE FOR LOCATION)

DISTRIBUTION

FLOOR	NORTH ELEVATION	Q'TY (SETS)
2ND	1	1
QTY TOTAL		1

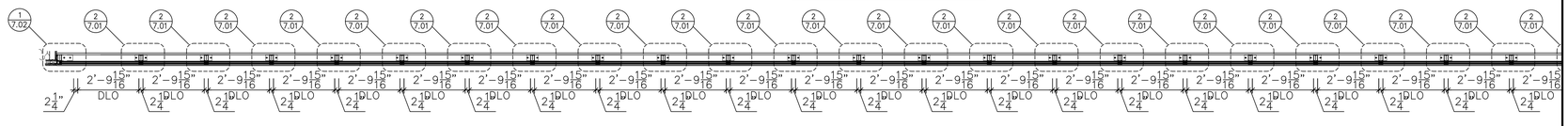

P03 OPG1500 CW PLAN

ARCH. REF. : AL-1N/8-50
SHOP. REF. : X/XX

IDENTIFICATION STAMP
DIV. OF THE STATE ARCHITECT
APP. 03-119458 INC:
REVIEWED FOR
SS ☑ FLS ☑ ACS ☑
DATE:05/23/2019

DIVISION OF STATE ARCHITECT
355 South Grand Avenue, Suite 2100
Los Angeles, California. 90012
ph: (213) 897-3995 Fax: (213) 897-3159
agency

tBP
architecture
planning
interiors

tBP/Architecture
4611 Teller Avenue
Newport Beach, CA 92660
ph: 949.673.0300 fx: 949.732.3895
architect

REGISTERED PROFESSIONAL ENGINEER
CRAIG M. HORNER
No. 84674
CIVIL
STATE OF CALIFORNIA
04/12/19

consultant

COMPTON COLLEGE
INSTRUCTIONAL BUILDING No. 2

COMPTON COMMUNITY COLLEGE DISTRICT
1111 E. ARTESIA BLVD. COMPTON, CA.

owner

tBP project number : 20998.00

file name:

drawn by: checked by:

date: 10/20/18

Rev:	date:	description:

THIS DRAWING AND THE DESIGNS, DEPICTIONS, IDEAS AND OTHER INFORMATION CONTAINED HEREIN CONSTITUTE UNPUBLISHED WORK OF tBP/ARCHITECTURE AND SHALL REMAIN THE PROPERTY OF tBP/ARCHITECTURE IN PERPETUITY. NO PART THEREOF SHALL BE REPRODUCED, DISCLOSED, DISTRIBUTED, SOLD, PUBLISHED OR OTHERWISE USED IN ANY WAY WITHOUT THE ADVANCED EXPRESS WRITTEN CONSENT OF tBP/ARCHITECTURE.

SCALE : 3/8" = 1'-0"

drawing title:
ELEVATION
OPG 1500

drawing no.:
CW3.01

drawing of

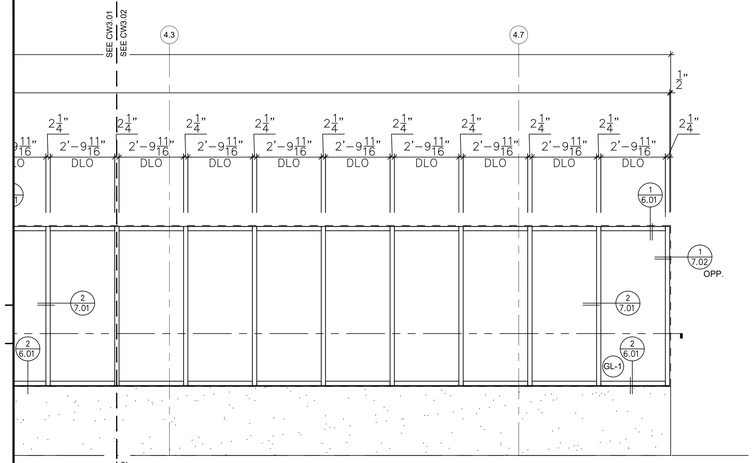

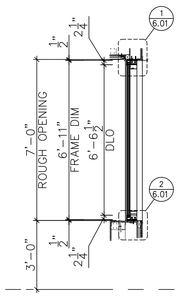

AL-1S CURTAIN WALL ELEVATION

(Ref. Arch : AL-1S/8-50)

- FRAME : 2 1/4" x 5 1/2" OPG-1500 SERIES
- GLASS : 1" GLASS
- Q'TY : (SEE TABLE FOR LOCATION)

DISTRIBUTION

FLOOR	SOUTH ELEVATION	Q'TY (SETS)
2ND	1	1
1ST	1	1
QTY TOTAL		2

S01 OPG1500 CW SECTION
ARCH. REF. : AL-1S/8-50
SHOP. REF. : X/XX

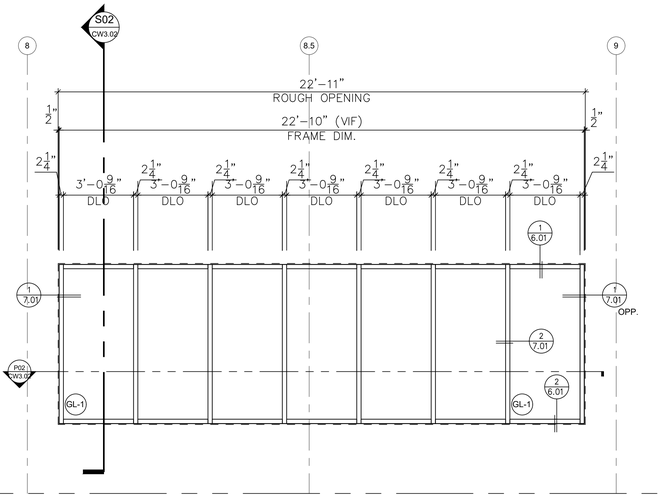

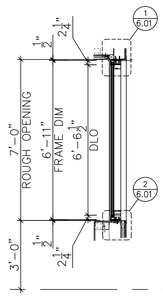

AL-7S CURTAIN WALL ELEVATION

(Ref. Arch : AL-10S/8-50)

- FRAME : 2 1/4" x 5 1/2" OPG-1500 SERIES
- GLASS : 1" GLASS
- Q'TY : (SEE TABLE FOR LOCATION)

DISTRIBUTION

FLOOR	SOUTH ELEVATION	Q'TY (SETS)
2ND	1	1
QTY TOTAL		1

S02 OPG1500 CW SECTION
ARCH. REF. : AL-7S/8-50
SHOP. REF. : X/XX

SECOND FLOOR
15'-0"

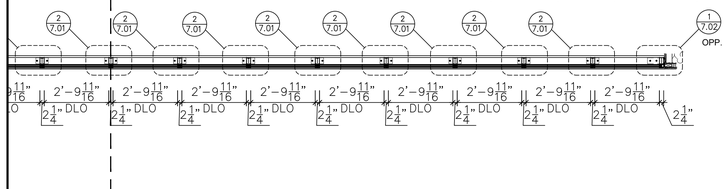

P01 OPG1500 CW PLAN
ARCH. REF. : AL-1S/8-50
SHOP. REF. : X/XX

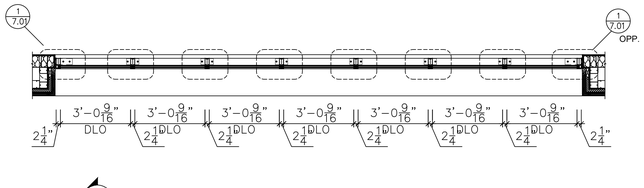

P02 OPG1500 CW PLAN
ARCH. REF. : AL-7S/8-50
SHOP. REF. : X/XX

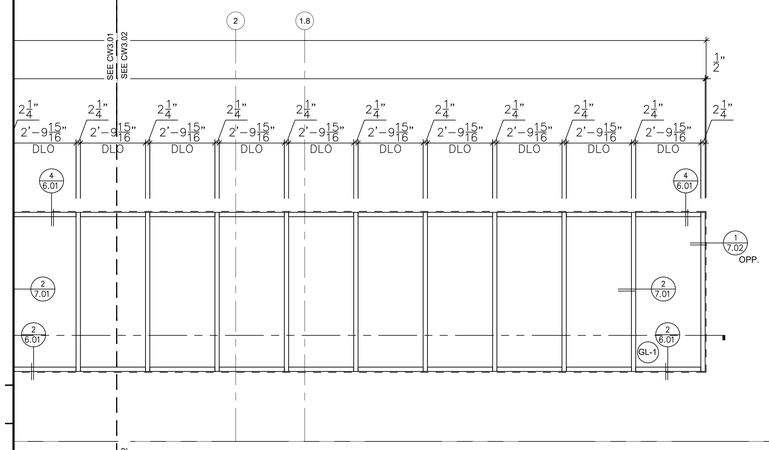

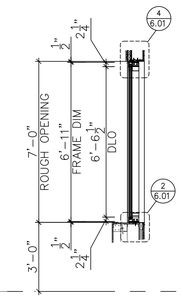

AL-1N CURTAIN WALL ELEVATION

(Ref. Arch : AL-1N/8-50)

- FRAME : 2 1/4" x 5 1/2" OPG-1500 SERIES
- GLASS : 1" GLASS
- Q'TY : (SEE TABLE FOR LOCATION)

DISTRIBUTION

FLOOR	NORTH ELEVATION	Q'TY (SETS)
2ND	1	1
QTY TOTAL		1

S03 OPG1500 CW SECTION
ARCH. REF. : AL-1N/8-50
SHOP. REF. : X/XX

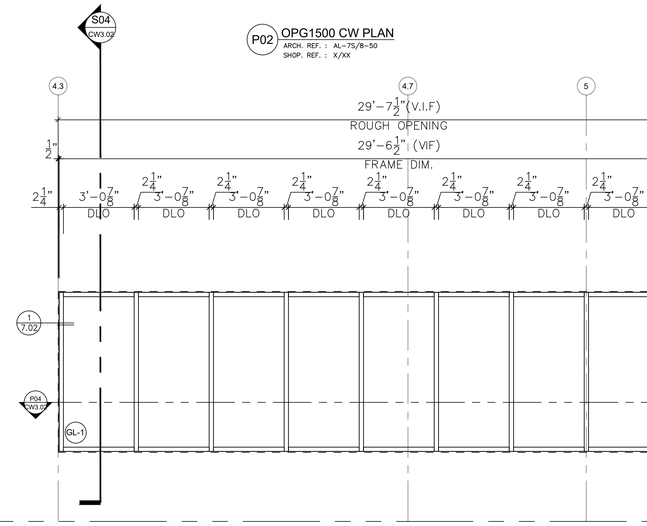

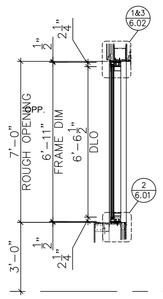

AL-9N CURTAIN WALL ELEVATION

(Ref. Arch : AL-9N/8-50)

- FRAME : 2 1/4" x 5 1/2" OPG-1500 SERIES
- GLASS : 1" GLASS
- Q'TY : (SEE TABLE FOR LOCATION)

DISTRIBUTION

FLOOR	NORTH ELEVATION	Q'TY (SETS)
1ST	1	1
QTY TOTAL		1

S04 OPG1500 CW SECTION
ARCH. REF. : AL-9N/8-50
SHOP. REF. : X/XX

FIRST FLOOR
0'-0"

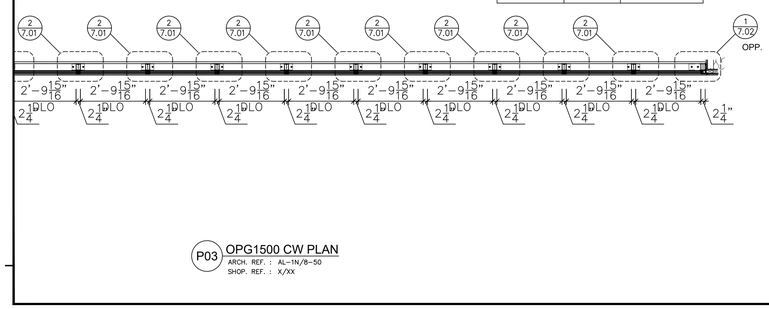

P03 OPG1500 CW PLAN
ARCH. REF. : AL-1N/8-50
SHOP. REF. : X/XX

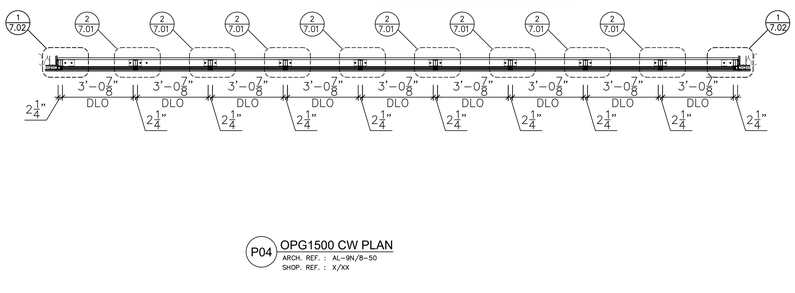

P04 OPG1500 CW PLAN
ARCH. REF. : AL-9N/8-50
SHOP. REF. : X/XX

IDENTIFICATION STAMP
DIV. OF THE STATE ARCHITECT
APP. 03-119458 INC:
REVIEWED FOR
SS ☑ FLS ☑ ACS ☑
DATE:05/23/2019

DIVISION OF STATE ARCHITECT
355 South Grand Avenue, Suite 2100
Los Angeles, California. 90012
ph: (213) 897-3995 Fax: (213) 897-3159
agency

tBP
architecture
planning
interiors

tBP/Architecture
4611 Teller Avenue
Newport Beach, CA 92660
ph: 949.673.0300 fx: 949.732.3895
architect

REGISTERED PROFESSIONAL ENGINEER
CRAIG M. HOSLER
No. 84674
CIVIL
STATE OF CALIFORNIA
04/12/19

consultant

COMPTON COLLEGE
INSTRUCTIONAL BUILDING No. 2

COMPTON COMMUNITY COLLEGE DISTRICT
1111 E. ARTESIA BLVD. COMPTON, CA.

owner

tBP project number : 20998.00
file name:
drawn by: checked by:
date: 10/20/18

Rev:	date:	description:

THIS DRAWING AND THE DESIGNS, DEPICTIONS, IDEAS AND OTHER INFORMATION CONTAINED HEREIN, CONSTITUTE UNPUBLISHED WORK OF tBP/ARCHITECTURE AND SHALL REMAIN THE PROPERTY OF tBP/ARCHITECTURE IN PERPETUITY. NO PART THEREOF SHALL BE REPRODUCED, DISCLOSED, DISTRIBUTED, SOLD, PUBLISHED OR OTHERWISE USED IN ANY WAY WITHOUT THE ADVANCED EXPRESS WRITTEN CONSENT OF tBP/ARCHITECTURE.

SCALE : 3/8" = 1'-0"

drawing title:
ELEVATION
OPG 1500

drawing no.:
CW3.02

drawing of

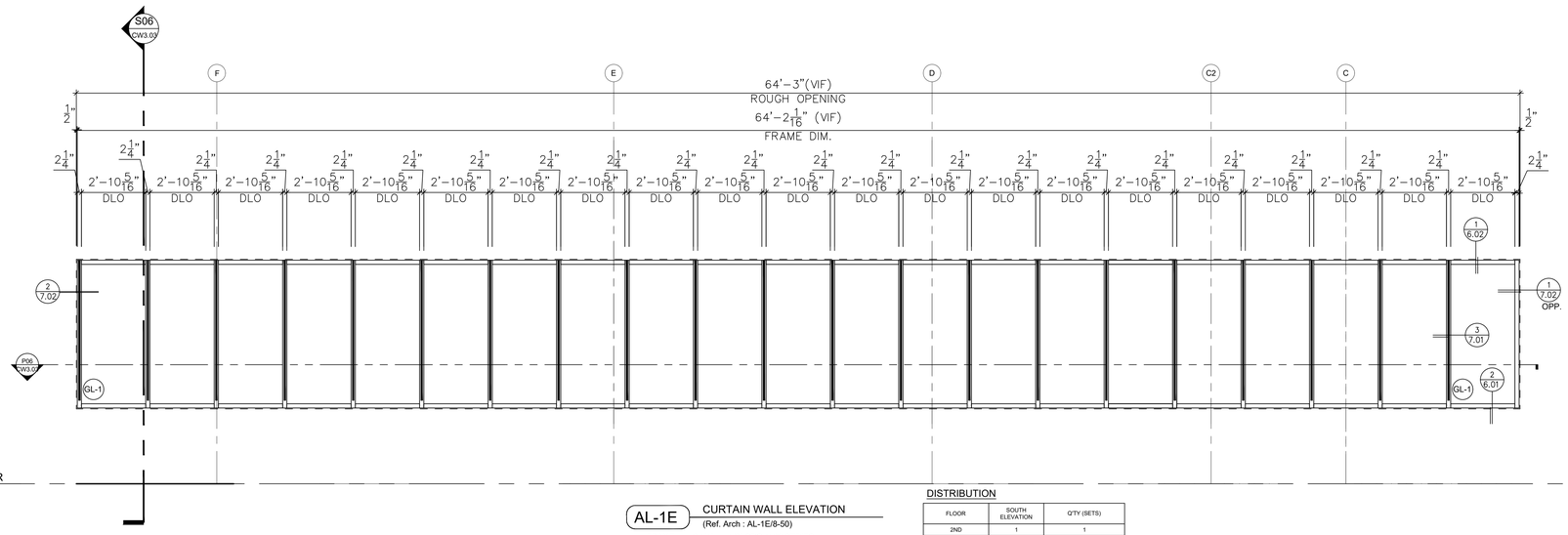

AL-1E CURTAIN WALL ELEVATION
(Ref. Arch : AL-1E/8-50)

- FRAME : 2 1/4" x 5 1/2" OPG-1500 SERIES
- GLASS : 1" GLASS
- Q'TY : (SEE TABLE FOR LOCATION)

DISTRIBUTION

FLOOR	SOUTH ELEVATION	Q'TY (SETS)
2ND	1	1
Q'TY TOTAL		1

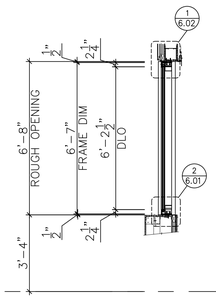

S06 OPG1500 CW SECTION
ARCH. REF. : AL-1E/8-50
SHOP. REF. : X/XX

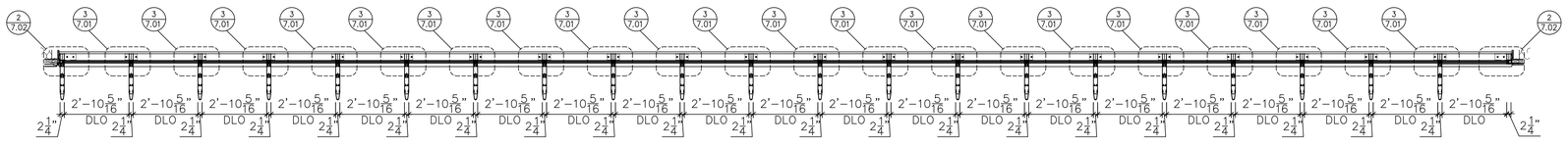

P06 OPG1500 CW PLAN
ARCH. REF. : AL-1E/8-50
SHOP. REF. : X/XX

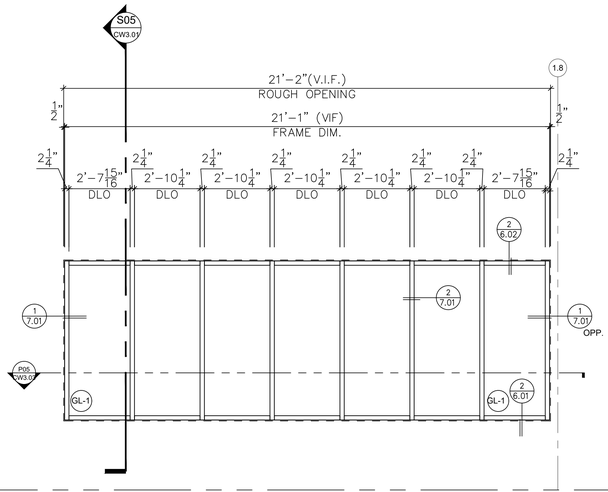

AL-10N CURTAIN WALL ELEVATION
(Ref. Arch : AL-10N/8-50)

- FRAME : 2 1/4" x 5 1/2" OPG-1500 SERIES
- GLASS : 1" GLASS
- Q'TY : (SEE TABLE FOR LOCATION)

DISTRIBUTION

FLOOR	NORTH ELEVATION	Q'TY (SETS)
1ST	1	1
Q'TY TOTAL		1

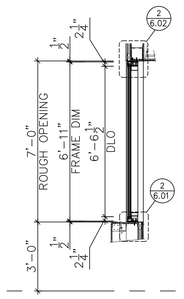

S05 OPG1500 CW SECTION
ARCH. REF. : AL-10N/8-50
SHOP. REF. : X/XX

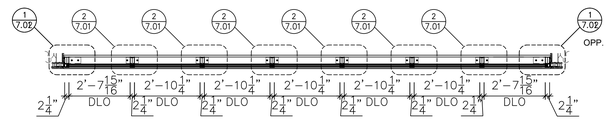

P05 OPG1500 CW PLAN
ARCH. REF. : AL-10N/8-50
SHOP. REF. : X/XX

IDENTIFICATION STAMP
DIV. OF THE STATE ARCHITECT
APP. 03-119458 INC:
REVIEWED FOR
SS ☑ FLS ☑ ACS ☑
DATE:05/23/2019

DIVISION OF STATE ARCHITECT
355 South Grand Avenue, Suite 2100
Los Angeles, California. 90012
ph: (213) 897-3995 Fax: (213) 897-3159
agency

tBP
architecture
planning
interiors

tBP/Architecture
4611 Teller Avenue
Newport Beach, CA 92660
ph: 949.673.0300 fx: 949.732.3895
architect

REGISTERED PROFESSIONAL ENGINEER
CRAIG M. HOHBACH
No. 84674
CIVIL
STATE OF CALIFORNIA
04/12/19
consultant

COMPTON COLLEGE
INSTRUCTIONAL BUILDING No. 2

COMPTON COMMUNITY COLLEGE DISTRICT
1111 E. ARTESIA BLVD. COMPTON, CA.

owner

tBP project number : 20998.00
file name:
drawn by: checked by:
date: 10/20/18

Rev:	date:	description:

THIS DRAWING AND THE DESIGNS, DEPICTIONS, IDEAS AND OTHER INFORMATION CONTAINED HEREIN CONSTITUTE UNPUBLISHED WORK OF tBP/ARCHITECTURE AND SHALL REMAIN THE PROPERTY OF tBP/ARCHITECTURE IN PERPETUITY. NO PART THEREOF SHALL BE REPRODUCED, DISCLOSED, DISTRIBUTED, SOLD, PUBLISHED OR OTHERWISE USED IN ANY WAY WITHOUT THE ADVANCED EXPRESS WRITTEN CONSENT OF tBP/ARCHITECTURE.

SCALE : 3/8" = 1'-0"

drawing title:
ELEVATION
OPG 1500

drawing no.:
CW3.03

drawing of

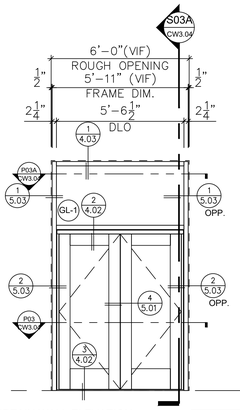

AL-6N CURTAIN WALL ELEVATION
(Ref. Arch : AL-6N/8-50)

- FRAME : 2 1/4" x 7" OPG-1900 SERIES
- GLASS : 1" GLASS
- QTY : (SEE TABLE FOR LOCATION)

DOUBLE DOOR #–
H/W #–
WxH=5'-6 3/4"x 6'-9 1/8"

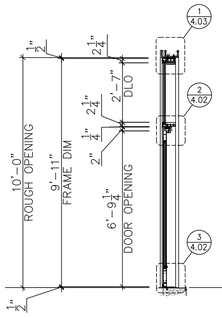

S03A OPG1900 CW SECTION
ARCH. REF. : AL-6N/8-50
SHOP. REF. : X/XX

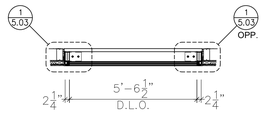

P03A OPG1900 CW PLAN
ARCH. REF. : AL-6N/8-50
SHOP. REF. : X/XX

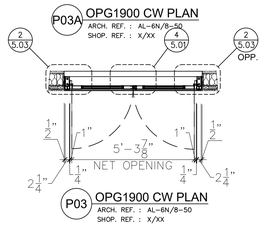

P03 OPG1900 CW PLAN
ARCH. REF. : AL-6N/8-50
SHOP. REF. : X/XX

DISTRIBUTION

FLOOR	NORTH ELEVATION	QTY (SETS)
2ND	1	1
QTY TOTAL		1

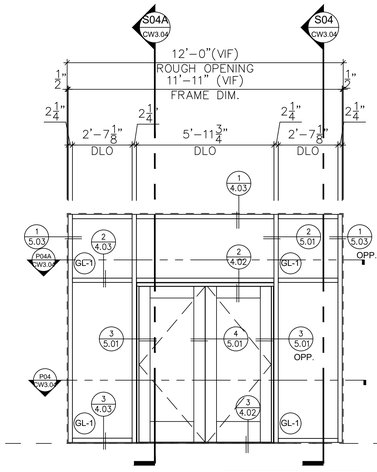

AL-7W CURTAIN WALL ELEVATION
(Ref. Arch : AL-7W/8-50)

- FRAME : 2 1/4" x 7" OPG-1900 SERIES
- GLASS : 1" GLASS
- QTY : (SEE TABLE FOR LOCATION)

DOUBLE DOOR #012
H/W #–
WxH=5'-11 3/4"x 6'-9 1/8"

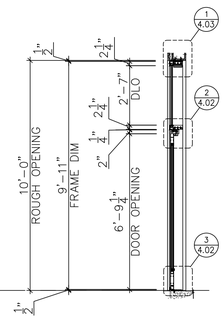

S04A OPG1900 CW SECTION
ARCH. REF. : AL-7W
SHOP. REF. : X/XX

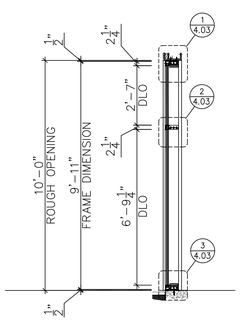

S04 OPG1900 CW SECTION
ARCH. REF. : AL-7W
SHOP. REF. : X/XX

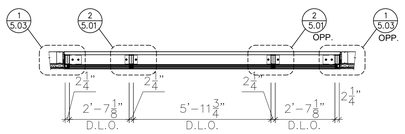

P04A OPG1900 CW PLAN
ARCH. REF. : AL-7W
SHOP. REF. : X/XX

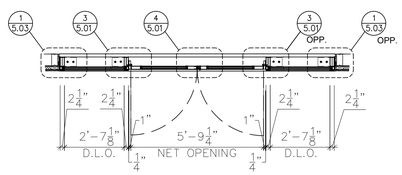

P04 OPG1900 CW PLAN
ARCH. REF. : AL-7W
SHOP. REF. : X/XX

DISTRIBUTION

FLOOR	WEST ELEVATION	QTY (SETS)
2ND	1	1
QTY TOTAL		1

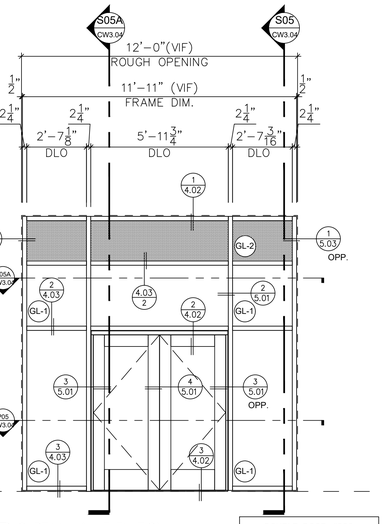

AL-8W CURTAIN WALL ELEVATION
(Ref. Arch : AL-8W/8-50)

- FRAME : 2 1/4" x 7" OPG-1900 SERIES
- GLASS : 1" GLASS
- QTY : (SEE TABLE FOR LOCATION)

DOUBLE DOOR #009
H/W #0
WxH=5'-11 3/4"x 6'-9 1/8"

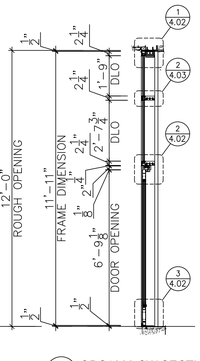

S05A OPG1900 CW SECTION
ARCH. REF. : AL-8W
SHOP. REF. : X/XX

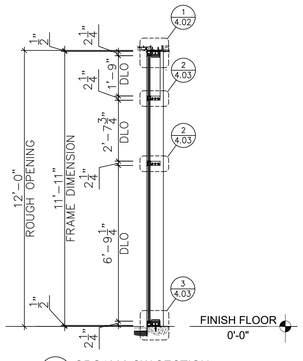

S05 OPG1900 CW SECTION
ARCH. REF. : AL-8W
SHOP. REF. : X/XX

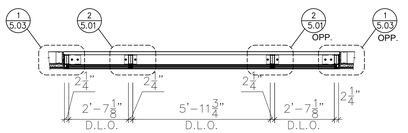

P05A OPG1900 CW PLAN
ARCH. REF. : AL-8W
SHOP. REF. : X/XX

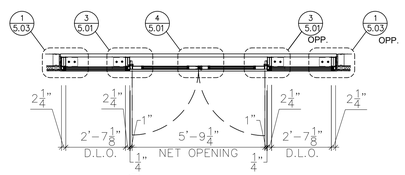

P05 OPG1900 CW PLAN
ARCH. REF. : AL-8W
SHOP. REF. : X/XX

DISTRIBUTION

FLOOR	WEST ELEVATION	QTY (SETS)
1ST	1	1
QTY TOTAL		1

IDENTIFICATION STAMP
DIV. OF THE STATE ARCHITECT
APP. 03-119458 INC:
REVIEWED FOR
SS ☑ FLS ☑ ACS ☑
DATE:05/23/2019

DIVISION OF STATE ARCHITECT
355 South Grand Avenue, Suite 2100
Los Angeles, California. 90012
ph: (213) 897-3995 Fax: (213) 897-3159
agency

tBP
architecture
planning
interiors

tBP/Architecture
4611 Teller Avenue
Newport Beach, CA 92660
ph: 949.673.0300 fx: 949.732.3895
architect

REGISTERED PROFESSIONAL ENGINEER
CRAIG M. HOGENSON
No. 84674
CIVIL
STATE OF CALIFORNIA

04/12/19

consultant

COMPTON COLLEGE
INSTRUCTIONAL BUILDING No. 2

COMPTON COMMUNITY COLLEGE DISTRICT
1111 E. ARTESIA BLVD. COMPTON, CA.

owner

tBP project number : 20998.00
file name:
drawn by: checked by:
date: 10/20/18

Rev:	date:	description:

THIS DRAWING AND THE DESIGNS, DEPICTIONS, IDEAS AND OTHER INFORMATION CONTAINED HEREIN CONSTITUTE UNPUBLISHED WORK OF tBP/ARCHITECTURE AND SHALL REMAIN THE PROPERTY OF tBP/ARCHITECTURE IN PERPETUITY. NO PART HEREOF SHALL BE REPRODUCED, DISCLOSED, DISTRIBUTED, SOLD, PUBLISHED OR OTHERWISE USED IN ANY WAY WITHOUT THE ADVANCED EXPRESS WRITTEN CONSENT OF tBP/ARCHITECTURE.

SCALE : 3/8" = 1'-0"

drawing title:
ELEVATION
OPG 1900

drawing no.:
CW3.04

drawing of

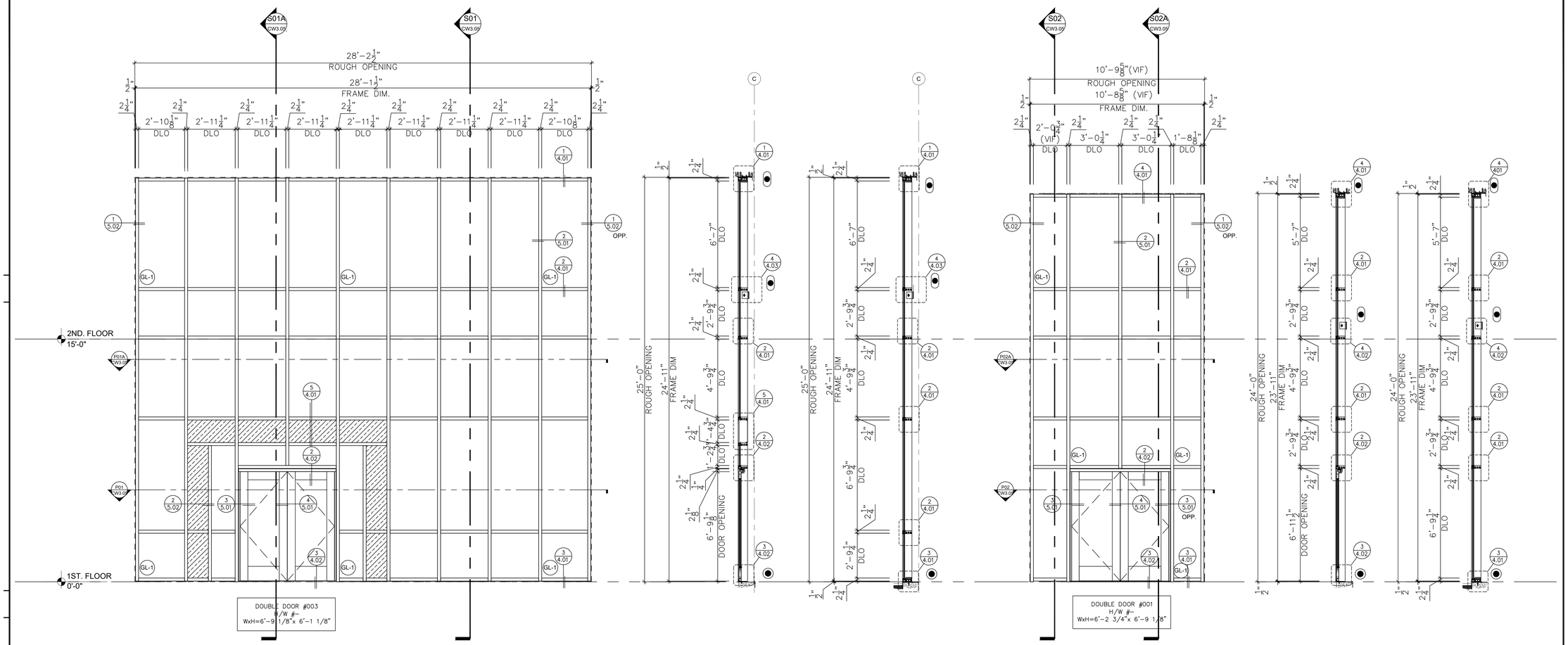

AL-5N CURTAIN WALL ELEVATION
(Ref. Arch : AL-5N/8-50)

- FRAME : 2 1/4" x 7" OPG-1900 SERIES
- GLASS : 1" GLASS
- Q'TY : (SEE TABLE FOR LOCATION)

S01A OPG1900 CW SECTION
ARCH. REF. : AL-5N
SHOP. REF. : X/XX

S01 OPG1900 CW SECTION
ARCH. REF. : AL-5N
SHOP. REF. : X/XX

AL-3S CURTAIN WALL ELEVATION
(Ref. Arch : AL-3S/8-50)

- FRAME : 2 1/4" x 7" OPG-1900 SERIES
- GLASS : 1" GLASS
- Q'TY : (SEE TABLE FOR LOCATION)

S02A OPG1900 CW SECTION
ARCH. REF. : AL-3S
SHOP. REF. : X/XX

S02 OPG1900 CW SECTION
ARCH. REF. : AL-5N
SHOP. REF. : X/XX

DISTRIBUTION

FLOOR	NORTH ELEVATION	Q'TY (SETS)
1ST to 2ND	1	1
QTY TOTAL		1

DISTRIBUTION

FLOOR	SOUTH ELEVATION	Q'TY (SETS)
1ST to 2ND	1	1
QTY TOTAL		1

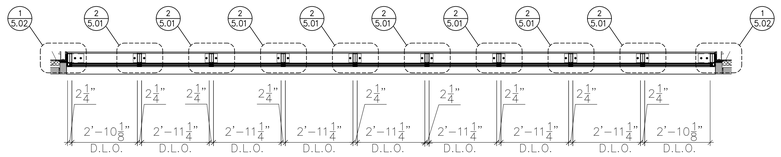

P01A OPG1900 CW PLAN
ARCH. REF. : AL-5N
SHOP. REF. : X/XX

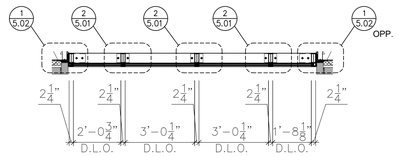

P02A OPG1900 CW PLAN
ARCH. REF. : AL-3S
SHOP. REF. : X/XX

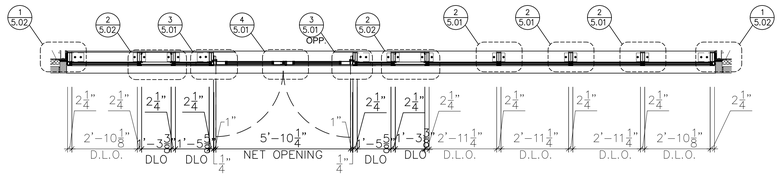

P01 OPG1900 CW PLAN
ARCH. REF. : AL-5N
SHOP. REF. : X/XX

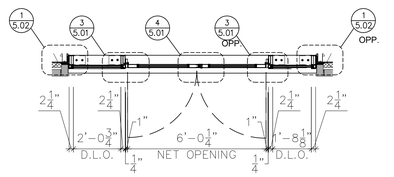

P02 OPG1900 CW PLAN
ARCH. REF. : AL-3S
SHOP. REF. : X/XX

IDENTIFICATION STAMP
DIV. OF THE STATE ARCHITECT
APP. 03-119458 INC:
REVIEWED FOR
SS ☑ FLS ☑ ACS ☑
DATE:05/23/2019

DIVISION OF STATE ARCHITECT
355 South Grand Avenue, Suite 2100
Los Angeles, California. 90012
ph: (213) 897-3995 Fax: (213) 897-3159
agency

tBP
architecture
planning
interiors

tBP/Architecture
4611 Teller Avenue
Newport Beach, CA 92660
ph: 949.673.0300 fx: 949.732.3895
architect

REGISTERED PROFESSIONAL ENGINEER
CRAIG M. HORNER
No. 84674
CIVIL
STATE OF CALIFORNIA
04/12/19

consultant

COMPTON COLLEGE INSTRUCTIONAL BUILDING No. 2

COMPTON COMMUNITY COLLEGE DISTRICT
1111 E. ARTESIA BLVD. COMPTON, CA.

owner

tBP project number : 20998.00
file name:
drawn by: checked by:
date: 10/20/18

Rev: date: description:

THIS DRAWING AND THE DESIGNS, DEPICTIONS, IDEAS AND OTHER INFORMATION CONTAINED HEREIN CONSTITUTE UNPUBLISHED WORK OF tBP/ARCHITECTURE AND SHALL REMAIN THE PROPERTY OF tBP/ARCHITECTURE IN PERPETUITY. NO PART THEREOF SHALL BE REPRODUCED, DISCLOSED, DISTRIBUTED, SOLD, PUBLISHED OR OTHERWISE USED IN ANY WAY WITHOUT THE ADVANCED EXPRESS WRITTEN CONSENT OF tBP/ARCHITECTURE.

SCALE: 3/8" = 1'-0"

drawing title:
ELEVATION
OPG1900

drawing no.:
CW3.05

drawing of

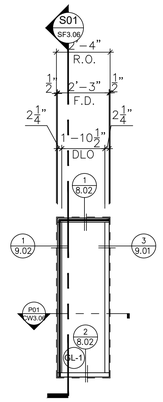

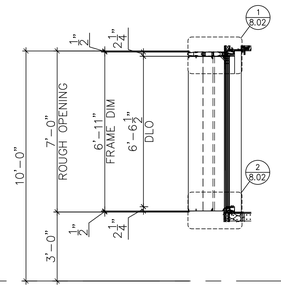

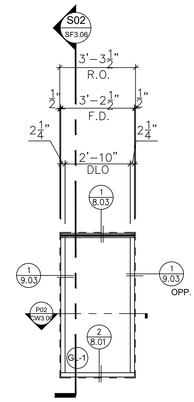

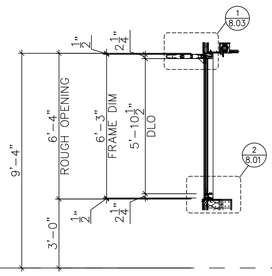

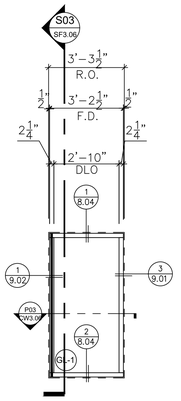

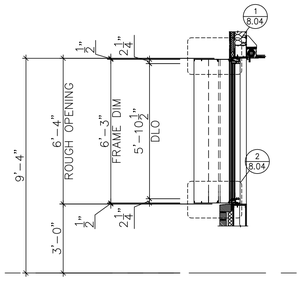

FINISH FLOOR
0'-0"

AL-2S STOREFRONT ELEV. W/ L SHAPE SUNSHADE
Ref. Arch : AL-2S/8.50

- FRAME : 2 1/4" x 5 1/2" TC 470 SERIES
- GLASS : 1" GLASS
- Q'TY : (SEE TABLE FOR LOCATION)

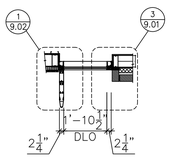

P01 TC 470 CW PLAN
ARCH. REF. : AL-2S/8.50
SHOP. REF. : X/XX

S01 TC 470 CW SECTION
ARCH. REF. : AL-2S/8.50
SHOP. REF. : X/XX

DISTRIBUTION

FLOOR	SOUTH	Q'TY (SETS)
2ND	3	3
1ST	3	3
Q'TY TOTAL		6

AL-4S STOREFRONT W/ HORIZ. SUNSHADE
Ref. Arch : AL-2S/8.50

- FRAME : 2 1/4" x 5 1/2" TC-470 SERIES W/ BSD001
- GLASS : 1" GLASS
- Q'TY : (SEE TABLE FOR LOCATION)

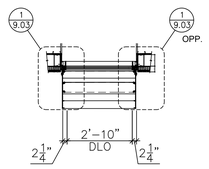

P02 TC 470 CW PLAN
ARCH. REF. : AL-2S/8.50
SHOP. REF. : X/XX

S02 TC 470 CW SECTION
ARCH. REF. : AL-2S/8.50
SHOP. REF. : X/XX

DISTRIBUTION

FLOOR	SOUTH	Q'TY (SETS)
1ST	2	2
Q'TY TOTAL		2

AL-4E STOREFRONT ELEV. W/ VERT. SUNSHADE
Ref. Arch : AL-2S/8.50

- FRAME : 2 1/4" x 5 1/2" TC-470 SERIES@ BSD009
- GLASS : 1" GLASS
- Q'TY : (SEE TABLE FOR LOCATION)

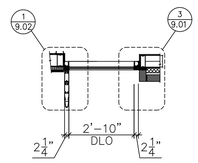

P03 TC 470 CW PLAN
ARCH. REF. : AL-2S/8.50
SHOP. REF. : X/XX

S03 TC 470 CW SECTION
ARCH. REF. : AL-2S/8.50
SHOP. REF. : X/XX

DISTRIBUTION

FLOOR	EAST	Q'TY (SETS)
1ST	7	7
Q'TY TOTAL		7

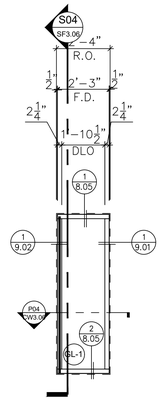

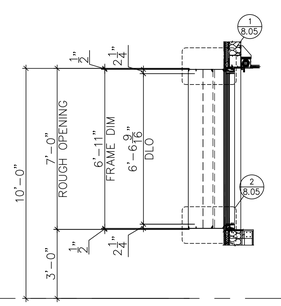

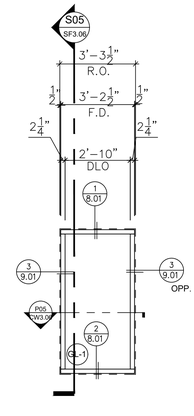

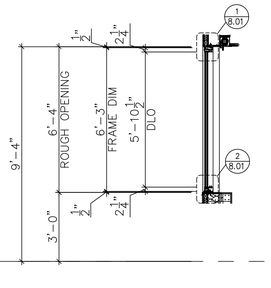

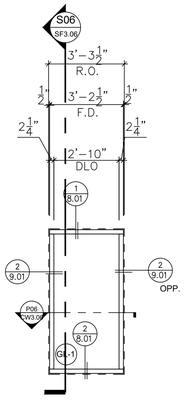

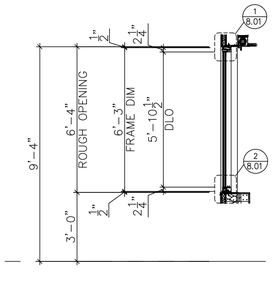

FINISH FLOOR
0'-0"

AL-2E STOREFRONT ELEV. W/ VERT. SUNSHADE
Ref. Arch : AL-2E

- FRAME : 2 1/4" x 5 1/2" TC 470 SERIES W/ BSD009
- GLASS : 1" GLASS
- Q'TY : (SEE TABLE FOR LOCATION)

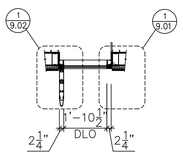

P04 TC 470 CW PLAN
ARCH. REF. : AL-2E
SHOP. REF. : X/XX

S04 TC 470 CW SECTION
ARCH. REF. : AL-2E
SHOP. REF. : X/XX

DISTRIBUTION

FLOOR	EAST	Q'TY (SETS)
2ND	3	3
1ST	3	3
Q'TY TOTAL		6

AL-4W STOREFRONT ELEVATION
Ref. Arch : AL-4W

- FRAME : 2 1/4" x 5 1/2" TC-470 SERIES
- GLASS : 1" GLASS
- Q'TY : (SEE TABLE FOR LOCATION)

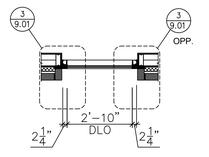

P05 TC 470 CW PLAN
ARCH. REF. : AL-4W
SHOP. REF. : X/XX

S05 TC 470 CW SECTION
ARCH. REF. : AL-4W
SHOP. REF. : X/XX

DISTRIBUTION

FLOOR	WEST	Q'TY (SETS)
2ND	1	1
1ST	3	3
Q'TY TOTAL		4

AL-4N STOREFRONT ELEVATION
Ref. Arch : AL-4N

- FRAME : 2 1/4" x 5 1/2" TC-470 SERIES
- GLASS : 1" GLASS
- Q'TY : (SEE TABLE FOR LOCATION)

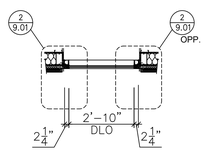

P06 TC 470 CW PLAN
ARCH. REF. : AL-4N
SHOP. REF. : X/XX

S06 TC 470 CW SECTION
ARCH. REF. : AL-4N
SHOP. REF. : X/XX

DISTRIBUTION

FLOOR	NORTH	Q'TY (SETS)
2ND	2	2
Q'TY TOTAL		2

IDENTIFICATION STAMP
DIV. OF THE STATE ARCHITECT
APP. 03-119458 INC:
REVIEWED FOR
SS ☑ FLS ☑ ACS ☑
DATE:05/23/2019

DIVISION OF STATE ARCHITECT
355 South Grand Avenue, Suite 2100
Los Angeles, California. 90012
ph: (213) 897-3995 Fax: (213) 897-3159
agency

tBP architecture planning interiors

tBP/Architecture
4611 Teller Avenue
Newport Beach, CA 92660
ph: 949.673.0300 fx: 949.732.3895
architect

REGISTERED PROFESSIONAL ENGINEER
CRAIG M. HOSMER
No. 84674
CIVIL
STATE OF CALIFORNIA
04/12/19

consultant

COMPTON COLLEGE
INSTRUCTIONAL BUILDING No. 2

COMPTON COMMUNITY COLLEGE DISTRICT
1111 E. ARTESIA BLVD. COMPTON, CA.

owner

tBP project number : 20998.00
file name:
drawn by: checked by:
date: 10/20/18

Rev:	date:	description:

THIS DRAWING AND THE DESIGNS, DEPICTIONS, IDEAS AND OTHER INFORMATION CONTAINED HEREIN CONSTITUTE UNPUBLISHED WORK OF tBP/ARCHITECTURE AND SHALL REMAIN THE PROPERTY OF tBP/ARCHITECTURE IN PERPETUITY. NO PART THEREOF SHALL BE REPRODUCED, DISCLOSED, DISTRIBUTED, SOLD, PUBLISHED OR OTHERWISE USED IN ANY WAY WITHOUT THE ADVANCED EXPRESS WRITTEN CONSENT OF tBP/ARCHITECTURE.

SCALE: 3/8" = 1'-0"

drawing title:
ELEVATION
TC 470

drawing no.:
CW3.06

drawing of

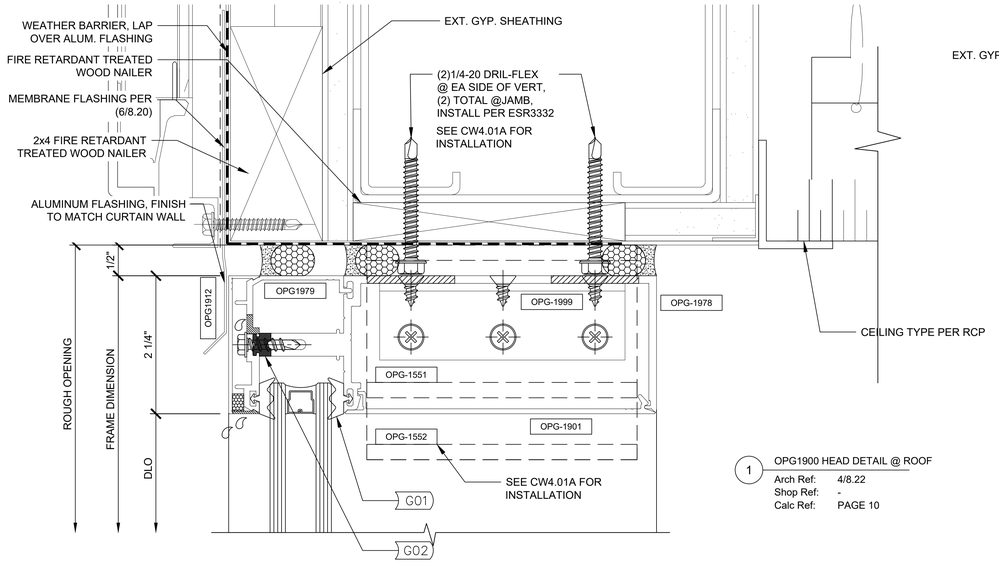

1 OPG1900 HEAD DETAIL @ ROOF
Arch Ref: 4/8.22
Shop Ref: -
Calc Ref: PAGE 10

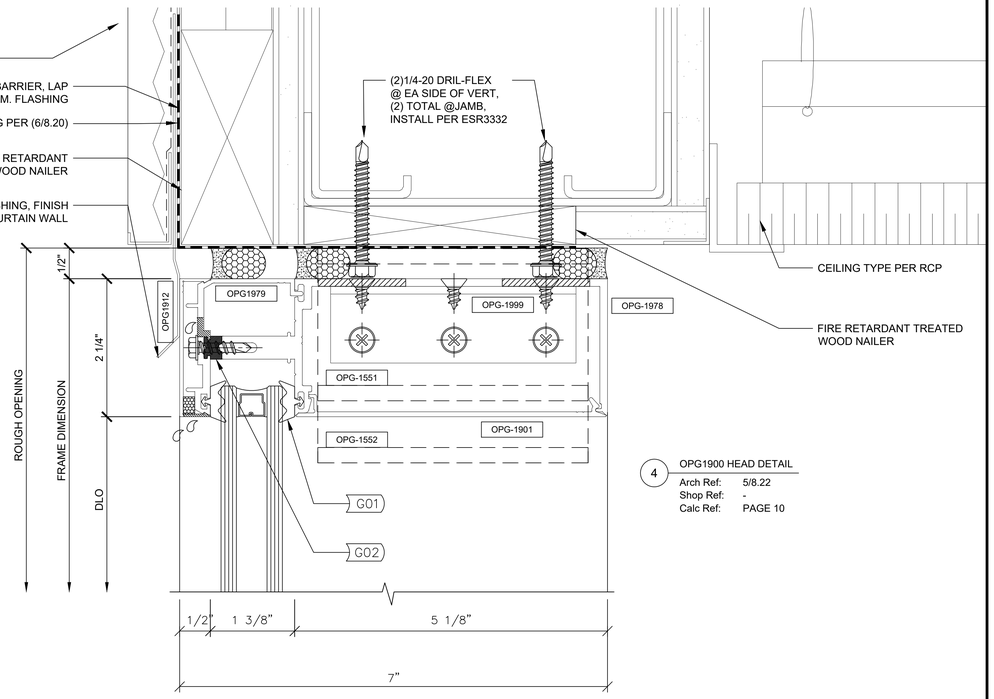

4 OPG1900 HEAD DETAIL
Arch Ref: 5/8.22
Shop Ref: -
Calc Ref: PAGE 10

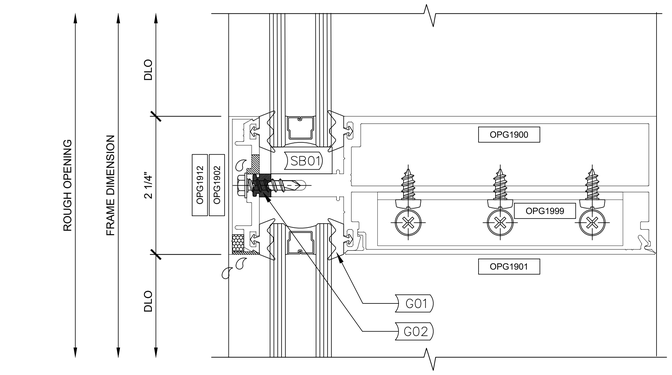

2 OPG1900 HORIZONTAL, TYP.
Arch Ref: (B) HORIZONTAL 10/8.22
Shop Ref: -
Calc Ref: -

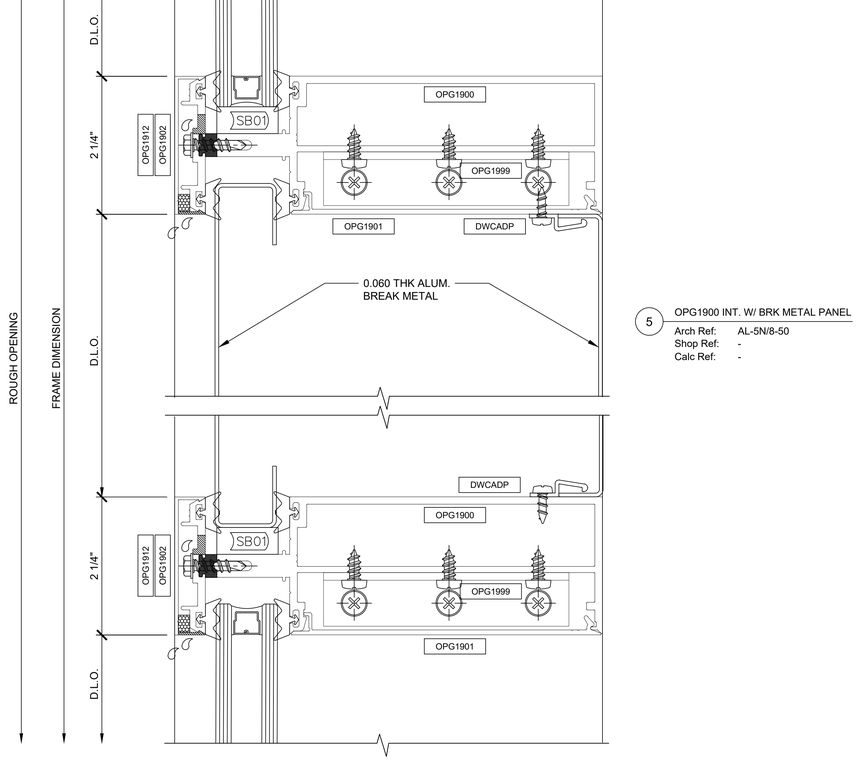

5 OPG1900 INT. W/ BRK METAL PANEL
Arch Ref: AL-5N/8-50
Shop Ref: -
Calc Ref: -

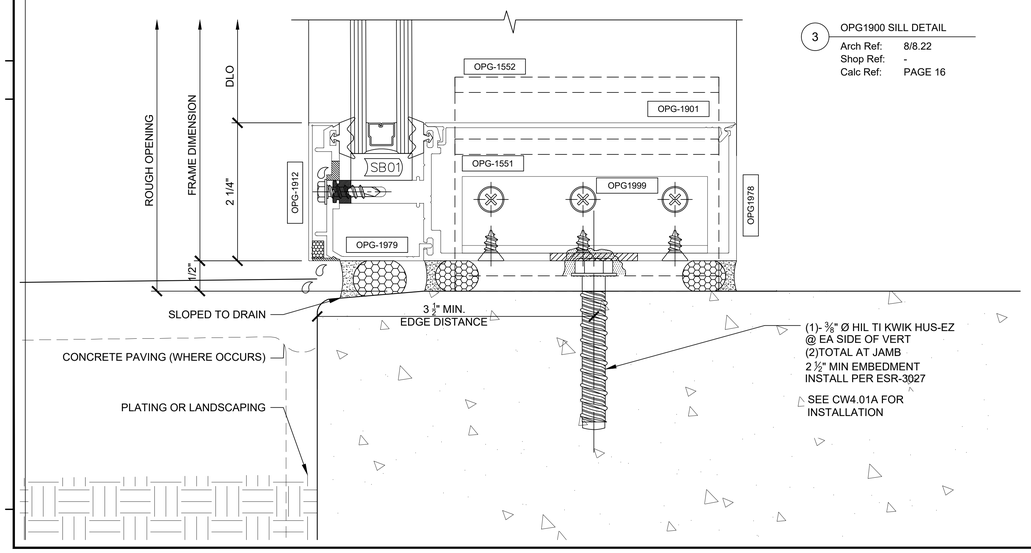

3 OPG1900 SILL DETAIL
Arch Ref: 8/8.22
Shop Ref: -
Calc Ref: PAGE 16

IDENTIFICATION STAMP
DIV. OF THE STATE ARCHITECT
APP. 03-119458 INC:
REVIEWED FOR
SS ☑ FLS ☑ ACS ☑
DATE:05/23/2019

DIVISION OF STATE ARCHITECT
355 South Grand Avenue, Suite 2100
Los Angeles, California. 90012
ph: (213) 897-3995 Fax: (213) 897-3159
agency

tBP
architecture
planning
interiors

tBP/Architecture
4611 Teller Avenue
Newport Beach, CA 92660
ph: 949.673.0300 fx: 949.732.3895
architect

REGISTERED PROFESSIONAL ENGINEER
CRAIG M. ROHNER
No. 84674
CIVIL
STATE OF CALIFORNIA
04/12/19

consultant

COMPTON COLLEGE
INSTRUCTIONAL BUILDING No. 2

COMPTON COMMUNITY COLLEGE DISTRICT
1111 E. ARTESIA BLVD. COMPTON, CA.

owner

tBP project number : 20998.00
file name:
drawn by: checked by:
date: 10/20/18

Rev:	date:	description:

THIS DRAWING AND THE DESIGNS, DEPICTIONS, IDEAS AND OTHER INFORMATION CONTAINED HEREIN CONSTITUTE UNPUBLISHED WORK OF tBP/ARCHITECTURE AND SHALL REMAIN THE PROPERTY OF tBP/ARCHITECTURE IN PERPETUITY. NO PART THEREOF SHALL BE REPRODUCED, DISCLOSED, DISTRIBUTED, SOLD, PUBLISHED OR OTHERWISE USED IN ANY WAY WITHOUT THE ADVANCED EXPRESS WRITTEN CONSENT OF tBP/ARCHITECTURE.

drawing title:
HORIZONTAL DETAILS (OPG-1900)

drawing no.:
CW4.01
drawing of

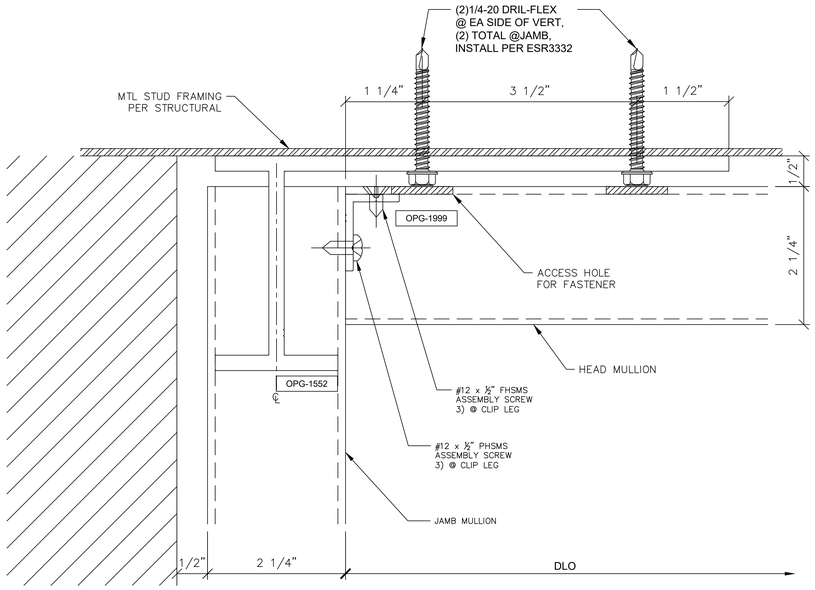

1 JAMB "F" CLIP DETAIL @ HEAD

Arch Ref: -
Shop Ref: -
Calc Ref: -

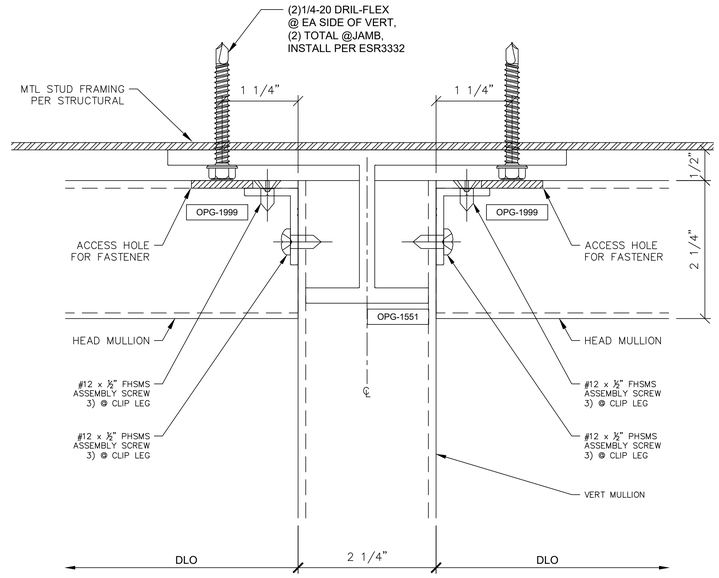

2 INT VERT "T" CLIP DETAIL @ HEAD

Arch Ref: -
Shop Ref: -
Calc Ref: -

3 JAMB "F" CLIP DETAIL @ SILL

Arch Ref: -
Shop Ref: -
Calc Ref: -

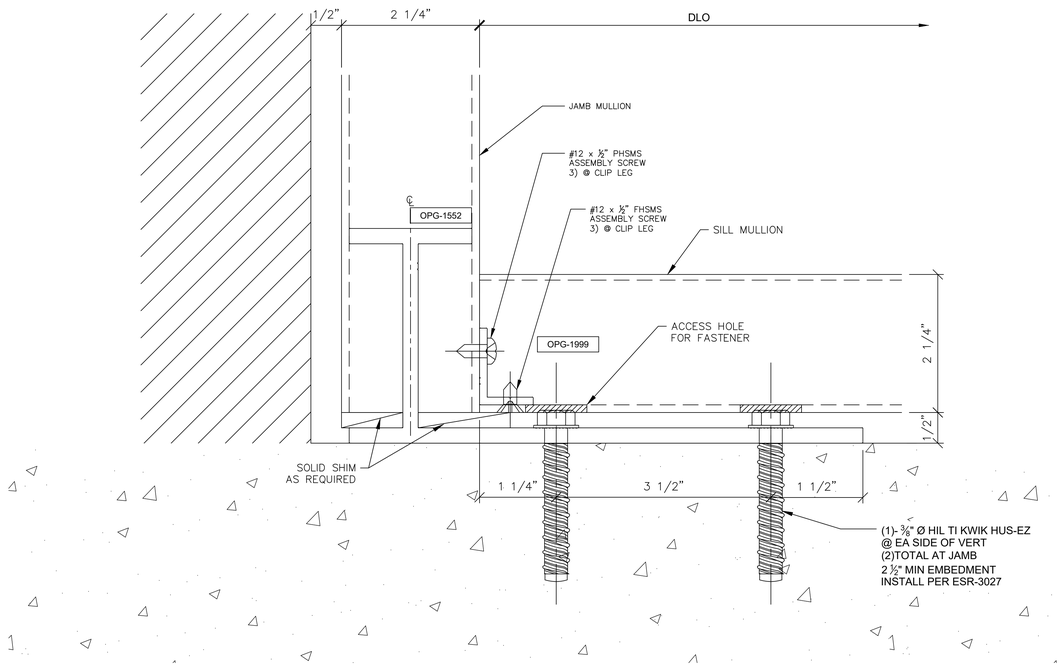

4 INT VERT "T" CLIP DETAIL @ SILL

Arch Ref: -
Shop Ref: -
Calc Ref: -

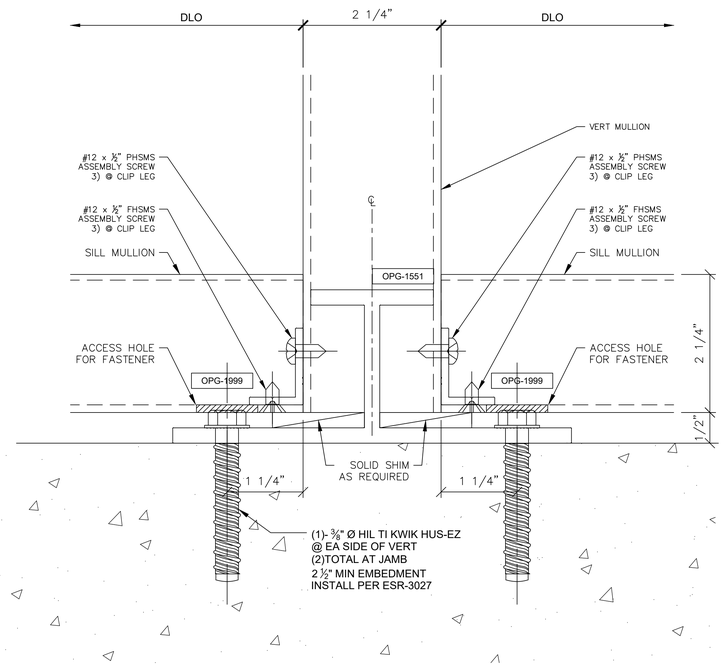

IDENTIFICATION STAMP
DIV. OF THE STATE ARCHITECT
APP. 03-119458 INC:
REVIEWED FOR
SS ☑ FLS ☑ ACS ☑
DATE:05/23/2019

DIVISION OF STATE ARCHITECT
355 South Grand Avenue, Suite 2100
Los Angeles, California. 90012
ph: (213) 897-3995 Fax: (213) 897-3159
agency

tBP
architecture
planning
interiors

tBP/Architecture
4611 Teller Avenue
Newport Beach, CA 92660
ph: 949.673.0300 fx: 949.732.3895
architect

REGISTERED PROFESSIONAL ENGINEER
CRAIG M. HOFFMAN
No. 84674
CIVIL
STATE OF CALIFORNIA
04/12/19
consultant

COMPTON COLLEGE
INSTRUCTIONAL BUILDING No. 2

COMPTON COMMUNITY COLLEGE DISTRICT
1111 E. ARTESIA BLVD. COMPTON, CA.

owner

tBP project number : 20998.00
file name:
drawn by: checked by:
date: 10/20/18

Rev:	date:	description:

THIS DRAWING AND THE DESIGNS, DEPICTIONS, IDEAS AND OTHER INFORMATION CONTAINED HEREIN CONSTITUTE UNPUBLISHED WORK OF tBP/ARCHITECTURE AND SHALL REMAIN THE PROPERTY OF tBP/ARCHITECTURE IN PERPETUITY. NO PART THEREOF SHALL BE REPRODUCED, DISCLOSED, DISTRIBUTED, SOLD, PUBLISHED OR OTHERWISE USED IN ANY WAY WITHOUT THE ADVANCED EXPRESS WRITTEN CONSENT OF tBP/ARCHITECTURE.

drawing title:
HORIZONTAL DETAILS
(OPG-1900)

drawing no.:
CW4.01A
drawing of

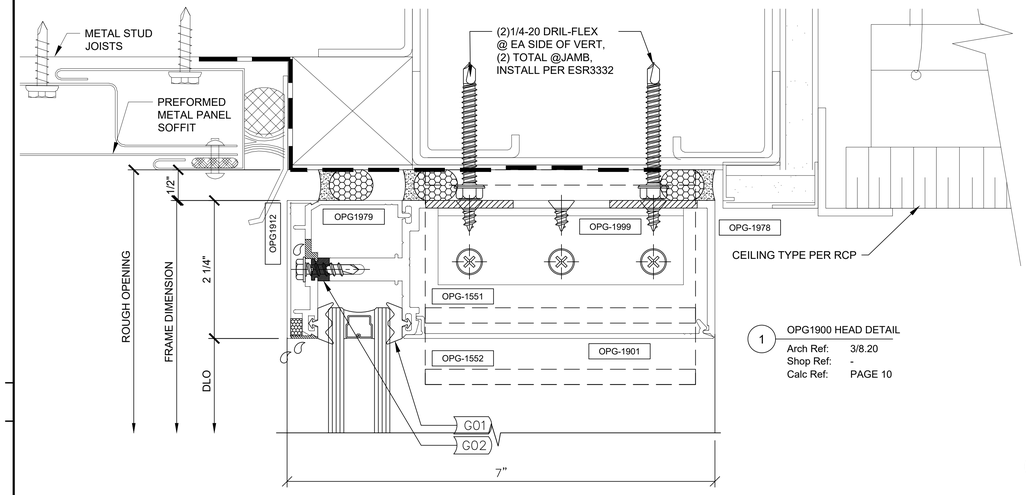

1 OPG1900 HEAD DETAIL
Arch Ref: 3/8.20
Shop Ref: -
Calc Ref: PAGE 10

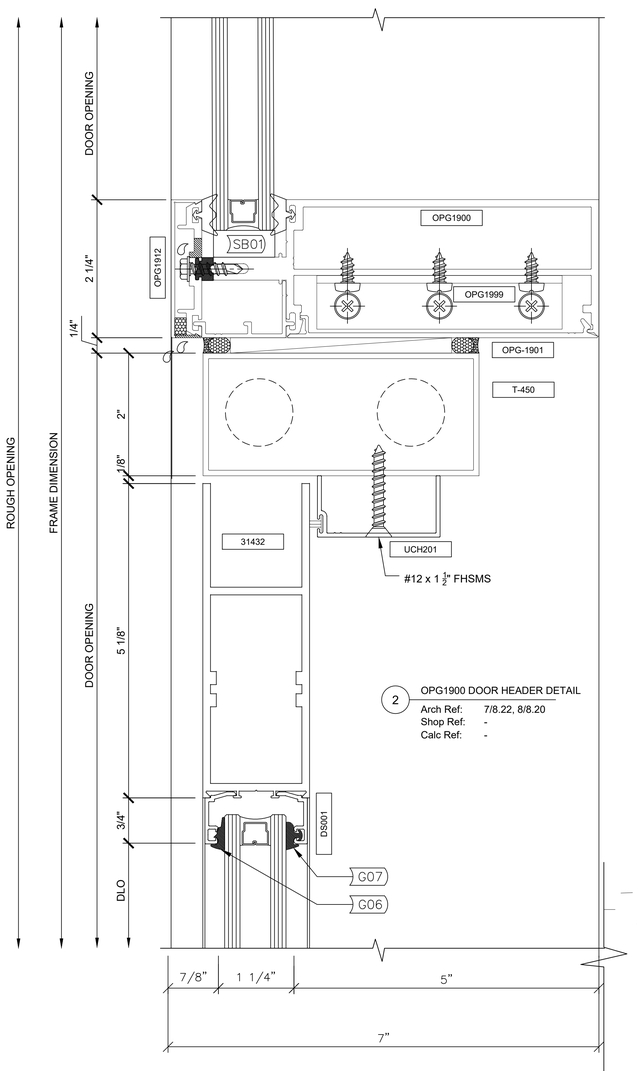

2 OPG1900 DOOR HEADER DETAIL
Arch Ref: 7/8.22, 8/8.20
Shop Ref: -
Calc Ref: -

3 OPG1900 10" BOTTOM RAIL DETAIL
Arch Ref: 7/8.22
Shop Ref: -
Calc Ref: -

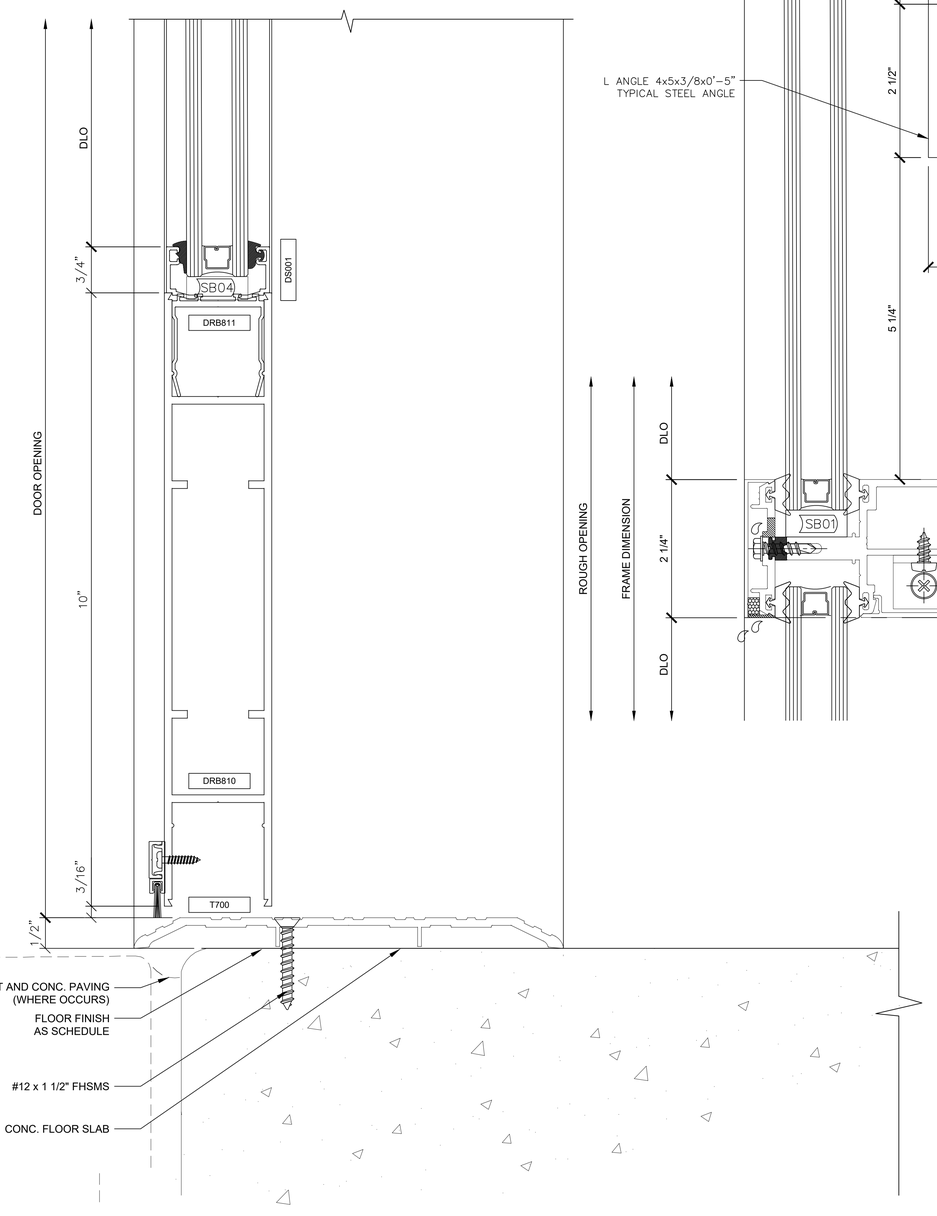

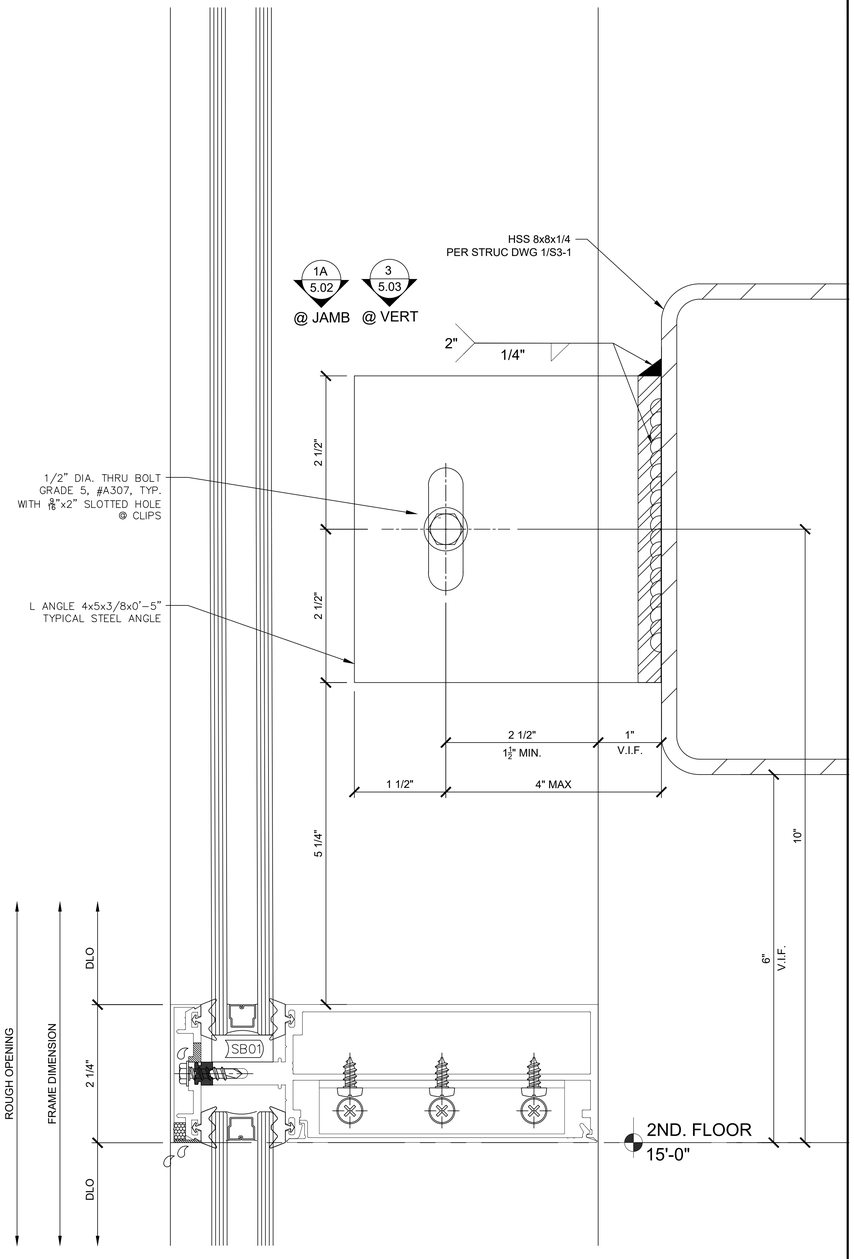

4 OPG1900 WIND LOAD CLIP
Arch Ref: 1C/A8-1, 5/S5-0.2 SIM
Shop Ref: CW3.05
Calc Ref: -

IDENTIFICATION STAMP
DIV. OF THE STATE ARCHITECT
APP. 03-119458 INC:
REVIEWED FOR
SS ☑ FLS ☑ ACS ☑
DATE:05/23/2019

DIVISION OF STATE ARCHITECT
355 South Grand Avenue, Suite 2100
Los Angeles, California. 90012
ph: (213) 897-3995 Fax: (213) 897-3159
agency

tBP
architecture
planning
interiors

tBP/Architecture
4611 Teller Avenue
Newport Beach, CA 92660
ph: 949.673.0300 fx: 949.732.3895
architect

REGISTERED PROFESSIONAL ENGINEER
CRAIG M. HOHBACH
No. 84674
CIVIL
STATE OF CALIFORNIA
04/12/19
consultant

COMPTON COLLEGE
INSTRUCTIONAL BUILDING No. 2

COMPTON COMMUNITY COLLEGE DISTRICT
1111 E. ARTESIA BLVD. COMPTON, CA.

owner

tBP project number : 20998.00
file name:
drawn by: checked by:
date: 10/20/18

Rev:	date:	description:

THIS DRAWING AND THE DESIGNS, DEPICTIONS, IDEAS AND OTHER INFORMATION CONTAINED HEREIN CONSTITUTE UNPUBLISHED WORK OF tBP/ARCHITECTURE AND SHALL REMAIN THE PROPERTY OF tBP/ARCHITECTURE IN PERPETUITY. NO PART THEREOF SHALL BE REPRODUCED, DISCLOSED, DISTRIBUTED, SOLD, PUBLISHED OR OTHERWISE USED IN ANY WAY WITHOUT THE ADVANCED EXPRESS WRITTEN CONSENT OF tBP/ARCHITECTURE.

drawing title:
HORIZONTAL DETAILS (OPG-1900)

drawing no.:
CW4.02
drawing of

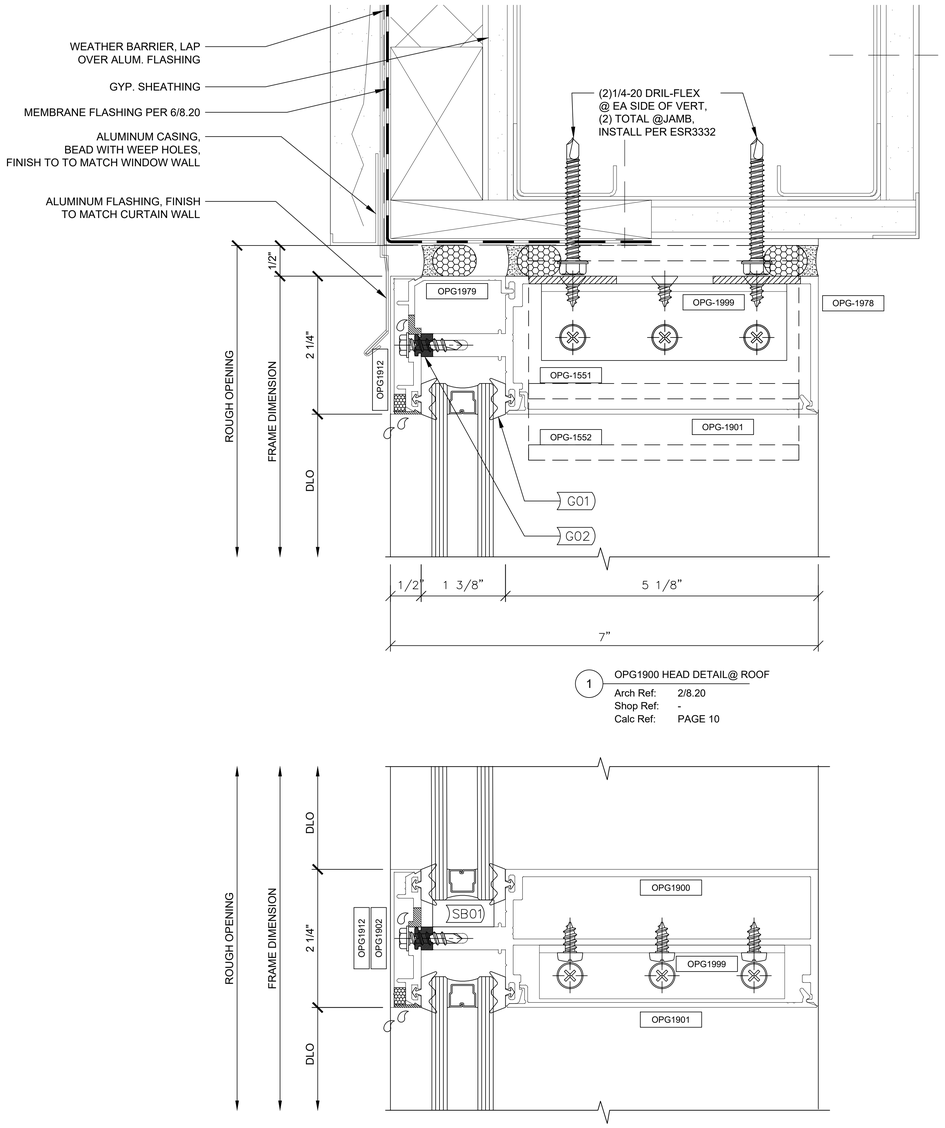

1 OPG1900 HEAD DETAIL@ ROOF

Arch Ref: 2/8.20
Shop Ref: -
Calc Ref: PAGE 10

2 OPG1900 HORIZONTAL, TYP.

Arch Ref: 9/8.20 SIM.
Shop Ref: -
Calc Ref: -

4 OPG1900 WIND LOAD CLIP

Arch Ref: 1C/A8-1, 5/S5-0.2 SIM
Shop Ref: CW3.05
Calc Ref: -

3 OPG1900 DETAIL @SILL

Arch Ref: 20/8.20
Shop Ref: -
Calc Ref: PAGE 16

IDENTIFICATION STAMP
DIV. OF THE STATE ARCHITECT
APP. 03-119458 INC:
REVIEWED FOR
SS ☑ FLS ☑ ACS ☑
DATE:05/23/2019

DIVISION OF STATE ARCHITECT
355 South Grand Avenue, Suite 2100
Los Angeles, California. 90012
ph: (213) 897-3995 Fax: (213) 897-3159
agency

tBP
architecture
planning
interiors

tBP/Architecture
4611 Teller Avenue
Newport Beach, CA 92660
ph: 949.673.0300 fx: 949.732.3895
architect

REGISTERED PROFESSIONAL ENGINEER CRAIG M. ROHNER No. 84674 CIVIL STATE OF CALIFORNIA
04/12/19
consultant

COMPTON COLLEGE
INSTRUCTIONAL BUILDING No. 2

COMPTON COMMUNITY COLLEGE DISTRICT
1111 E. ARTESIA BLVD. COMPTON, CA.

owner

tBP project number : 20998.00
file name:
drawn by: checked by:
date: 10/20/18

Rev:	date:	description:

THIS DRAWING AND THE DESIGNS, DEPICTIONS, IDEAS AND OTHER INFORMATION CONTAINED HEREIN CONSTITUTE UNPUBLISHED WORK BY tBP/ARCHITECTURE AND SHALL REMAIN THE PROPERTY OF tBP/ARCHITECTURE IN PERPETUITY. NO PART THEREOF SHALL BE REPRODUCED, DISCLOSED, DISTRIBUTED, SOLD, PUBLISHED OR OTHERWISE USED IN ANY WAY WITHOUT THE ADVANCED EXPRESS WRITTEN CONSENT OF tBP/ARCHITECTURE.

drawing title:
HORIZONTAL DETAILS (OPG-1900)

drawing no.:
CW4.03
drawing of

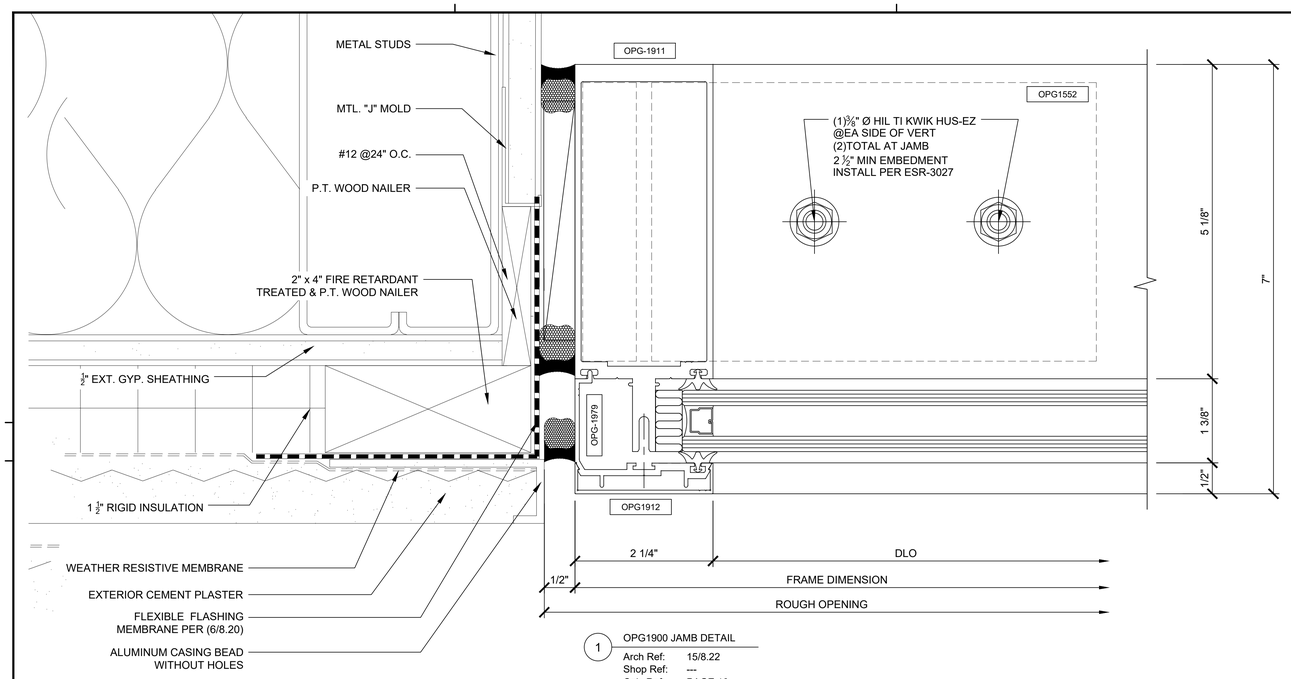

1 OPG1900 JAMB DETAIL

Arch Ref: 15/8.22
Shop Ref: ---
Calc Ref: PAGE 16

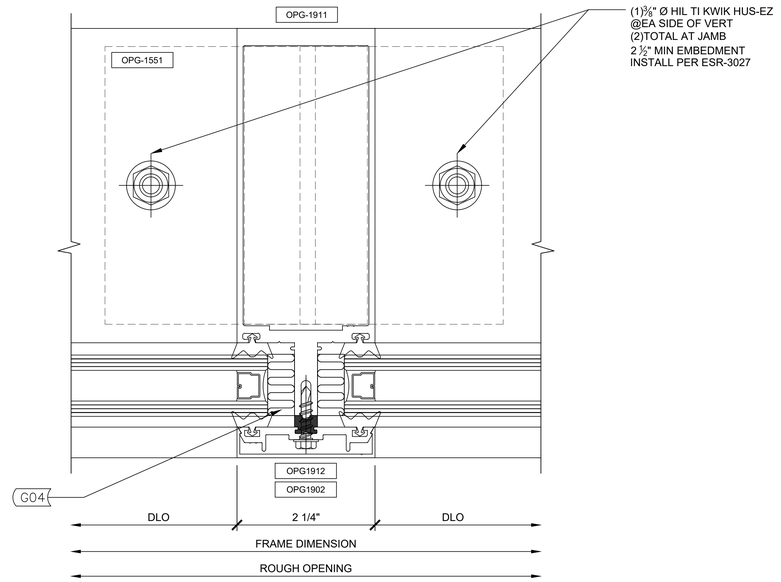

2 OPG1900 VERTICAL

Arch Ref: SIM. (A)10/8.22 & 9/8.20
Shop Ref: -
Calc Ref: -

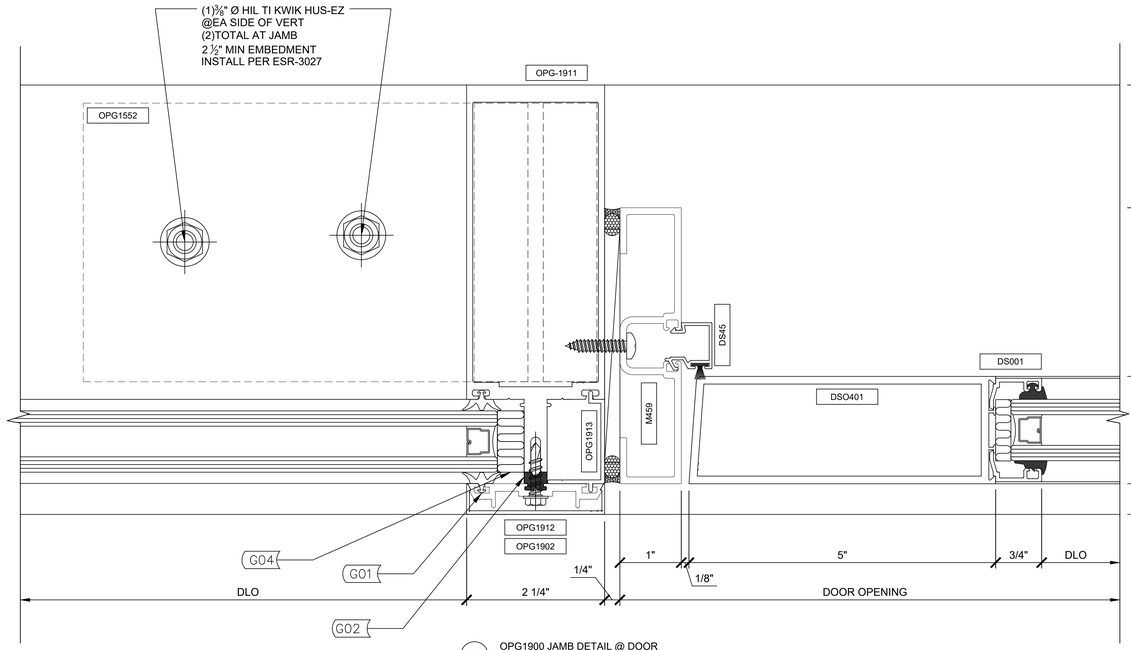

3 OPG1900 JAMB DETAIL @ DOOR

Arch Ref: 7/8.20 & 12/8.22 SIM.
Shop Ref: -
Calc Ref: PAGE 16

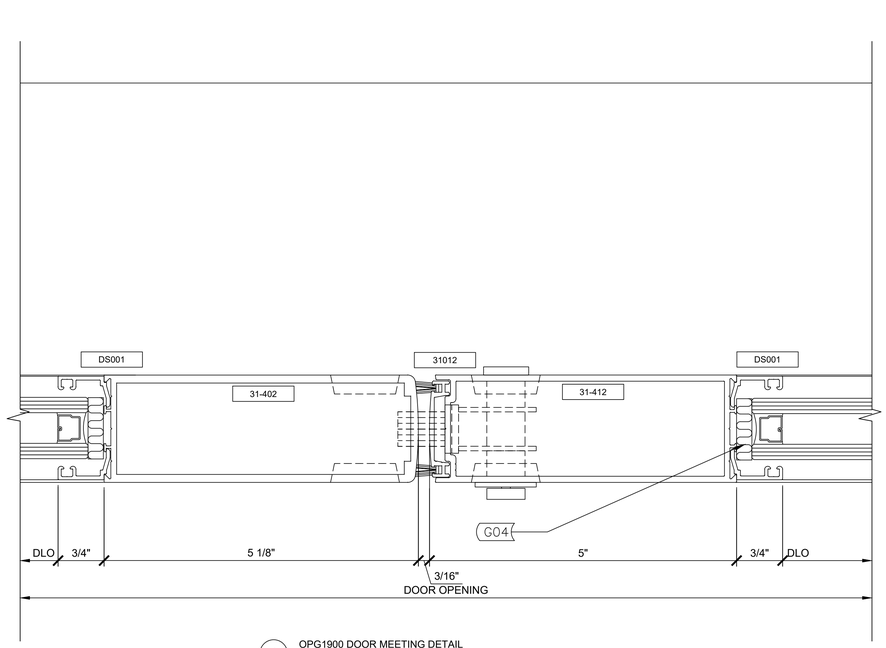

4 OPG1900 DOOR MEETING DETAIL

Arch Ref: -
Shop Ref: -
Calc Ref: -

IDENTIFICATION STAMP
DIV. OF THE STATE ARCHITECT
APP. 03-119458 INC:
REVIEWED FOR
SS ☑ FLS ☑ ACS ☑
DATE:05/23/2019

DIVISION OF STATE ARCHITECT
355 South Grand Avenue, Suite 2100
Los Angeles, California. 90012
ph: (213) 897-3995 Fax: (213) 897-3159
agency

tBP architecture planning interiors

tBP/Architecture
4611 Teller Avenue
Newport Beach, CA 92660
ph: 949.673.0300 fx: 949.732.3895
architect

REGISTERED PROFESSIONAL ENGINEER CRAIG M. HORNER No. 84674 CIVIL STATE OF CALIFORNIA
04/12/19
consultant

COMPTON COLLEGE
INSTRUCTIONAL BUILDING No. 2

COMPTON COMMUNITY COLLEGE DISTRICT
1111 E. ARTESIA BLVD. COMPTON, CA.

owner

tBP project number : 20998.00
file name:
drawn by: checked by:
date: 10/20/18

Rev: date: description:

THIS DRAWING AND THE DESIGNS, DEPICTIONS, IDEAS AND OTHER INFORMATION CONTAINED HEREIN CONSTITUTE UNPUBLISHED WORK OF tBP/ARCHITECTURE AND SHALL REMAIN THE PROPERTY OF tBP/ARCHITECTURE IN PERPETUITY. NO PART THEREOF SHALL BE REPRODUCED, DISCLOSED, DISTRIBUTED, SOLD, PUBLISHED OR OTHERWISE USED IN ANY WAY WITHOUT THE ADVANCED EXPRESS WRITTEN CONSENT OF tBP/ARCHITECTURE.

drawing title:
VERTICAL DETAILS
(OPG-1900)

drawing no.:
CW5.01

drawing of

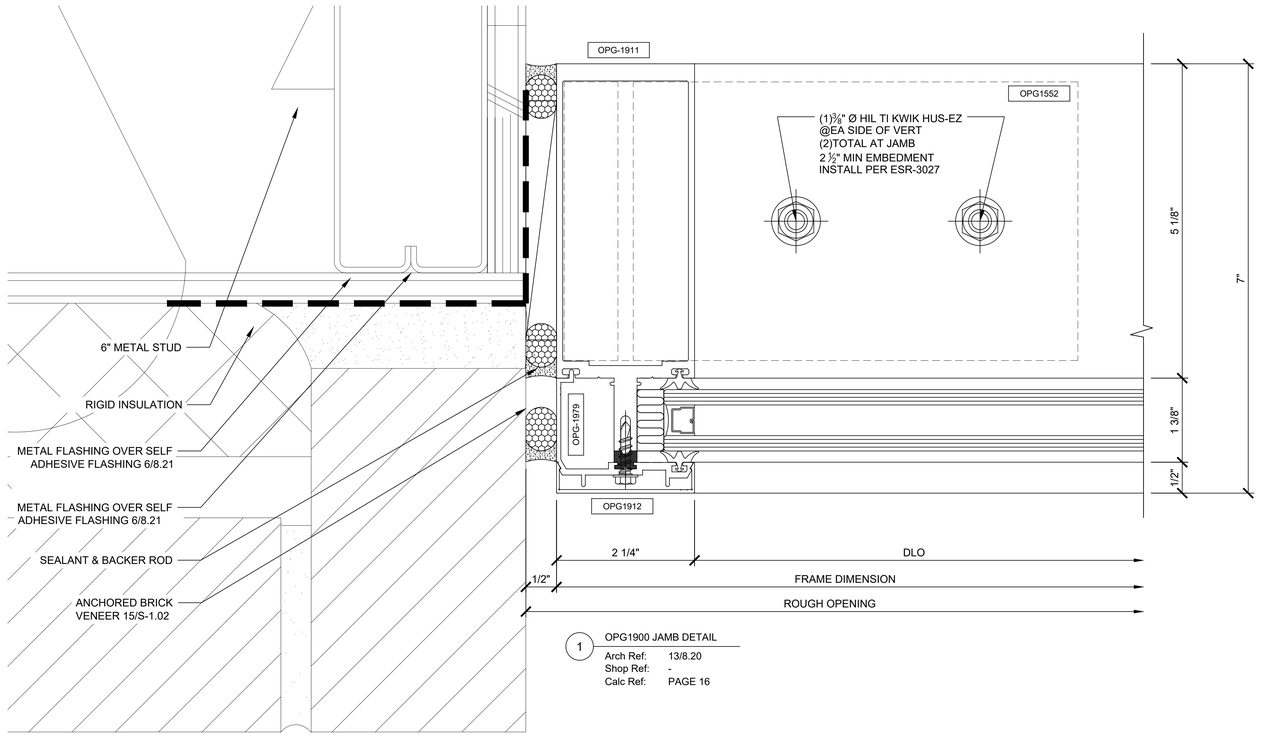

1 OPG1900 JAMB DETAIL

Arch Ref: 13/8.20
Shop Ref: -
Calc Ref: PAGE 16

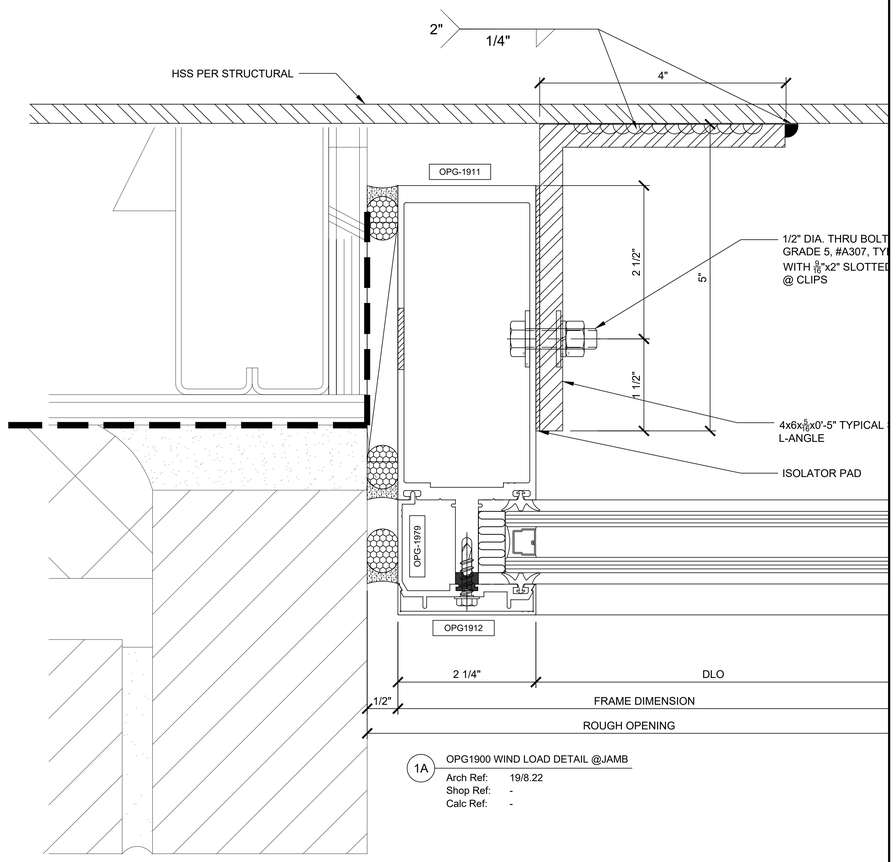

1A OPG1900 WIND LOAD DETAIL @JAMB

Arch Ref: 19/8.22
Shop Ref: -
Calc Ref: -

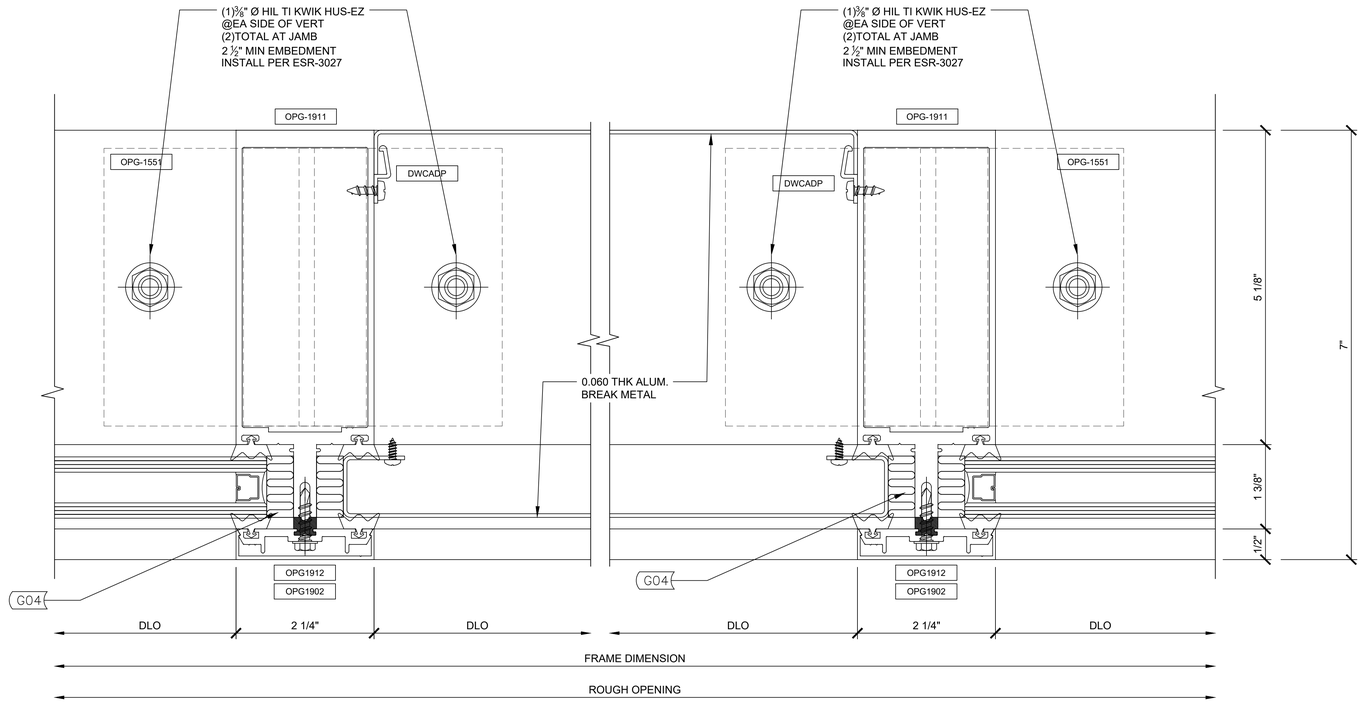

2 OPG1900 INT. W/ BRK METAL PANEL

Arch Ref: -
Shop Ref: -
Calc Ref: PAGE 16

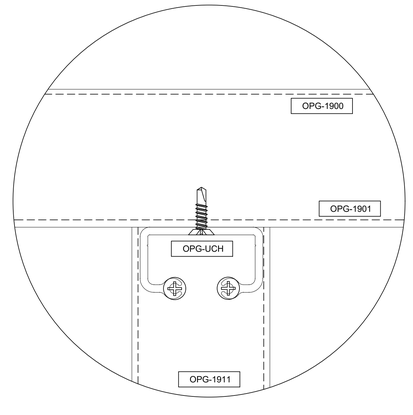

3 OPG1900 CLIP @ HORIZTONAL

Arch Ref: -
Shop Ref: -
Calc Ref: -

IDENTIFICATION STAMP
DIV. OF THE STATE ARCHITECT
APP. 03-119458 INC:
REVIEWED FOR
SS ☑ FLS ☑ ACS ☑
DATE:05/23/2019

DIVISION OF STATE ARCHITECT
355 South Grand Avenue, Suite 2100
Los Angeles, California. 90012
ph: (213) 897-3995 Fax: (213) 897-3159
agency

tBP
architecture
planning
interiors

tBP/Architecture
4611 Teller Avenue
Newport Beach, CA 92660
ph: 949.673.0300 fx: 949.732.3895
architect

REGISTERED PROFESSIONAL ENGINEER
CRAIG M. HORNER
No. 84674
CIVIL
STATE OF CALIFORNIA
04/12/19
consultant

COMPTON COLLEGE
INSTRUCTIONAL BUILDING No. 2

COMPTON COMMUNITY COLLEGE DISTRICT
1111 E. ARTESIA BLVD. COMPTON, CA.

owner

tBP project number : 20998.00
file name:
drawn by: checked by:
date: 10/20/18

Rev:	date:	description:

THIS DRAWING AND THE DESIGNS, DEPICTIONS, IDEAS AND OTHER INFORMATION CONTAINED HEREIN CONSTITUTE UNPUBLISHED WORK OF tBP/ARCHITECTURE AND SHALL REMAIN THE PROPERTY OF tBP/ARCHITECTURE IN PERPETUITY. NO PART THEREOF SHALL BE REPRODUCED, DISCLOSED, DISTRIBUTED, SOLD, PUBLISHED OR OTHERWISE USED IN ANY WAY WITHOUT THE ADVANCED EXPRESS WRITTEN CONSENT OF tBP/ARCHITECTURE.

drawing title:
VERTICAL DETAILS
(OPG-1900)

drawing no.:
CW5.02
drawing of

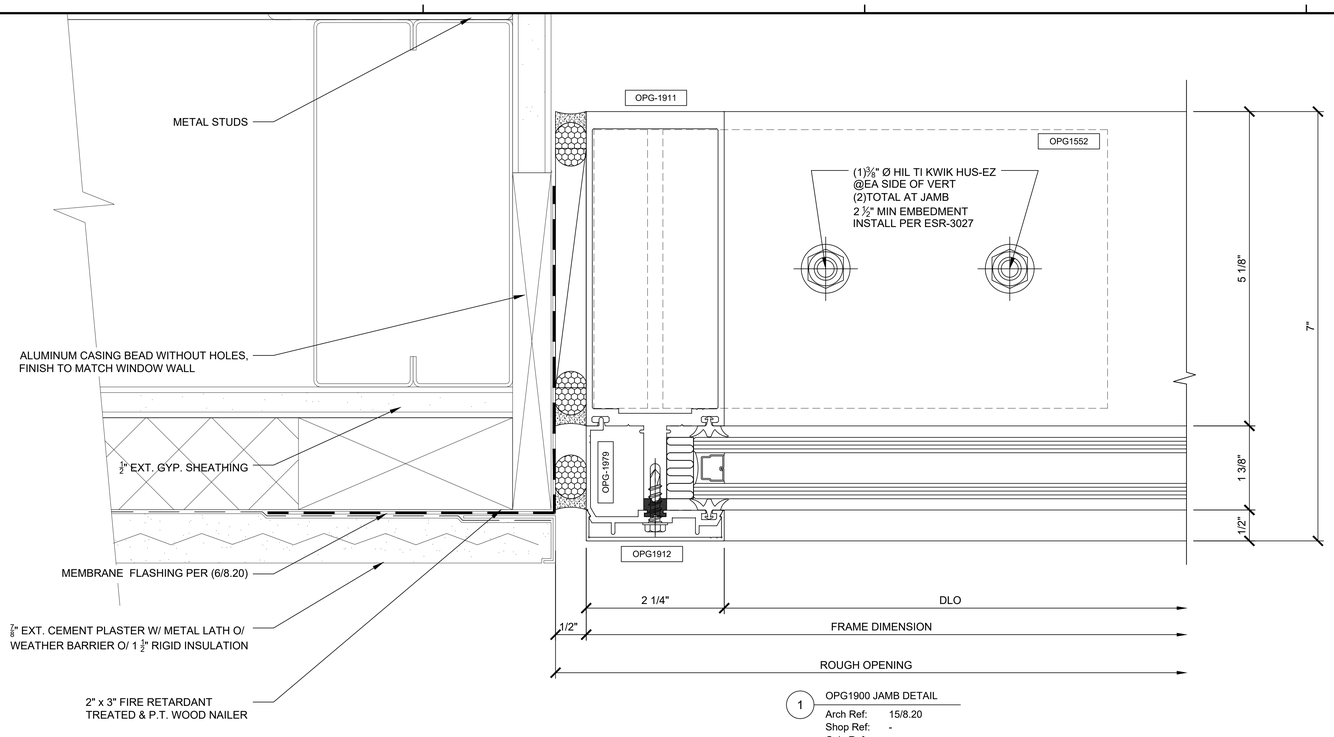

1 OPG1900 JAMB DETAIL

Arch Ref: 15/8.20
Shop Ref: -
Calc Ref: -

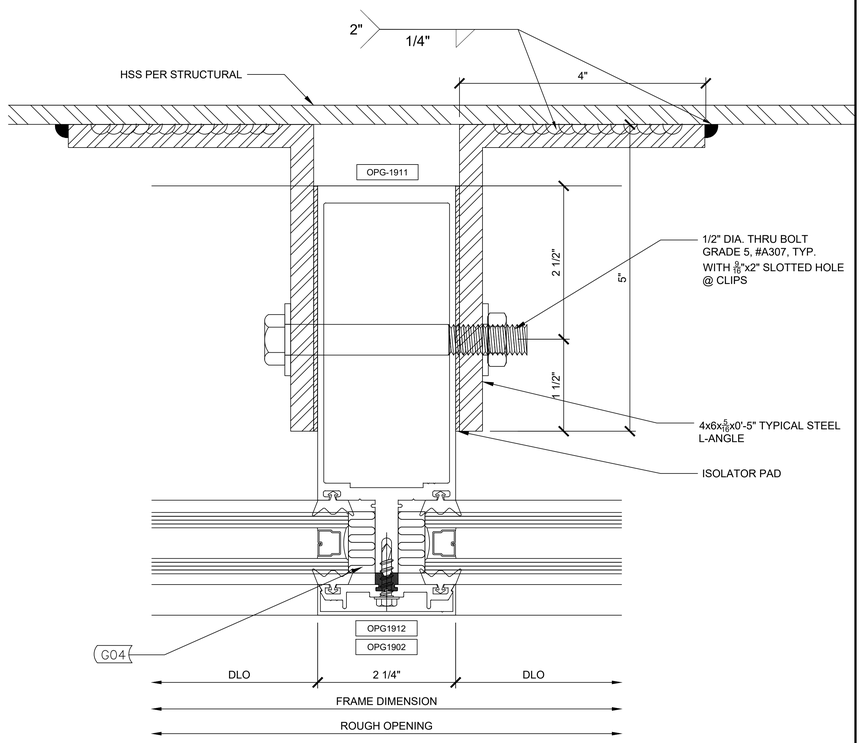

3 OPG1900 WIND LOAD DETAIL @ VERT

Arch Ref: 19/8.22
Shop Ref: -
Calc Ref: -

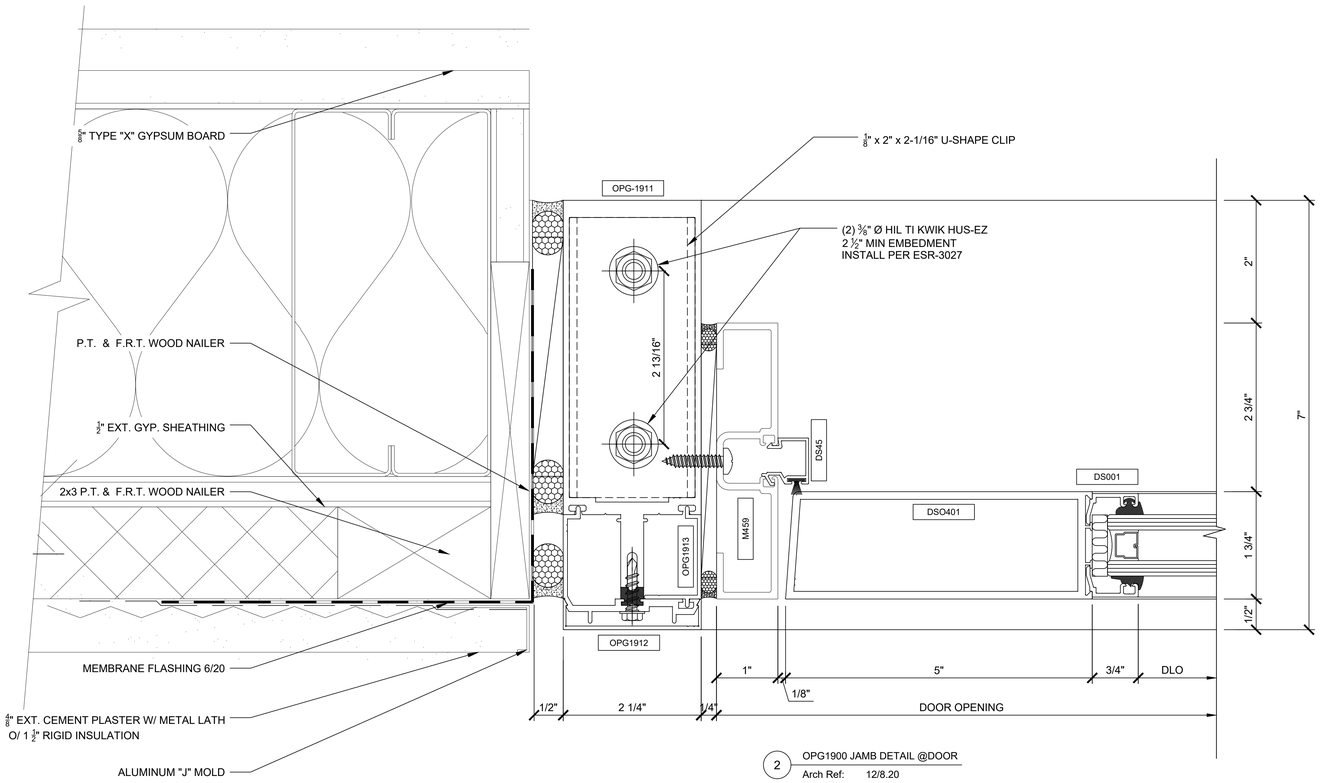

2 OPG1900 JAMB DETAIL @DOOR

Arch Ref: 12/8.20
Shop Ref: -
Calc Ref: PAGE 16

IDENTIFICATION STAMP
DIV. OF THE STATE ARCHITECT
APP. 03-119458 INC:
REVIEWED FOR
SS ☑ FLS ☑ ACS ☑
DATE:05/23/2019

DIVISION OF STATE ARCHITECT
355 South Grand Avenue, Suite 2100
Los Angeles, California. 90012
ph: (213) 897-3995 Fax: (213) 897-3159
agency

tBP
architecture
planning
interiors

tBP/Architecture
4611 Teller Avenue
Newport Beach, CA 92660
ph: 949.673.0300 fx: 949.732.3895
architect

REGISTERED PROFESSIONAL ENGINEER
CRAIG M. HORNER
No. 84674
CIVIL
STATE OF CALIFORNIA
04/12/19
consultant

COMPTON COLLEGE
INSTRUCTIONAL BUILDING No. 2

COMPTON COMMUNITY COLLEGE DISTRICT
1111 E. ARTESIA BLVD. COMPTON, CA.

owner

tBP project number : 20998.00
file name:
drawn by: checked by:
date: 10/20/18

Rev:	date:	description:

THIS DRAWING AND THE DESIGNS, DEPICTIONS, IDEAS AND OTHER INFORMATION CONTAINED HEREIN CONSTITUTE UNPUBLISHED WORK BY tBP/ARCHITECTURE AND SHALL REMAIN THE PROPERTY OF tBP/ARCHITECTURE IN PERPETUITY. NO PART THEREOF SHALL BE REPRODUCED, DISCLOSED, DISTRIBUTED, SOLD, PUBLISHED OR OTHERWISE USED IN ANY WAY WITHOUT THE ADVANCED EXPRESS WRITTEN CONSENT OF tBP/ARCHITECTURE.

drawing title:
VERTICAL DETAILS
(OPG-1900)

drawing no.:
CW5.03

drawing of

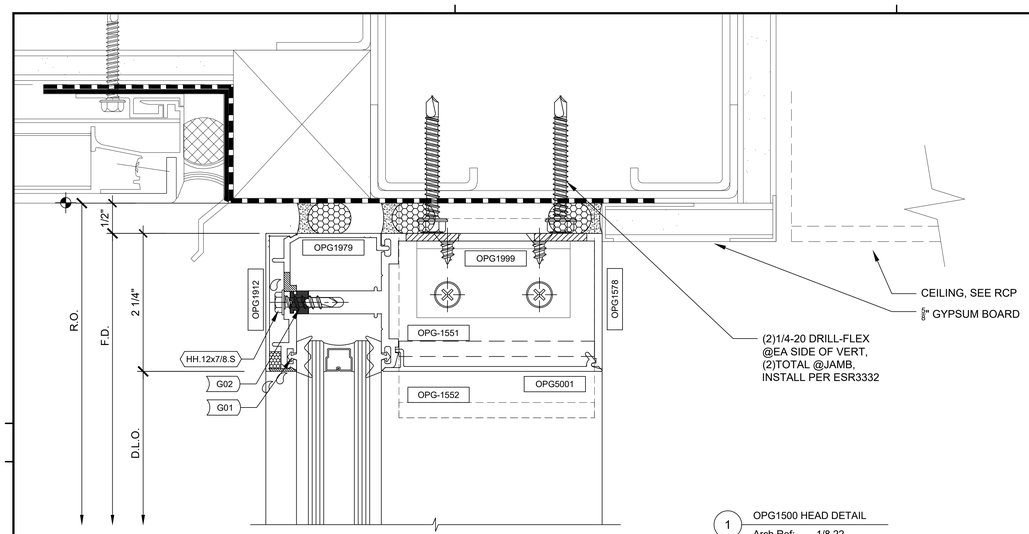

1 OPG1500 HEAD DETAIL
Arch Ref: 1/8.22
Shop Ref: -
Calc Ref: PAGE 10

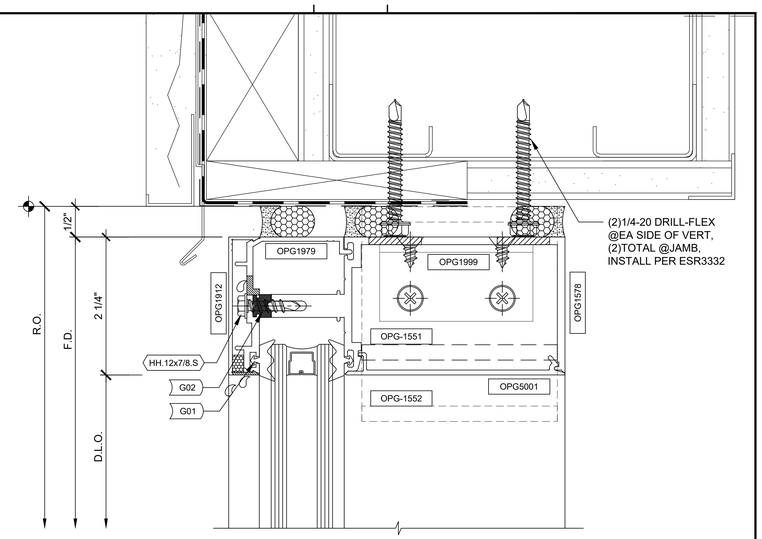

3 OPG1500 HEAD DETAIL
Arch Ref: 2/8.20
Shop Ref: -
Calc Ref: PAGE 10

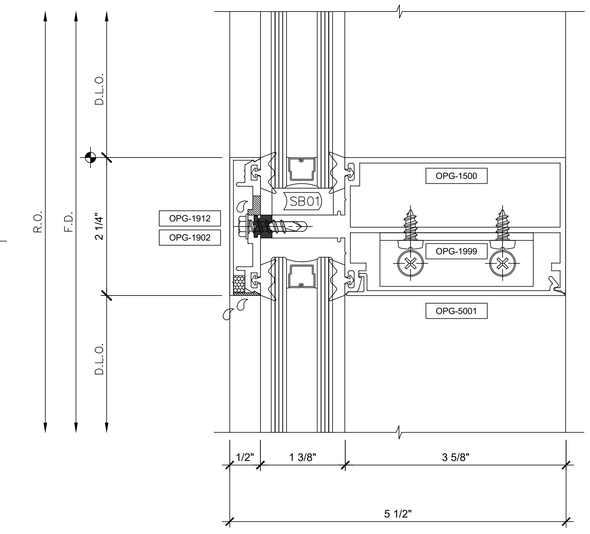

4 OPG1500 HORIZONTAL DETAIL
Arch Ref: 10B/8.20
Shop Ref: -
Calc Ref: -

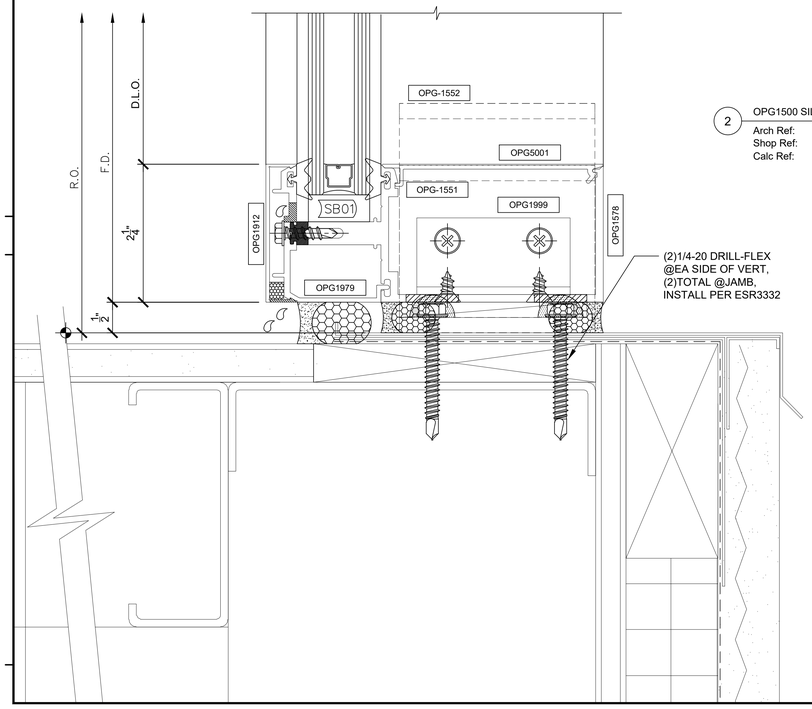

2 OPG1500 SILL DETAIL
Arch Ref: 17/8.22
Shop Ref: -
Calc Ref: PAGE 10

IDENTIFICATION STAMP
DIV. OF THE STATE ARCHITECT
APP. 03-119458 INC:
REVIEWED FOR
SS ☑ FLS ☑ ACS ☑
DATE:05/23/2019

DIVISION OF STATE ARCHITECT
355 South Grand Avenue, Suite 2100
Los Angeles, California. 90012
ph: (213) 897-3995 Fax: (213) 897-3159
agency

tBP
architecture
planning
interiors

tBP/Architecture
4611 Teller Avenue
Newport Beach, CA 92660
ph: 949.673.0300 fx: 949.732.3895
architect

REGISTERED PROFESSIONAL ENGINEER
CRAIG M. HORNER
No. 84674
CIVIL
STATE OF CALIFORNIA
04/12/19
consultant

COMPTON COLLEGE
INSTRUCTIONAL BUILDING No. 2

COMPTON COMMUNITY COLLEGE DISTRICT
1111 E. ARTESIA BLVD. COMPTON, CA.

owner

tBP project number : 20998.00
file name:
drawn by: checked by:
date: 10/20/18

Rev:	date:	description:

THIS DRAWING AND THE DESIGNS, DEPICTIONS, IDEAS AND OTHER INFORMATION CONTAINED HEREIN CONSTITUTE UNPUBLISHED WORK OF tBP/ARCHITECTURE AND SHALL REMAIN THE PROPERTY OF tBP/ARCHITECTURE IN PERPETUITY. NO PART HEREOF SHALL BE REPRODUCED, DISCLOSED, DISTRIBUTED, SOLD, PUBLISHED OR OTHERWISE USED IN ANY WAY WITHOUT THE ADVANCED EXPRESS WRITTEN CONSENT OF tBP/ARCHITECTURE.

drawing title:
HORIZONTAL DETAILS
(OPG-1500)

drawing no.:
CW6.01

drawing of

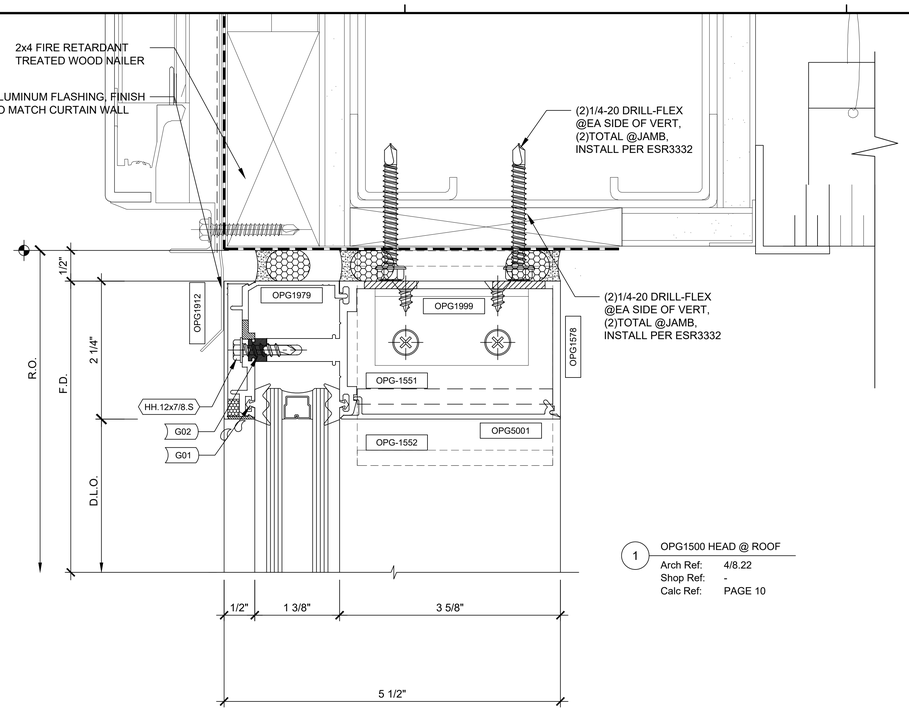

1 OPG1500 HEAD @ ROOF

Arch Ref: 4/8.22
Shop Ref: -
Calc Ref: PAGE 10

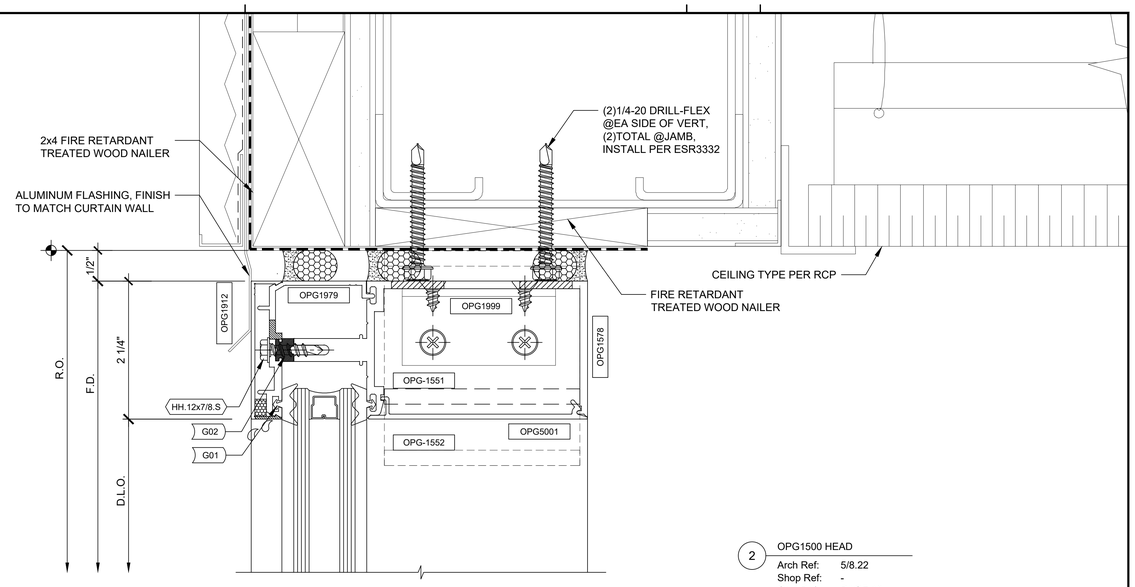

2 OPG1500 HEAD

Arch Ref: 5/8.22
Shop Ref: -
Calc Ref: PAGE 10

IDENTIFICATION STAMP
DIV. OF THE STATE ARCHITECT
APP. 03-119458 INC:
REVIEWED FOR
SS ☑ FLS ☑ ACS ☑
DATE:05/23/2019

DIVISION OF STATE ARCHITECT
355 South Grand Avenue, Suite 2100
Los Angeles, California. 90012
ph: (213) 897-3995 Fax: (213) 897-3159
agency

tBP
architecture
planning
interiors

tBP/Architecture
4611 Teller Avenue
Newport Beach, CA 92660
ph: 949.673.0300 fx: 949.732.3895
architect

REGISTERED PROFESSIONAL ENGINEER
CRAIG M. ROHRER
No. 84674
CIVIL
STATE OF CALIFORNIA

04/12/19
consultant

COMPTON COLLEGE
INSTRUCTIONAL BUILDING No. 2

COMPTON COMMUNITY COLLEGE DISTRICT
1111 E. ARTESIA BLVD. COMPTON, CA.
owner

tBP project number : 20998.00
file name:
drawn by: checked by:
date: 10/20/18

Rev:	date:	description:

THIS DRAWING AND THE DESIGNS, DEPICTIONS, IDEAS AND OTHER INFORMATION CONTAINED HEREIN CONSTITUTE UNPUBLISHED WORK OF tBP/ARCHITECTURE AND SHALL REMAIN THE PROPERTY OF tBP/ARCHITECTURE IN PERPETUITY. NO PART THEREOF SHALL BE REPRODUCED, DISCLOSED, DISTRIBUTED, SOLD, PUBLISHED OR OTHERWISE USED IN ANY WAY WITHOUT THE ADVANCED EXPRESS WRITTEN CONSENT OF tBP/ARCHITECTURE.

drawing title:
HORIZONTAL DETAILS
(OPG-1500)

drawing no.:
CW6.02
drawing of

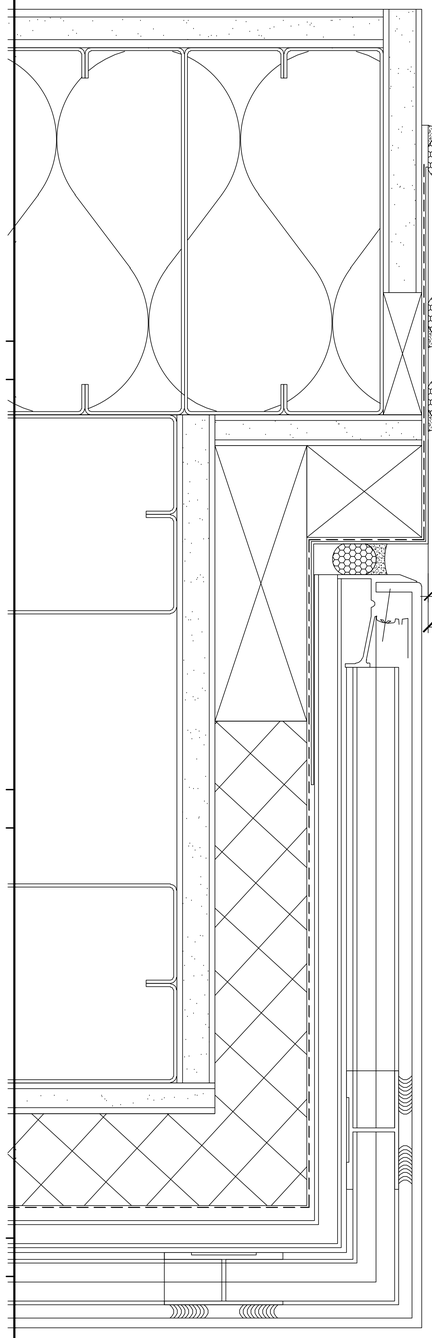

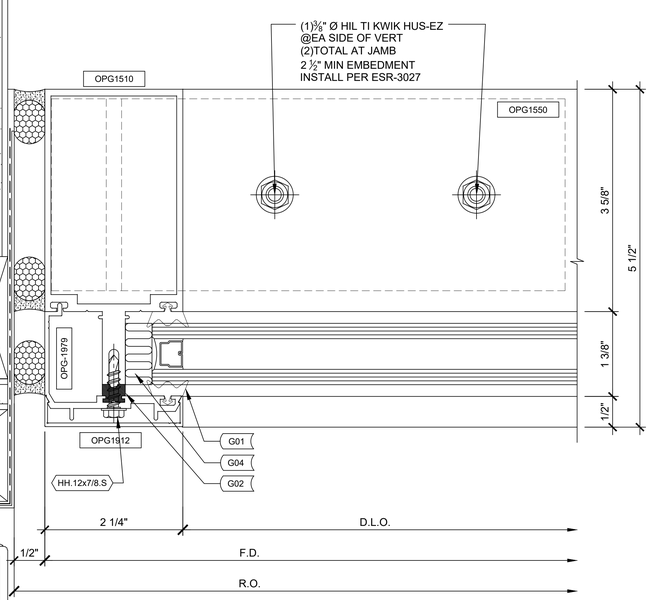

1 OPG1500 JAMB DETAIL @ ROOF
Arch Ref: 11/8.22
Shop Ref: -
Calc Ref: PAGE 16

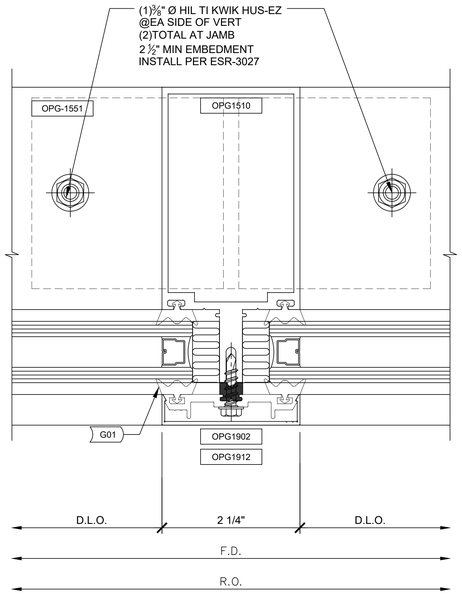

2 OPG1500 INTE. VERTICAL DETAIL
Arch Ref: 10A&10/8.22
Shop Ref: -
Calc Ref: PAGE 16

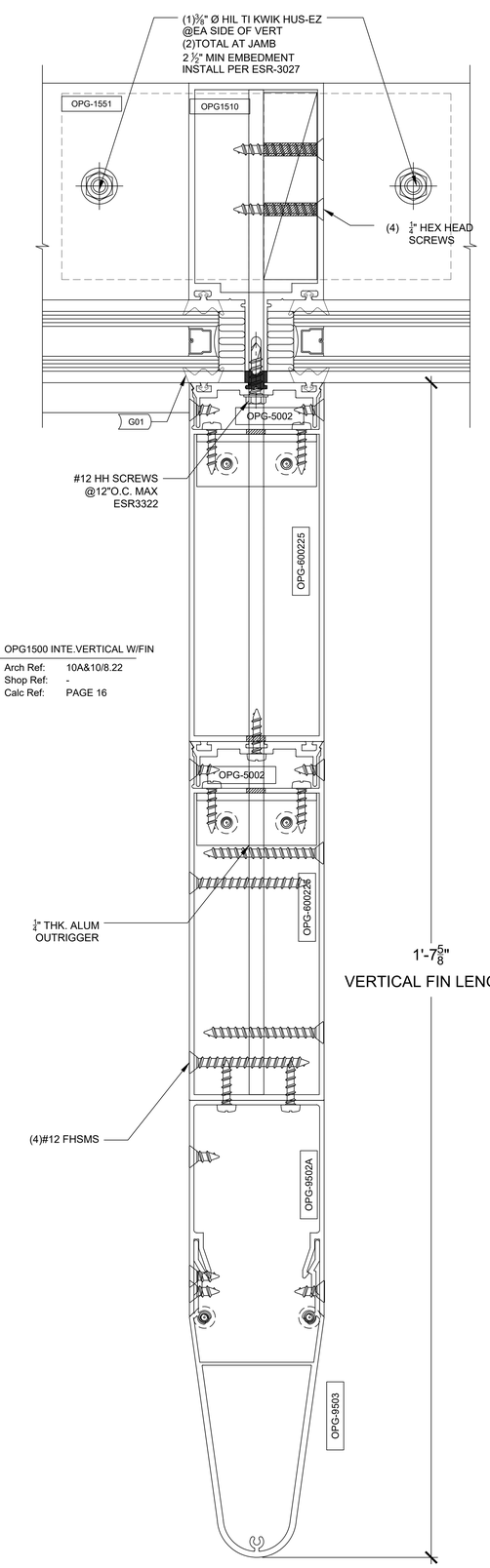

3 OPG1500 INTE.VERTICAL W/FIN
Arch Ref: 10A&10/8.22
Shop Ref: -
Calc Ref: PAGE 16

IDENTIFICATION STAMP
DIV. OF THE STATE ARCHITECT
APP. 03-119458 INC:
REVIEWED FOR
SS ☑ FLS ☑ ACS ☑
DATE:05/23/2019

DIVISION OF STATE ARCHITECT
355 South Grand Avenue, Suite 2100
Los Angeles, California. 90012
ph: (213) 897-3995 Fax: (213) 897-3159
agency

tBP
architecture
planning
interiors

tBP/Architecture
4611 Teller Avenue
Newport Beach, CA 92660
ph: 949.673.0300 fx: 949.732.3895
architect

REGISTERED PROFESSIONAL ENGINEER
CRAIG M. ROHNER
No. 84674
CIVIL
STATE OF CALIFORNIA
04/12/19

consultant

COMPTON COLLEGE
INSTRUCTIONAL BUILDING No. 2

COMPTON COMMUNITY COLLEGE DISTRICT
1111 E. ARTESIA BLVD. COMPTON, CA.

owner

tBP project number : 20998.00
file name:
drawn by: checked by:
date: 10/20/18

Rev:	date:	description:

THIS DRAWING AND THE DESIGNS, DEPICTIONS, IDEAS AND OTHER INFORMATION CONTAINED HEREIN CONSTITUTE UNPUBLISHED WORK OF tBP/ARCHITECTURE AND SHALL REMAIN THE PROPERTY OF tBP/ARCHITECTURE IN PERPETUITY. NO PART THEREOF SHALL BE REPRODUCED, DISCLOSED, DISTRIBUTED, SOLD, PUBLISHED OR OTHERWISE USED IN ANY WAY WITHOUT THE ADVANCED EXPRESS WRITTEN CONSENT OF tBP/ARCHITECTURE.

drawing title:
VERTICAL DETAILS
(OPG-1500)

drawing no.:
CW7.01
drawing of

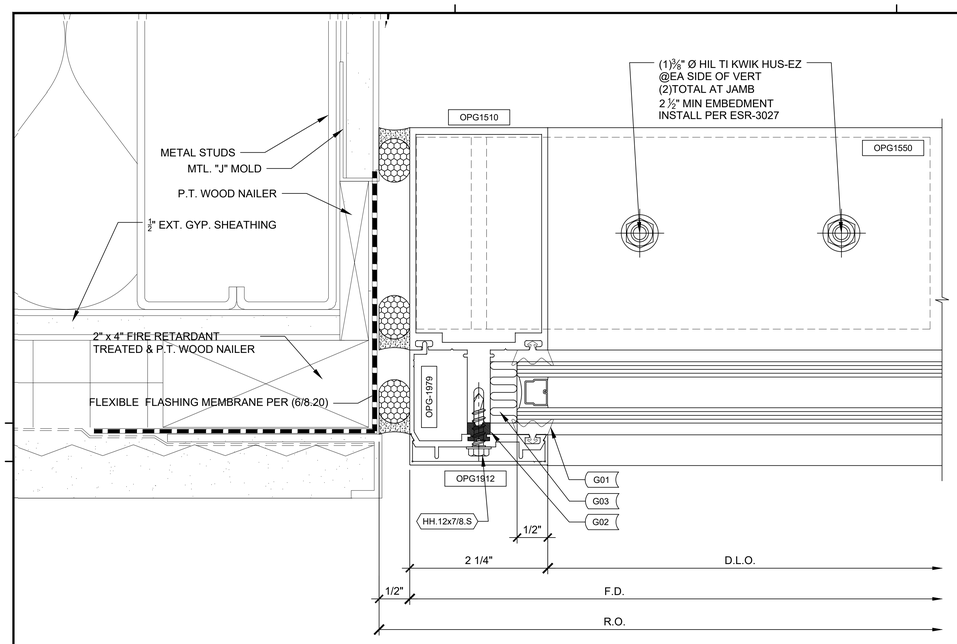

1 OPG1500 JAMB DETAIL

Arch Ref: 15/8.22
Shop Ref: -
Calc Ref: PAGE 16

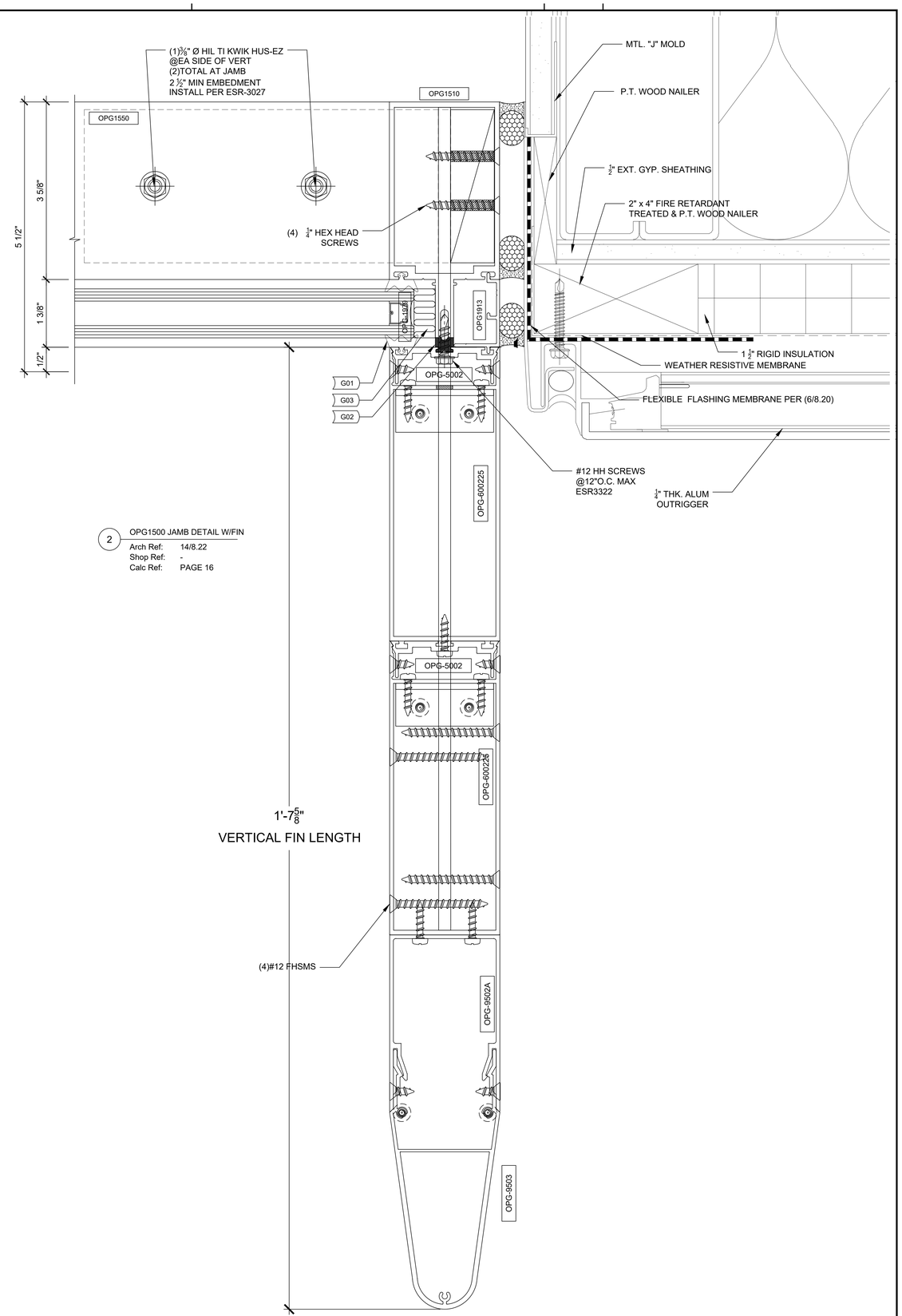

2 OPG1500 JAMB DETAIL W/FIN

Arch Ref: 14/8.22
Shop Ref: -
Calc Ref: PAGE 16

IDENTIFICATION STAMP
DIV. OF THE STATE ARCHITECT
APP. 03-119458 INC:
REVIEWED FOR
SS ☑ FLS ☑ ACS ☑
DATE: 05/23/2019

DIVISION OF STATE ARCHITECT
355 South Grand Avenue, Suite 2100
Los Angeles, California. 90012
ph: (213) 897-3995 Fax: (213) 897-3159
agency

tBP
architecture
planning
interiors

tBP/Architecture
4611 Teller Avenue
Newport Beach, CA 92660
ph: 949.673.0300 fx: 949.732.3895
architect

REGISTERED PROFESSIONAL ENGINEER
CRAIG M. HORNER
No. 84674
CIVIL
STATE OF CALIFORNIA

04/12/19
consultant

COMPTON COLLEGE
INSTRUCTIONAL BUILDING No. 2

COMPTON COMMUNITY COLLEGE DISTRICT
1111 E. ARTESIA BLVD. COMPTON, CA.

owner

tBP project number : 20998.00
file name:
drawn by: checked by:
date: 10/20/18

Rev:	date:	description:

THIS DRAWING AND THE DESIGNS, DEPICTIONS, IDEAS AND OTHER INFORMATION CONTAINED HEREIN CONSTITUTE UNPUBLISHED WORK OF tBP/ARCHITECTURE AND SHALL REMAIN THE PROPERTY OF tBP/ARCHITECTURE IN PERPETUITY. NO PART THEREOF SHALL BE REPRODUCED, DISCLOSED, DISTRIBUTED, SOLD, PUBLISHED OR OTHERWISE USED IN ANY WAY WITHOUT THE ADVANCED EXPRESS WRITTEN CONSENT OF tBP/ARCHITECTURE.

drawing title:
VERTICAL. DETAILS
(OPG-1500)

drawing no.:
CW7.02

drawing of

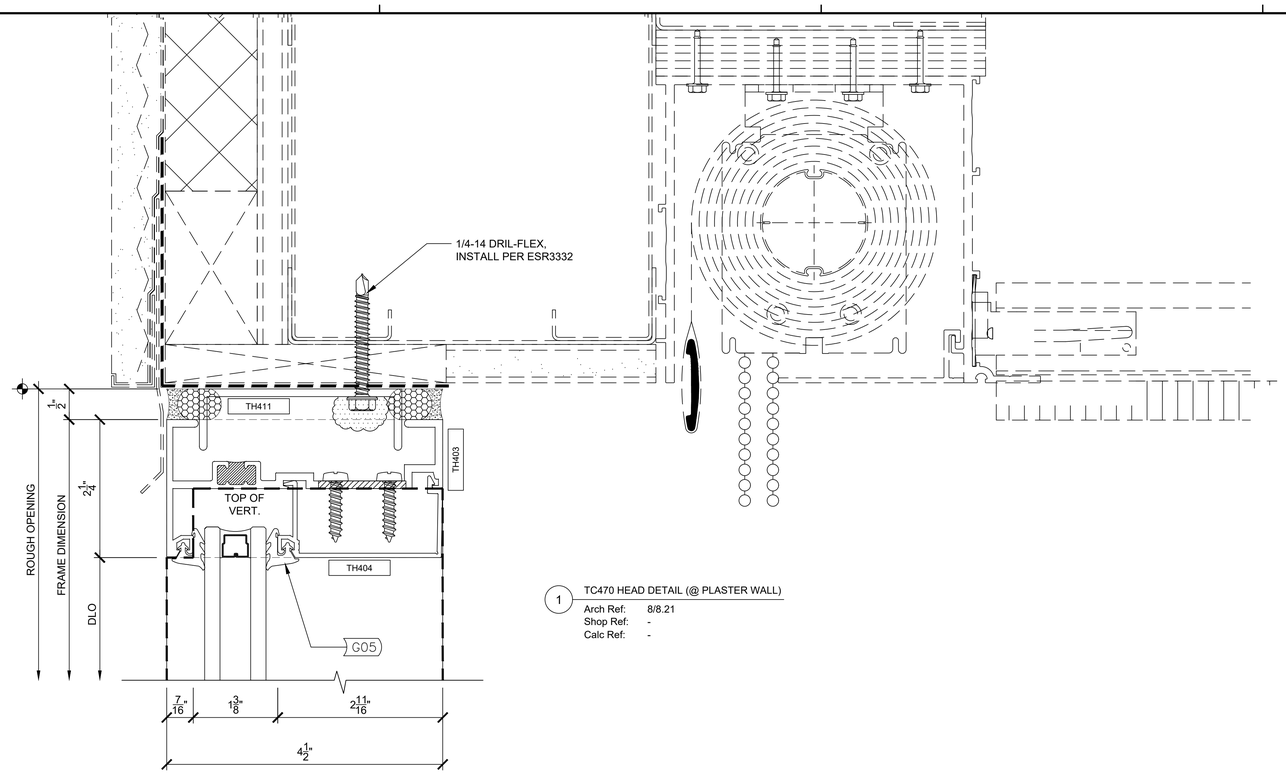

1 TC470 HEAD DETAIL (@ PLASTER WALL)

Arch Ref: 8/8.21
Shop Ref: -
Calc Ref: -

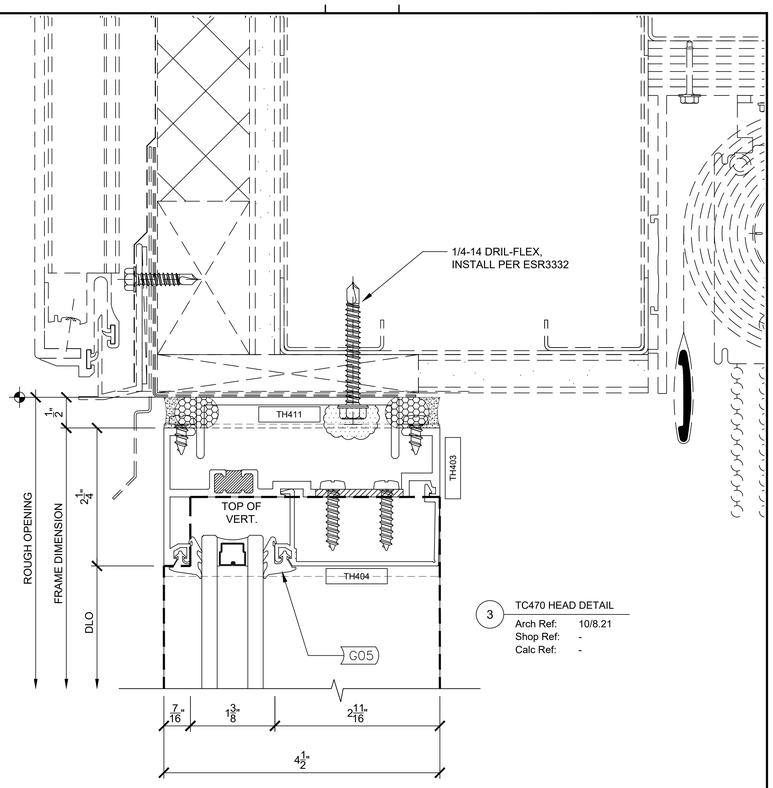

3 TC470 HEAD DETAIL

Arch Ref: 10/8.21
Shop Ref: -
Calc Ref: -

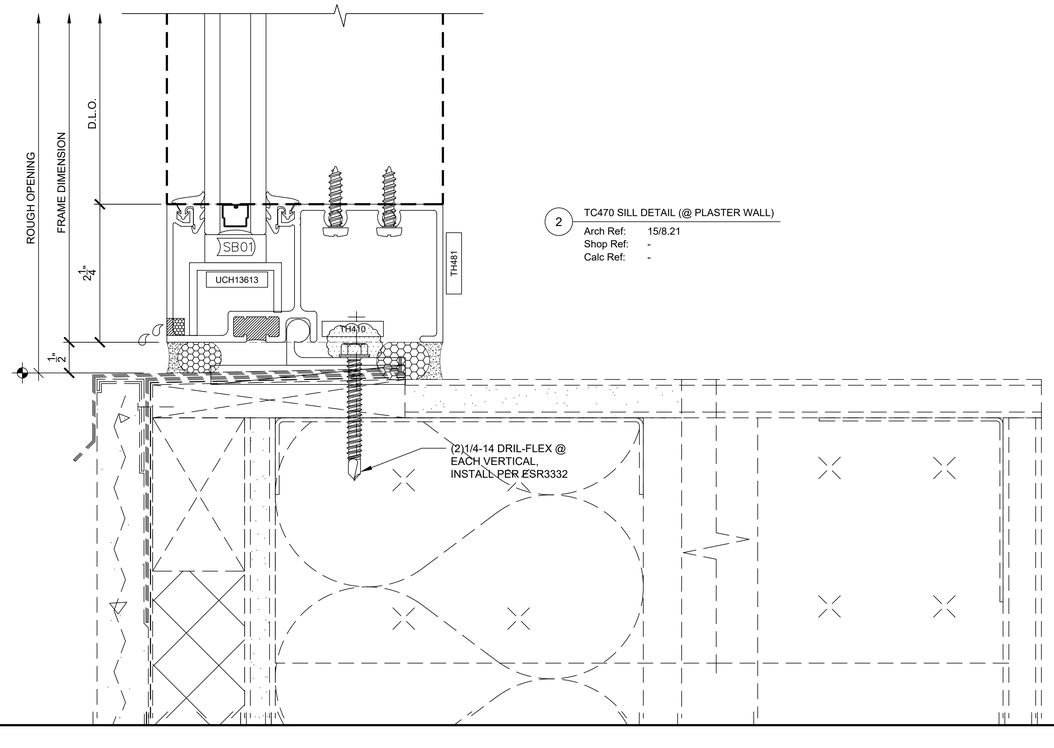

2 TC470 SILL DETAIL (@ PLASTER WALL)

Arch Ref: 15/8.21
Shop Ref: -
Calc Ref: -

IDENTIFICATION STAMP
DIV. OF THE STATE ARCHITECT
APP. 03-119458 INC:
REVIEWED FOR
SS ☑ FLS ☑ ACS ☑
DATE:05/23/2019

DIVISION OF STATE ARCHITECT
355 South Grand Avenue, Suite 2100
Los Angeles, California. 90012
ph: (213) 897-3995 Fax: (213) 897-3159
agency

tBP
architecture
planning
interiors
tBP/Architecture
4611 Teller Avenue
Newport Beach, CA 92660
ph: 949.673.0300 fx: 949.732.3895
architect

REGISTERED PROFESSIONAL ENGINEER
CRAIG M. ROPNER
No. 84674
CIVIL
STATE OF CALIFORNIA
04/12/19
consultant

COMPTON COLLEGE
INSTRUCTIONAL BUILDING No. 2

COMPTON COMMUNITY COLLEGE DISTRICT
1111 E. ARTESIA BLVD. COMPTON, CA.

owner

tBP project number : 20998.00
file name:
drawn by: checked by:
date: 10/20/18

Rev:	date:	description:

THIS DRAWING AND THE DESIGNS, DEPICTIONS, IDEAS AND OTHER INFORMATION CONTAINED HEREIN CONSTITUTE UNPUBLISHED WORK OF tBP/ARCHITECTURE AND SHALL REMAIN THE PROPERTY OF tBP/ARCHITECTURE IN PERPETUITY. NO PART THEREOF SHALL BE REPRODUCED, DISCLOSED, DISTRIBUTED, SOLD, PUBLISHED OR OTHERWISE USED IN ANY WAY WITHOUT THE ADVANCED EXPRESS WRITTEN CONSENT OF tBP/ARCHITECTURE.

drawing title:
HORIZONTAL DETAILS
(TC470)

drawing no.:
CW8.01
drawing of

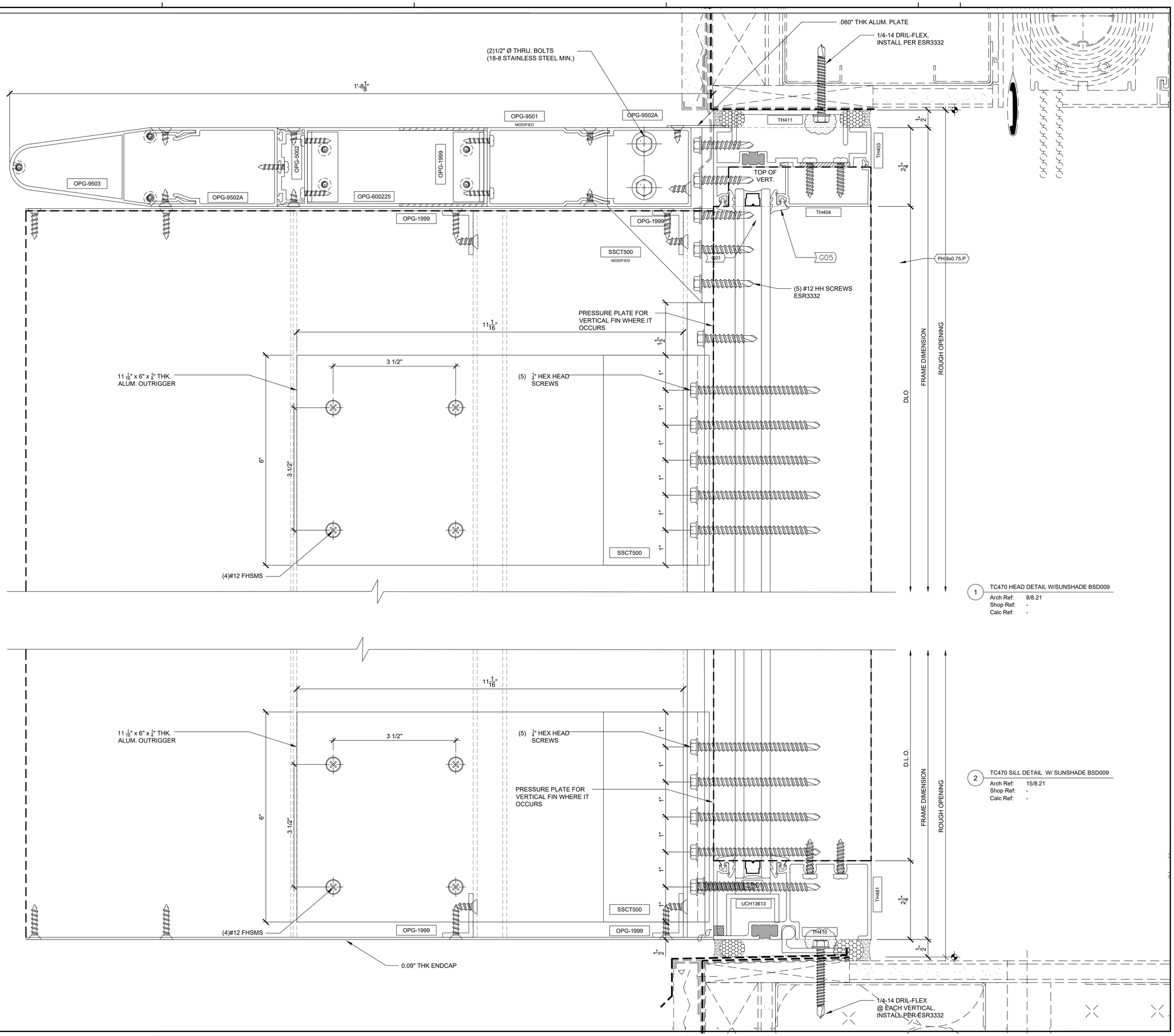

IDENTIFICATION STAMP
DIV. OF THE STATE ARCHITECT
APP. 03-119458 INC:
REVIEWED FOR
SS ☑ FLS ☑ ACS ☑
DATE:05/23/2019

DIVISION OF STATE ARCHITECT
355 South Grand Avenue, Suite 2100
Los Angeles, California. 90012
ph: (213) 897-3995 Fax: (213) 897-3159
agency

tBP
architecture
planning
interiors
tBP/Architecture
4611 Teller Avenue
Newport Beach, CA 92660
ph: 949.673.0300 fx: 949.732.3895
architect

REGISTERED PROFESSIONAL ENGINEER
CRAIG M. HOWER
No. 84674
CIVIL
STATE OF CALIFORNIA
04/12/19
consultant

COMPTON COLLEGE
INSTRUCTIONAL BUILDING No. 2

COMPTON COMMUNITY COLLEGE DISTRICT
1111 E. ARTESIA BLVD. COMPTON, CA.

owner

tBP project number : 20998.00
file name:
drawn by: checked by:
date: 10/20/18

Rev:	date:	description:

THIS DRAWING AND THE DESIGNS, DEPICTIONS, IDEAS AND OTHER INFORMATION CONTAINED HEREIN CONSTITUTE UNPUBLISHED WORK OF tBP/ARCHITECTURE AND SHALL REMAIN THE PROPERTY OF tBP/ARCHITECTURE IN PERPETUITY. NO PART THEREOF SHALL BE REPRODUCED, DISCLOSED, DISTRIBUTED, SOLD, PUBLISHED OR OTHERWISE USED IN ANY WAY WITHOUT THE ADVANCED EXPRESS WRITTEN CONSENT OF tBP/ARCHITECTURE.

SCALE : FULL

drawing title:
HORIZONTAL DETAILS (TC470)

drawing no.:
CW8.02
drawing of

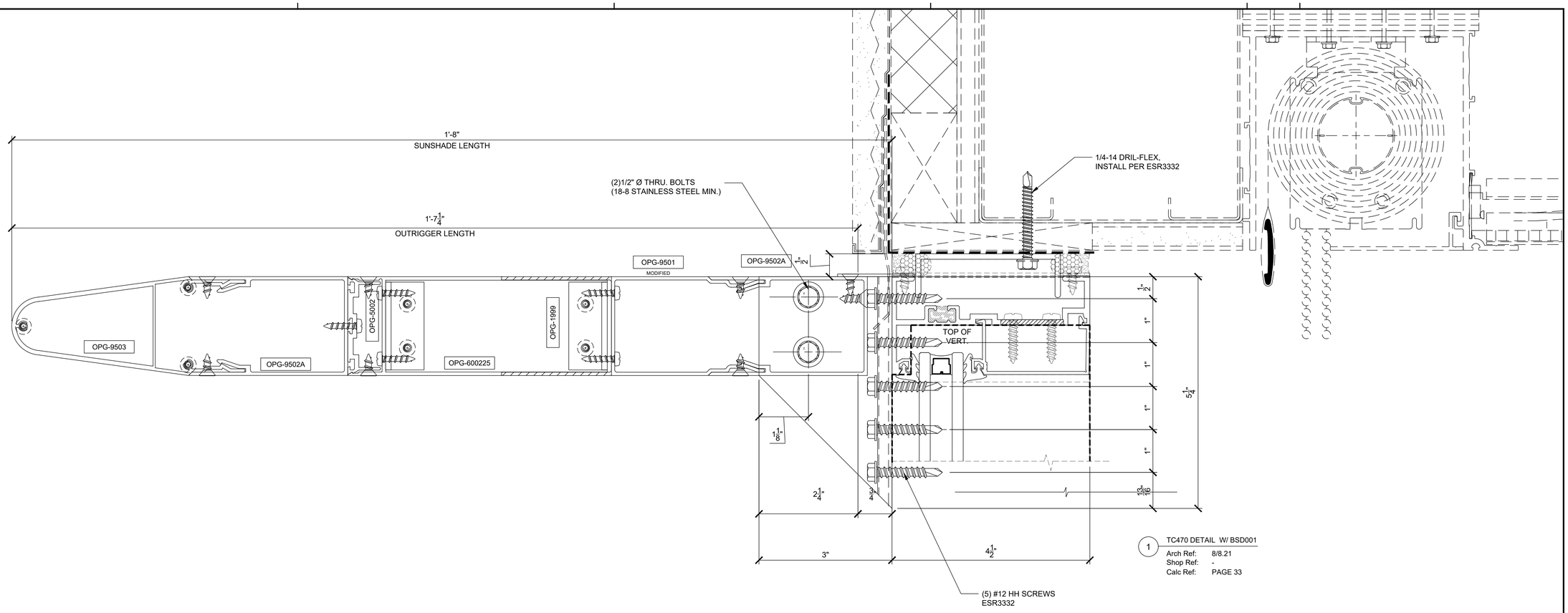

1 TC470 DETAIL W/ BSD001
Arch Ref: 8/8.21
Shop Ref: -
Calc Ref: PAGE 33

IDENTIFICATION STAMP
DIV. OF THE STATE ARCHITECT
APP. 03-119458 INC:
REVIEWED FOR
SS ☑ FLS ☑ ACS ☑
DATE:05/23/2019

DIVISION OF STATE ARCHITECT
355 South Grand Avenue, Suite 2100
Los Angeles, California. 90012
ph: (213) 897-3995 Fax: (213) 897-3159
agency

tBP
architecture
planning
interiors
tBP/Architecture
4611 Teller Avenue
Newport Beach, CA 92660
ph: 949.673.0300 fx: 949.732.3895
architect

REGISTERED PROFESSIONAL ENGINEER
CRAIG M. ROHRER
No. 84674
CIVIL
STATE OF CALIFORNIA
04/12/19
consultant

COMPTON COLLEGE
INSTRUCTIONAL BUILDING No. 2
COMPTON COMMUNITY COLLEGE DISTRICT
1111 E. ARTESIA BLVD. COMPTON, CA.
owner

tBP project number : 20998.00
file name:
drawn by: checked by:
date: 10/20/18

Rev:	date:	description:

THIS DRAWING AND THE DESIGNS, DEPICTIONS, IDEAS AND OTHER INFORMATION CONTAINED HEREIN CONSTITUTE UNPUBLISHED WORK OF tBP/ARCHITECTURE AND SHALL REMAIN THE PROPERTY OF tBP/ARCHITECTURE IN PERPETUITY. NO PART THEREOF SHALL BE REPRODUCED, DISCLOSED, DISTRIBUTED, SOLD, PUBLISHED OR OTHERWISE USED IN ANY WAY WITHOUT THE ADVANCED EXPRESS WRITTEN CONSENT OF tBP/ARCHITECTURE.
SCALE : FULL

drawing title:
HORIZONTAL DETAILS
(TC470)

drawing no.:
CW8.03
drawing of

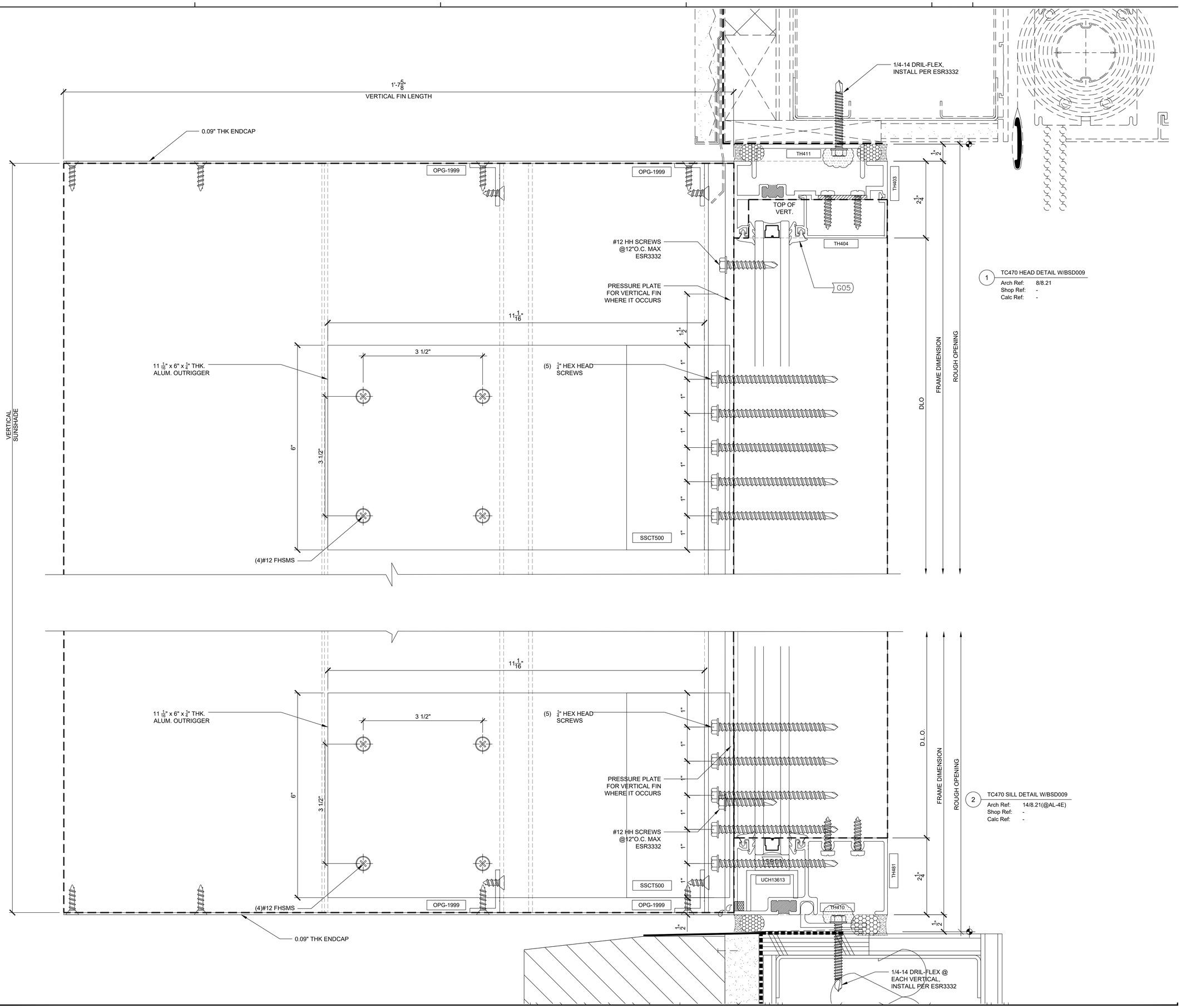

IDENTIFICATION STAMP
DIV. OF THE STATE ARCHITECT
APP. 03-119458 INC:
REVIEWED FOR
SS ☑ FLS ☑ ACS ☑
DATE:05/23/2019

DIVISION OF STATE ARCHITECT
355 South Grand Avenue, Suite 2100
Los Angeles, California. 90012
ph: (213) 897-3995 Fax: (213) 897-3159
agency

tBP
architecture
planning
interiors

tBP/Architecture
4611 Teller Avenue
Newport Beach, CA 92660
ph: 949.673.0300 fx: 949.732.3895
architect

REGISTERED PROFESSIONAL ENGINEER
CRAIG M. HOGNESS
No. 84674
CIVIL
STATE OF CALIFORNIA
04/12/19
consultant

COMPTON COLLEGE
INSTRUCTIONAL BUILDING No. 2

COMPTON COMMUNITY COLLEGE DISTRICT
1111 E. ARTESIA BLVD. COMPTON, CA.

owner

tBP project number : 20998.00
file name:
drawn by: checked by:
date: 10/20/18

Rev:	date:	description:

THIS DRAWING AND THE DESIGNS, DEPICTIONS, IDEAS AND OTHER INFORMATION CONTAINED HEREIN CONSTITUTE UNPUBLISHED WORK BY tBP/ARCHITECTURE AND SHALL REMAIN THE PROPERTY OF tBP/ARCHITECTURE IN PERPETUITY. NO PART THEREOF SHALL BE REPRODUCED, DISCLOSED, DISTRIBUTED, SOLD, PUBLISHED OR OTHERWISE USED IN ANY WAY WITHOUT THE ADVANCED EXPRESS WRITTEN CONSENT OF tBP/ARCHITECTURE.

SCALE : FULL

drawing title:
HORIZONTAL DETAILS
(TC470)

drawing no.:
CW8.04

drawing of

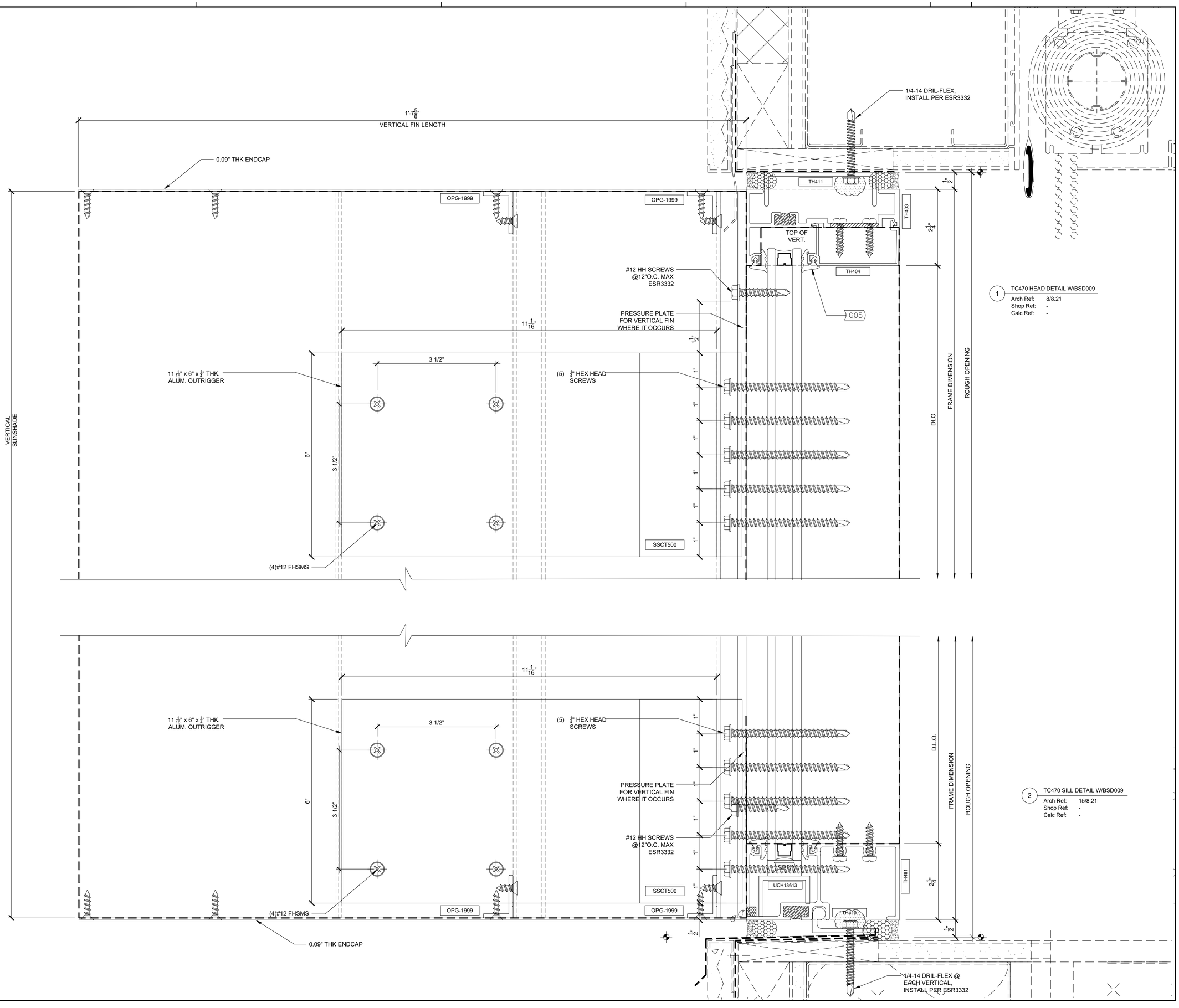

1 TC470 HEAD DETAIL W/BSD009
Arch Ref: 8/8.21
Shop Ref: -
Calc Ref: -

2 TC470 SILL DETAIL W/BSD009
Arch Ref: 15/8.21
Shop Ref: -
Calc Ref: -

IDENTIFICATION STAMP
DIV. OF THE STATE ARCHITECT
APP. 03-119458 INC:
REVIEWED FOR
SS ☑ FLS ☑ ACS ☑
DATE:05/23/2019

DIVISION OF STATE ARCHITECT
355 South Grand Avenue, Suite 2100
Los Angeles, California. 90012
ph: (213) 897-3995 Fax: (213) 897-3159
agency

tBP
architecture
planning
interiors

tBP/Architecture
4611 Teller Avenue
Newport Beach, CA 92660
ph: 949.673.0300 fx: 949.732.3895
architect

REGISTERED PROFESSIONAL ENGINEER
CRAIG M. HORNER
No. 84674
CIVIL
STATE OF CALIFORNIA
04/12/19
consultant

COMPTON COLLEGE
INSTRUCTIONAL BUILDING No. 2

COMPTON COMMUNITY COLLEGE DISTRICT
1111 E. ARTESIA BLVD. COMPTON, CA.

owner

tBP project number : 20998.00
file name:
drawn by: checked by:
date: 10/20/18

Rev:	date:	description:

THIS DRAWING AND THE DESIGNS, DEPICTIONS, IDEAS AND OTHER INFORMATION CONTAINED HEREIN CONSTITUTE UNPUBLISHED WORK OF tBP/ARCHITECTURE AND SHALL REMAIN THE PROPERTY OF tBP/ARCHITECTURE IN PERPETUITY. NO PART THEREOF SHALL BE REPRODUCED, DISCLOSED, DISTRIBUTED, SOLD, PUBLISHED OR OTHERWISE USED IN ANY WAY WITHOUT THE ADVANCED EXPRESS WRITTEN CONSENT OF tBP/ARCHITECTURE.

SCALE: FULL

drawing title:
HORIZONTAL DETAILS
(TC470)

drawing no.:
CW8.05
drawing of

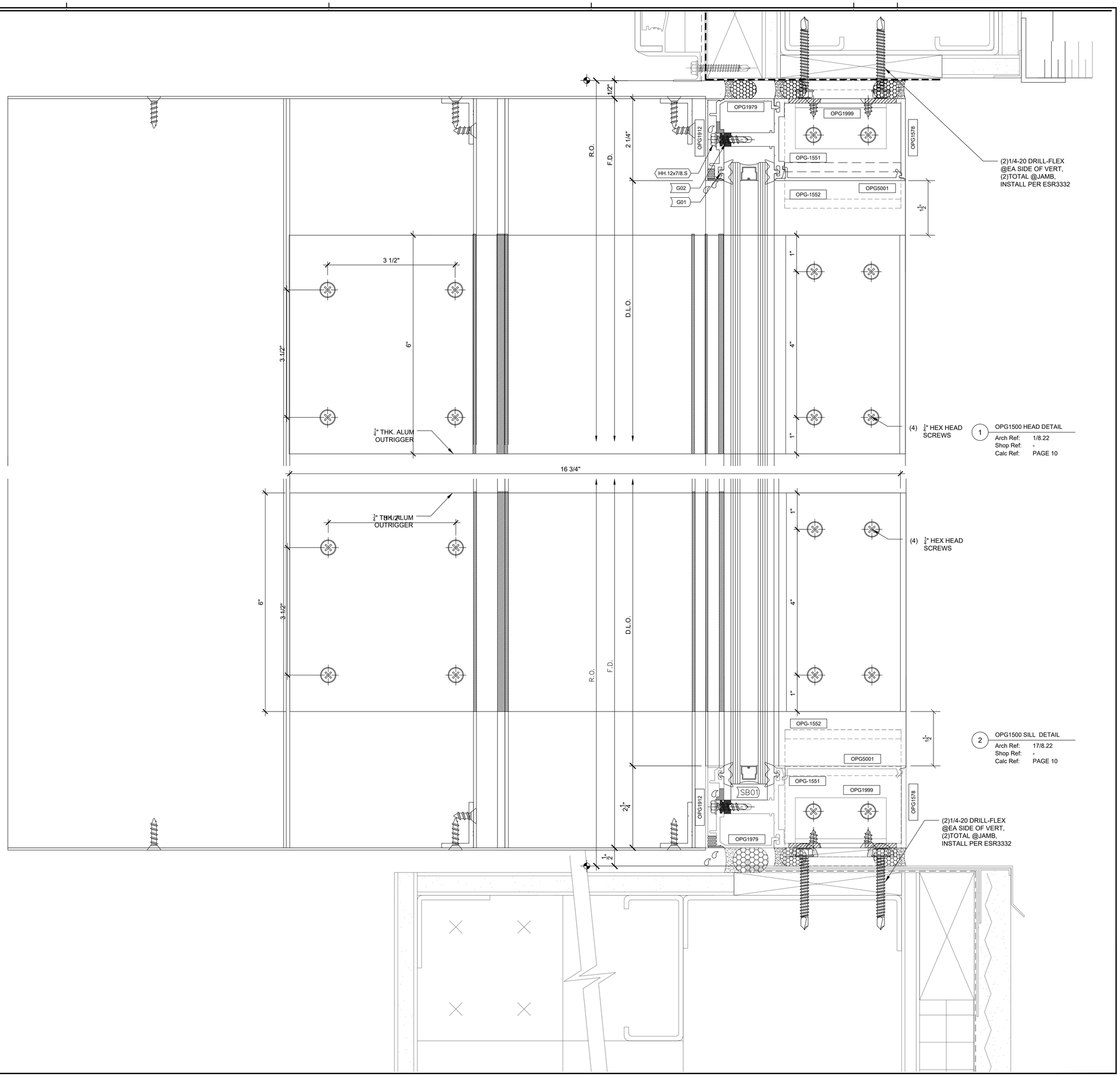

1 OPG1500 HEAD DETAIL
Arch Ref: 1/8.22
Shop Ref: -
Calc Ref: PAGE 10

2 OPG1500 SILL DETAIL
Arch Ref: 17/8.22
Shop Ref: -
Calc Ref: PAGE 10

IDENTIFICATION STAMP
DIV. OF THE STATE ARCHITECT
APP. 03-119458 INC:
REVIEWED FOR
SS ☑ FLS ☑ ACS ☑
DATE:05/23/2019

DIVISION OF STATE ARCHITECT
355 South Grand Avenue, Suite 2100
Los Angeles, California. 90012
ph: (213) 897-3995 Fax: (213) 897-3159
agency

tBP
architecture
planning
interiors

tBP/Architecture
4611 Teller Avenue
Newport Beach, CA 92660
ph: 949.673.0300 fx: 949.732.3895
architect

REGISTERED PROFESSIONAL ENGINEER
CRAIG M. HORNER
No. 84674
CIVIL
STATE OF CALIFORNIA
04/12/19
consultant

COMPTON COLLEGE
INSTRUCTIONAL BUILDING No. 2

COMPTON COMMUNITY COLLEGE DISTRICT
1111 E. ARTESIA BLVD. COMPTON, CA.
owner

tBP project number : 20998.00
file name:
drawn by: checked by:
date: 10/20/18

Rev:	date:	description:

THIS DRAWING AND THE DESIGNS, DEPICTIONS, IDEAS AND OTHER INFORMATION CONTAINED HEREIN CONSTITUTE UNPUBLISHED WORK OF tBP/ARCHITECTURE AND SHALL REMAIN THE PROPERTY OF tBP/ARCHITECTURE IN PERPETUITY. NO PART THEREOF SHALL BE REPRODUCED, DISCLOSED, DISTRIBUTED, SOLD, PUBLISHED OR OTHERWISE USED IN ANY WAY WITHOUT THE ADVANCED EXPRESS WRITTEN CONSENT OF tBP/ARCHITECTURE.
SCALE : FULL

drawing title:
HORIZONTAL DETAILS (OPG1500)

drawing no.:
CW8.06
drawing of

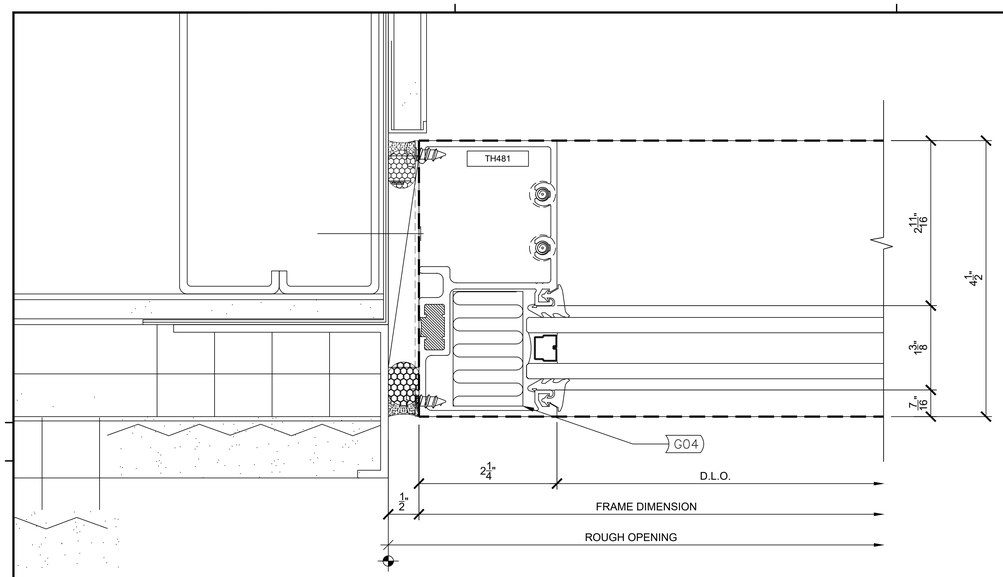

1 TC470 JAMB DETAIL@ PLASTER WALL

Arch Ref: 5/8.21
Shop Ref: -
Calc Ref: --

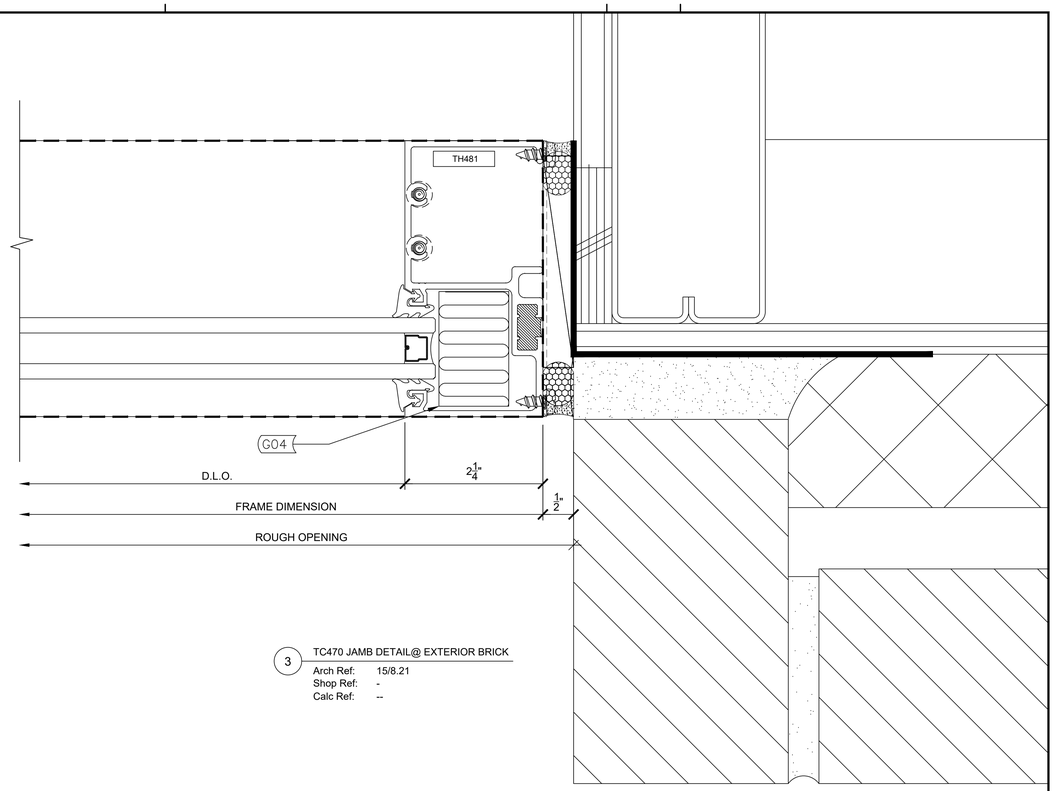

3 TC470 JAMB DETAIL@ EXTERIOR BRICK

Arch Ref: 15/8.21
Shop Ref: -
Calc Ref: --

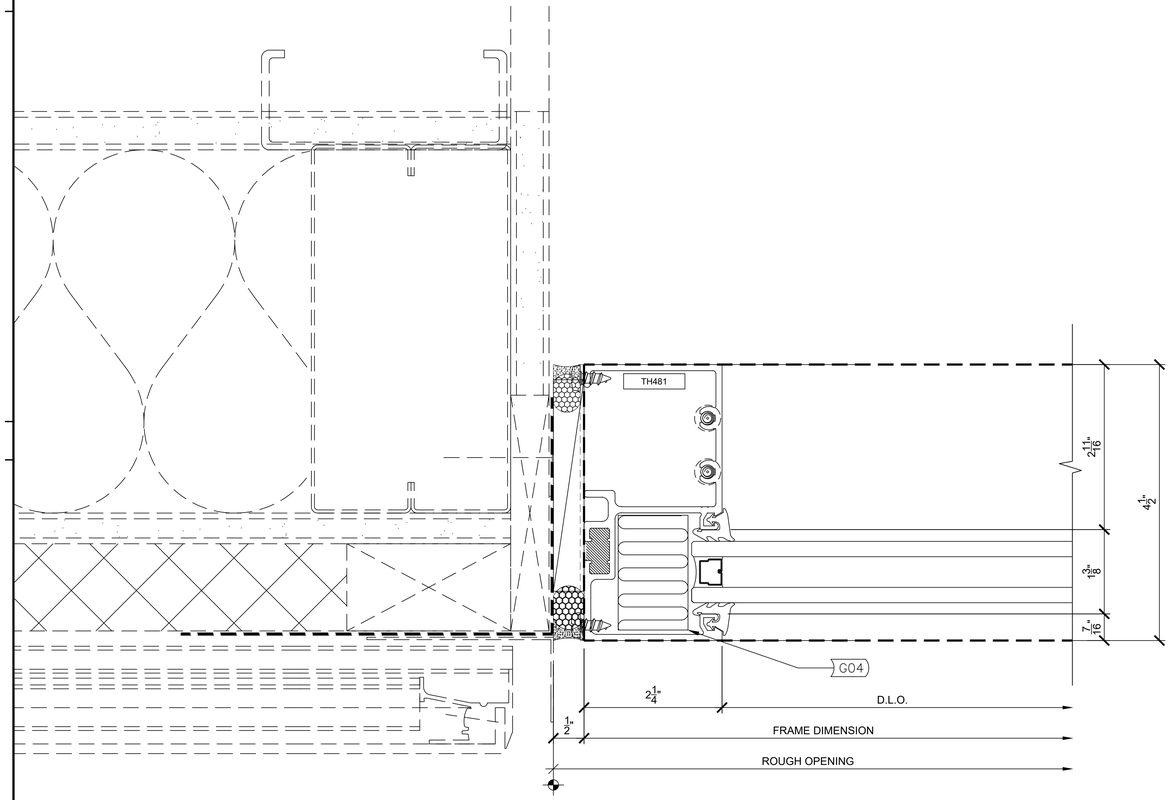

2 TC470 JAMB DETAIL @ METAL WALL

Arch Ref: 4/8.21
Shop Ref: -
Calc Ref: --

IDENTIFICATION STAMP
DIV. OF THE STATE ARCHITECT
APP. 03-119458 INC:
REVIEWED FOR
SS ☑ FLS ☑ ACS ☑
DATE:05/23/2019

DIVISION OF STATE ARCHITECT
355 South Grand Avenue, Suite 2100
Los Angeles, California. 90012
ph: (213) 897-3995 Fax: (213) 897-3159
agency

tBP
architecture
planning
interiors

tBP/Architecture
4611 Teller Avenue
Newport Beach, CA 92660
ph: 949.673.0300 fx: 949.732.3895
architect

REGISTERED PROFESSIONAL ENGINEER
CRAIG M. HORNER
No. 84674
CIVIL
STATE OF CALIFORNIA
04/12/19
consultant

COMPTON COLLEGE
INSTRUCTIONAL BUILDING No. 2

COMPTON COMMUNITY COLLEGE DISTRICT
1111 E. ARTESIA BLVD. COMPTON, CA.
owner

tBP project number : 20998.00
file name:
drawn by: checked by:
date: 10/20/18

Rev:	date:	description:

THIS DRAWING AND THE DESIGNS, DEPICTIONS, IDEAS AND OTHER INFORMATION CONTAINED HEREIN CONSTITUTE UNPUBLISHED WORK OF tBP/ARCHITECTURE AND SHALL REMAIN THE PROPERTY OF tBP/ARCHITECTURE IN PERPETUITY. NO PART THEREOF SHALL BE REPRODUCED, DISCLOSED, DISTRIBUTED, SOLD, PUBLISHED OR OTHERWISE USED IN ANY WAY WITHOUT THE ADVANCED EXPRESS WRITTEN CONSENT OF tBP/ARCHITECTURE.
SCALE : FULL

drawing title:
VERTICAL DETAILS
(TC-470)

drawing no.:
CW9.01
drawing of

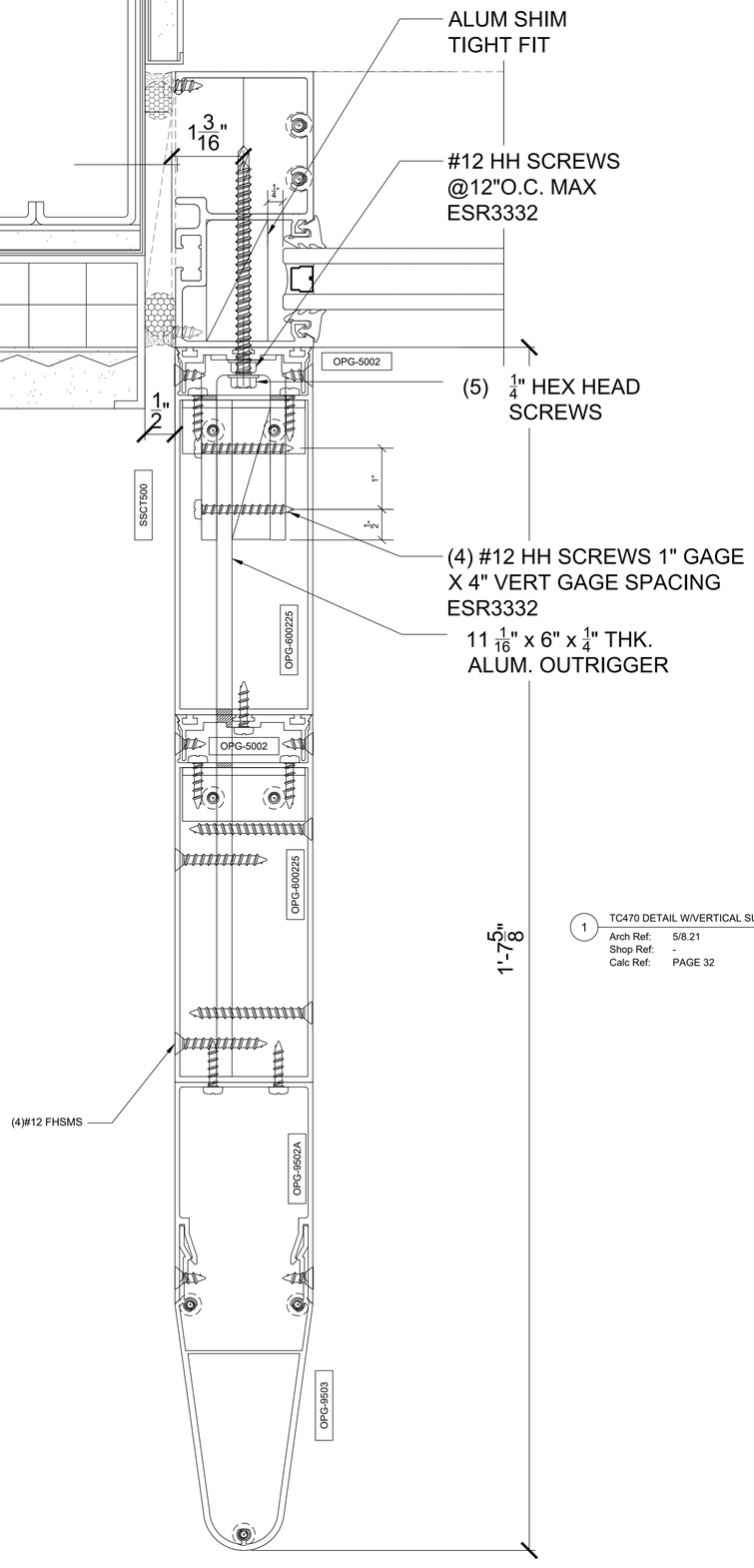

1 TC470 DETAIL W/VERTICAL SUNSHADE(@ PLASTER WALL)

Arch Ref: 5/8.21
Shop Ref: -
Calc Ref: PAGE 32

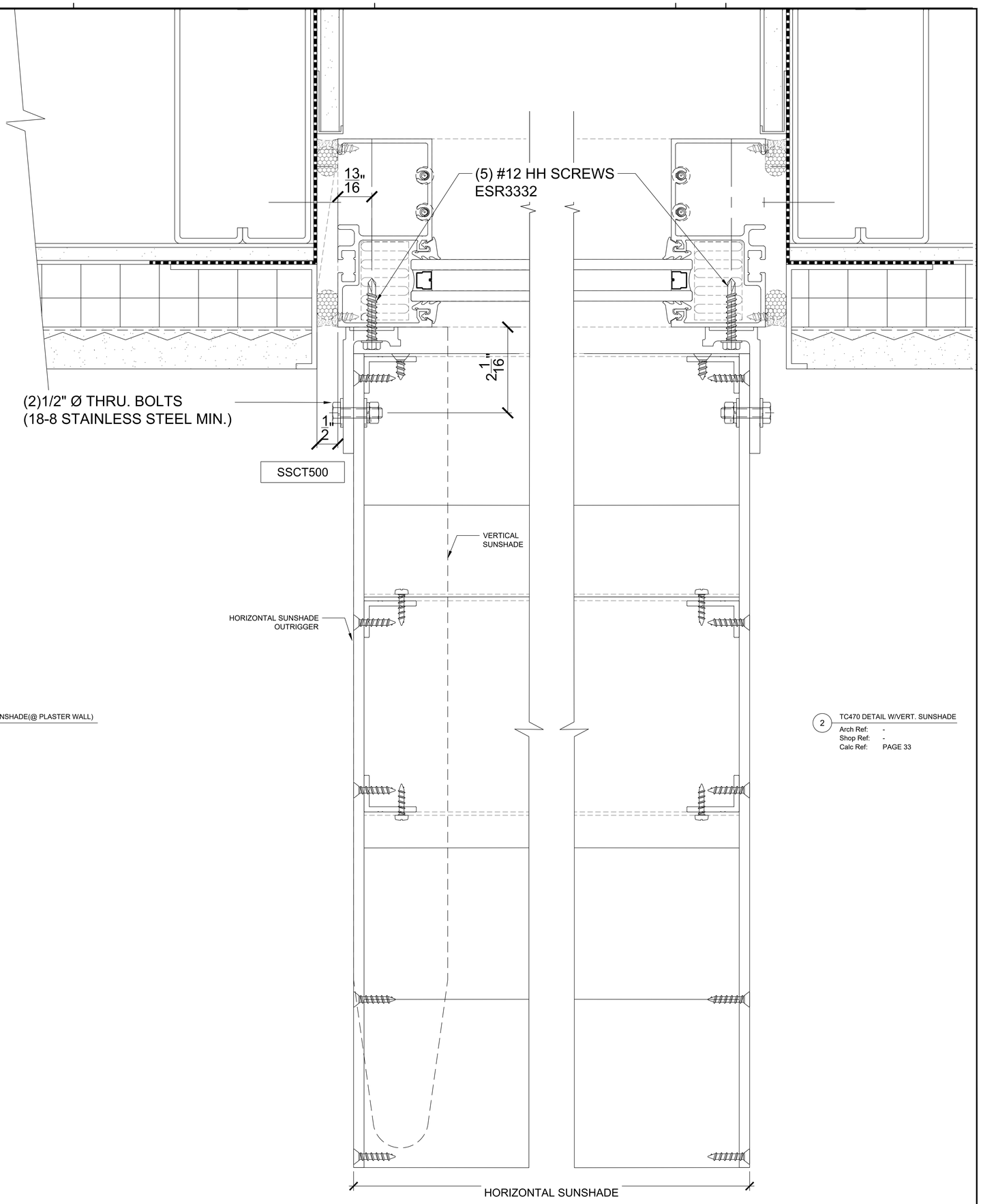

2 TC470 DETAIL W/VERT. SUNSHADE

Arch Ref: -
Shop Ref: -
Calc Ref: PAGE 33

IDENTIFICATION STAMP
DIV. OF THE STATE ARCHITECT
APP. 03-119458 INC:
REVIEWED FOR
SS ☑ FLS ☑ ACS ☑
DATE:05/23/2019

DIVISION OF STATE ARCHITECT
355 South Grand Avenue, Suite 2100
Los Angeles, California. 90012
ph: (213) 897-3995 Fax: (213) 897-3159
agency

tBP architecture planning interiors

tBP/Architecture
4611 Teller Avenue
Newport Beach, CA 92660
ph: 949.673.0300 fx: 949.732.3895
architect

REGISTERED PROFESSIONAL ENGINEER
CRAIG W. HORNER
No. 84674
CIVIL
STATE OF CALIFORNIA
04/12/19

consultant

COMPTON COLLEGE
INSTRUCTIONAL BUILDING No. 2

COMPTON COMMUNITY COLLEGE DISTRICT
1111 E. ARTESIA BLVD. COMPTON, CA.

owner

tBP project number : 20998.00
file name:
drawn by: checked by:
date: 10/20/18

Rev:	date:	description:

THIS DRAWING AND THE DESIGNS, DEPICTIONS, IDEAS AND OTHER INFORMATION CONTAINED HEREIN CONSTITUTE UNPUBLISHED WORK OF tBP/ARCHITECTURE AND SHALL REMAIN THE PROPERTY OF tBP/ARCHITECTURE IN PERPETUITY. NO PART THEREOF SHALL BE REPRODUCED, DISCLOSED, DISTRIBUTED, SOLD, PUBLISHED OR OTHERWISE USED IN ANY WAY WITHOUT THE ADVANCED EXPRESS WRITTEN CONSENT OF tBP/ARCHITECTURE.

SCALE : FULL

drawing title:
VERTICAL DETAILS
(TC-470)

drawing no.:
CW9.02

drawing of

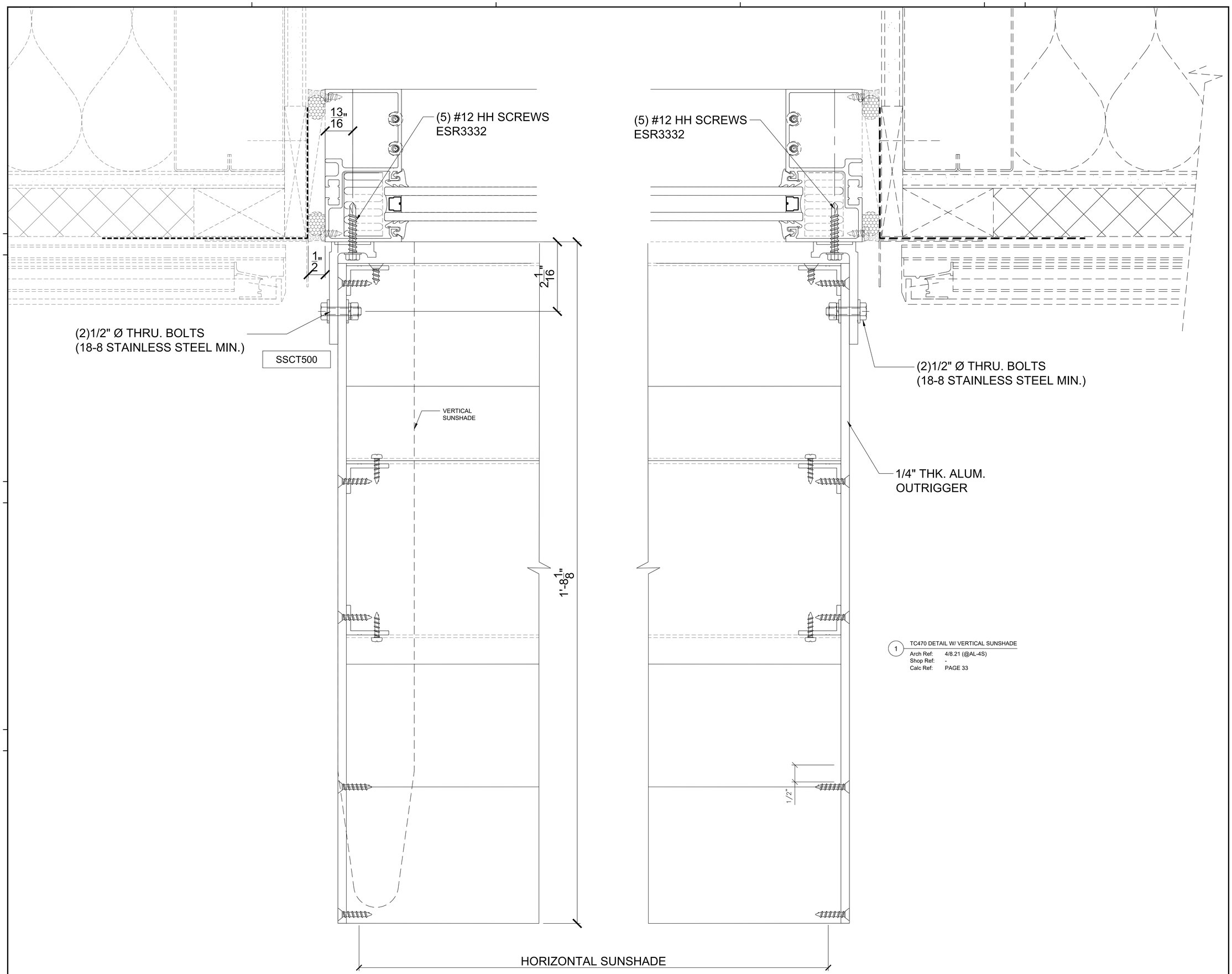

1 TC470 DETAIL W/ VERTICAL SUNSHADE
Arch Ref: 4/8.21 (@AL-4S)
Shop Ref: -
Calc Ref: PAGE 33

IDENTIFICATION STAMP
DIV. OF THE STATE ARCHITECT
APP. 03-119458 INC:
REVIEWED FOR
SS ☑ FLS ☑ ACS ☑
DATE:05/23/2019

DIVISION OF STATE ARCHITECT
355 South Grand Avenue, Suite 2100
Los Angeles, California. 90012
ph: (213) 897-3995 Fax: (213) 897-31
agen

tBP architecture planning interiors

tBP/Architecture
4611 Teller Avenue
Newport Beach, CA 92660
ph: 949 673 0900 fx: 949 752 3805
archite

REGISTERED PROFESSIONAL ENGINEER
CRAIG M. HORNER
No. 84674
CIVIL
STATE OF CALIFORNIA
04/12/19

consulta

COMPTON COLLEGE
INSTRUCTIONAL BUILDING No. 2

COMPTON COMMUNITY COLLEGE DISTRICT
1111 E. ARTESIA BLVD. COMPTON, CA.

own

tBP project number : 20998.00
file name:
drawn by: checked by:
date: 10/20/18

Rev:	date:	description:

THIS DRAWING AND THE DESIGNS, DEPICTIONS, IDEAS AND INFORMATION CONTAINED HEREIN CONSTITUTE UNPUBLISHED WORK OF tBP/ARCHITECTURE AND SHALL REMAIN THE PROPERTY OF tBP/ARCHITECTURE IN PERPETUITY. NO PART THEREOF SHALL BE REPRODUCED, DISCLOSED, DISTRIBUTED, SOLD, PUBLISHED OR OTHERWISE USED IN ANY WAY WITHOUT THE ADVANCED EXPRESS WRITTEN CONSENT OF tBP/ARCHITECTURE.

SCALE : FULL

drawing title:
VERTICAL DETAILS
(TC-470)

drawing no.:
CW9.03
drawing of

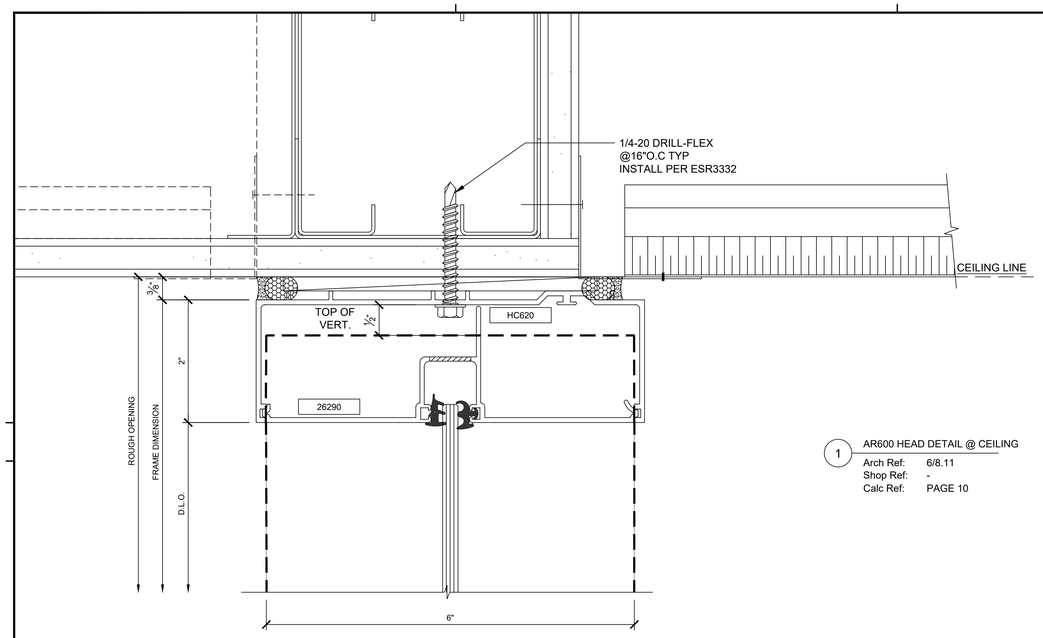

1 AR600 HEAD DETAIL @ CEILING
Arch Ref: 6/8.11
Shop Ref: -
Calc Ref: PAGE 10

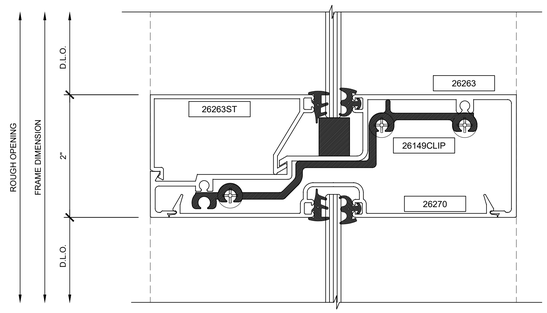

2 AR600 HORIZONTAL DETAIL
Arch Ref: 12/8.11 HORIZ. SIM.
Shop Ref: -
Calc Ref: -

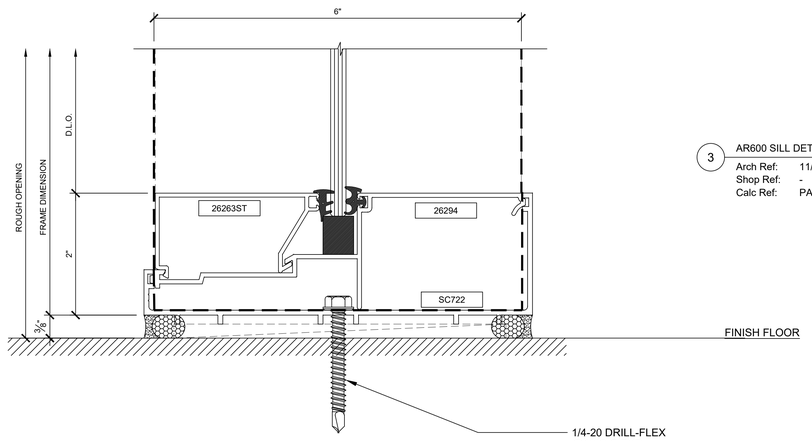

3 AR600 SILL DETAIL@ FINISH FLOOR
Arch Ref: 11/8.11
Shop Ref: -
Calc Ref: PAGE 10

IDENTIFICATION STAMP
DIV. OF THE STATE ARCHITECT
APP. 03-119458 INC:
REVIEWED FOR
SS ☑ FLS ☑ ACS ☑
DATE:05/23/2019

DIVISION OF STATE ARCHITECT
355 South Grand Avenue, Suite 2100
Los Angeles, California. 90012
ph: (213) 897-3995 Fax: (213) 897-3159
agency

tBP
architecture
planning
interiors
tBP/Architecture
4611 Teller Avenue
Newport Beach, CA 92660
ph: 949.673.0300 fx: 949.732.3885
architect

REGISTERED PROFESSIONAL ENGINEER
CURTIS M. ROBINSON
No. 84674
CIVIL
STATE OF CALIFORNIA
04/12/19
consultant

COMPTON COLLEGE
INSTRUCTIONAL BUILDING No. 2
COMPTON COMMUNITY COLLEGE DISTRICT
1111 E. ARTESIA BLVD. COMPTON, CA.
owner

tBP project number : 20998.00
file name:
drawn by: checked by:
date: 10/20/18

Rev:	date:	description:

THIS DRAWING AND THE DESIGNS, DEPICTIONS, IDEAS AND OTHER INFORMATION CONTAINED HEREIN CONSTITUTE UNPUBLISHED WORK OF tBP/ARCHITECTURE AND SHALL REMAIN THE PROPERTY OF tBP/ARCHITECTURE IN PERPETUITY. NO PART THEREOF SHALL BE REPRODUCED, DISCLOSED, DISTRIBUTED, SOLD, PUBLISHED OR OTHERWISE USED IN ANY WAY WITHOUT THE ADVANCED EXPRESS WRITTEN CONSENT OF tBP/ARCHITECTURE.
SCALE : FULL

drawing title:
HORIZONTAL DETAILS
AR600

drawing no.:
CW10.01

drawing of

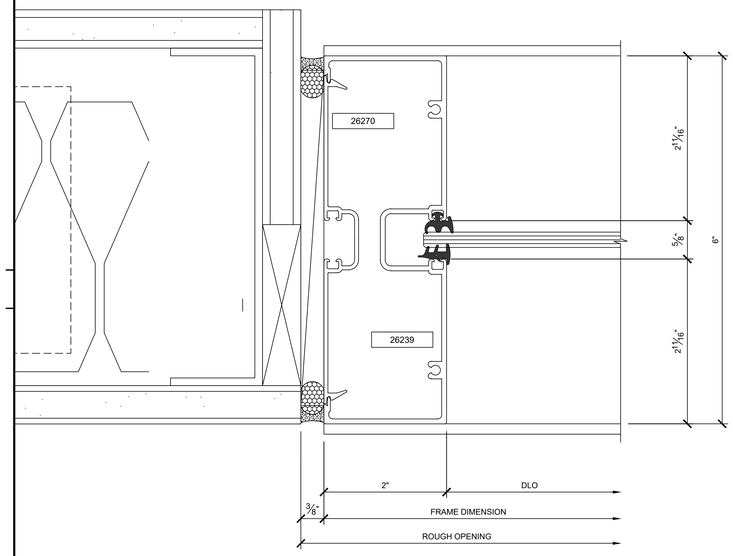

1 AR600 JAMB DETAIL@ VERTICAL

Arch Ref: 1/8.11 SIM.
Shop Ref: -
Calc Ref: -

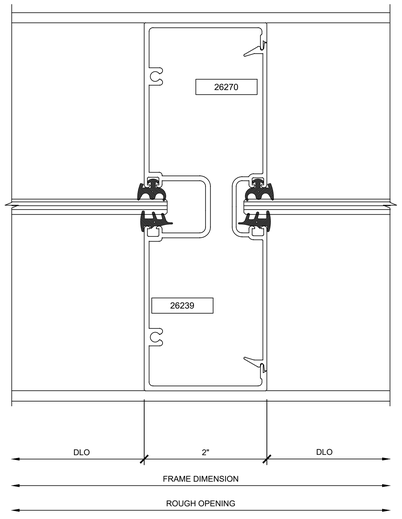

2 AR600 INTE.VERTICAL DETAIL

Arch Ref: 12/8.11 SIM.
Shop Ref: -
Calc Ref: -

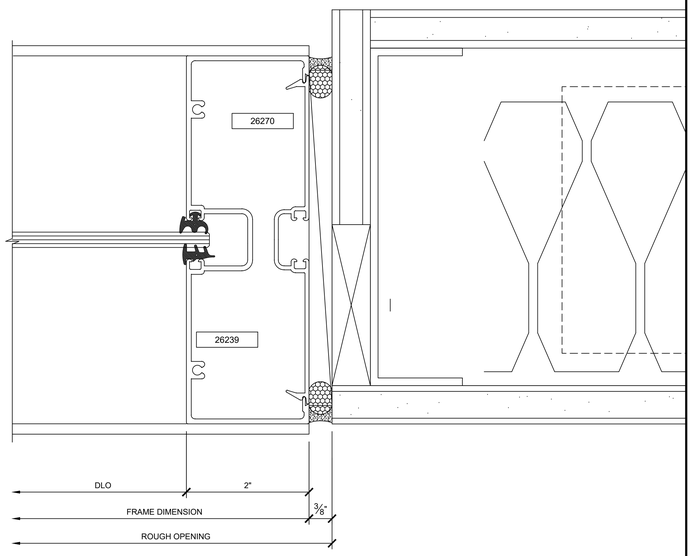

2 AR600 JAMB DETAIL

Arch Ref: 12/8.11 SIM.
Shop Ref: -
Calc Ref: -

IDENTIFICATION STAMP
DIV. OF THE STATE ARCHITECT
APP. 03-119458 INC:
REVIEWED FOR
SS ☑ FLS ☑ ACS ☑
DATE:05/23/2019

DIVISION OF STATE ARCHITECT
355 South Grand Avenue, Suite 2100
Los Angeles, California. 90012
ph: (213) 897-3995 Fax: (213) 897-3159
agency

tBP
architecture
planning
interiors

tBP/Architecture
4611 Teller Avenue
Newport Beach, CA 92660
ph: 949.673.0300 fx: 949.732.3895
architect

REGISTERED PROFESSIONAL ENGINEER
CRAIG M. HORNER
No. 84674
CIVIL
STATE OF CALIFORNIA
04/12/19
consultant

COMPTON COLLEGE
INSTRUCTIONAL BUILDING No. 2

COMPTON COMMUNITY COLLEGE DISTRICT
1111 E. ARTESIA BLVD. COMPTON, CA.

owner

tBP project number : 20998.00
file name:
drawn by: checked by:
date: 10/20/18

Rev:	date:	description:

THIS DRAWING AND THE DESIGNS, DEPICTIONS, IDEAS AND OTHER INFORMATION CONTAINED HEREIN CONSTITUTE UNPUBLISHED WORK OF tBP/ARCHITECTURE AND SHALL REMAIN THE PROPERTY OF tBP/ARCHITECTURE IN PERPETUITY. NO PART THEREOF SHALL BE REPRODUCED, DISCLOSED, DISTRIBUTED, SOLD, PUBLISHED OR OTHERWISE USED IN ANY WAY WITHOUT THE ADVANCED EXPRESS WRITTEN CONSENT OF tBP/ARCHITECTURE.

SCALE : FULL

drawing title:
VERTICAL DETAILS
AR600

drawing no.:
CW11.01

drawing of